2753 Michigan Road • Madison, Indiana 47250 • 855-743-3427

INSTALLATION INSTRUCTIONS

2” Offset High Clearance A-Arms:

for Can-Am Defender

A Press or Ball Joint tool is required to remove and install Ball Joints.

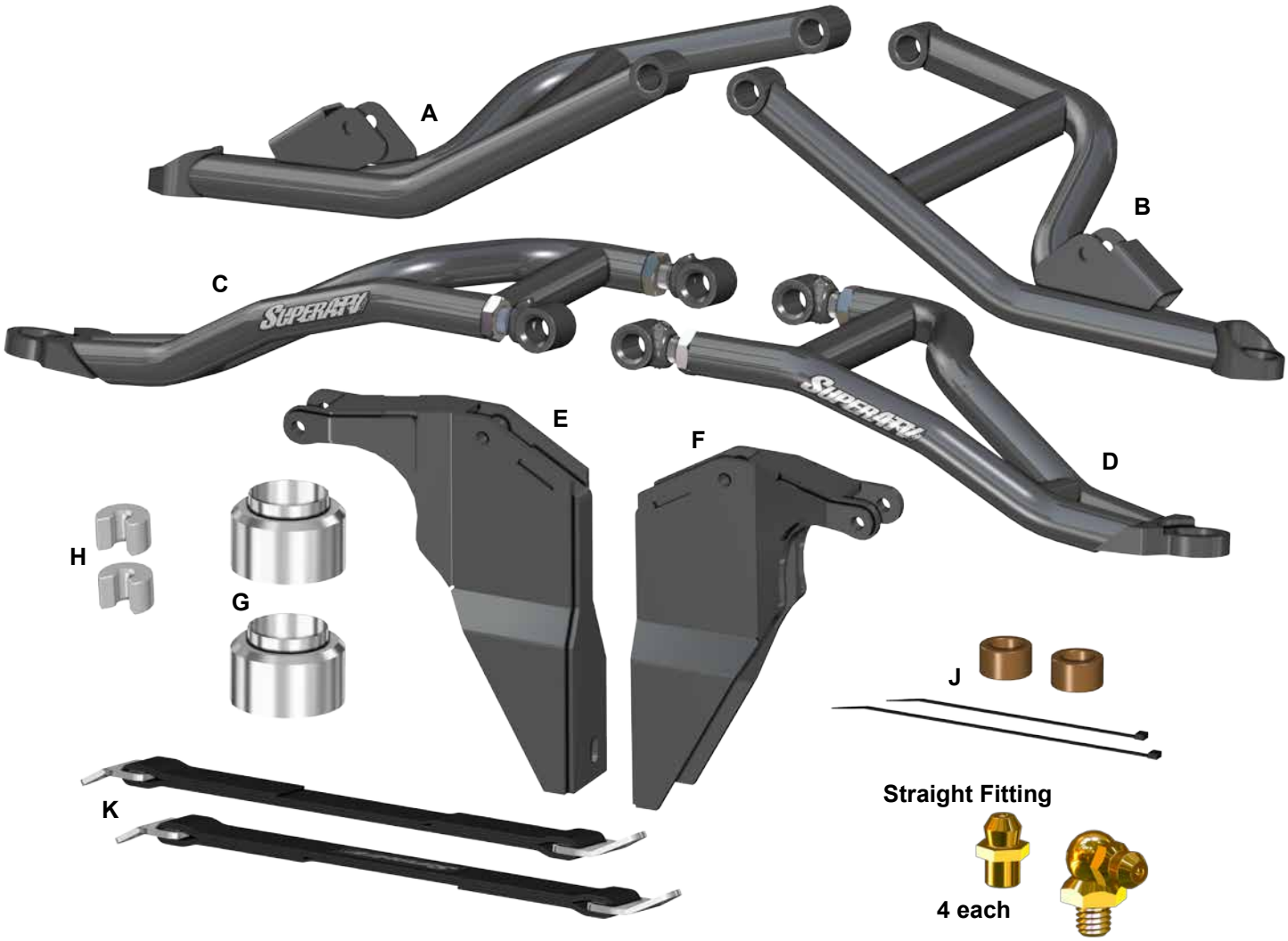

Item	Description	Item	Description
A	Upper Right	F	Left Shock Bracket
B	Upper Left	G	Rear Spacer x 2
C	Lower Right	H	Front Shock Stop x 2
D	Lower Left	J	Steering Stop Kit
E	Right Shock Bracket	K	Limit Strap x 2

SuperATV strongly recommends using a Spring Compressor when removing/installing Springs from Shocks.

Need help with your installation?

sales@superatv.com
www.superatv.com
1-855-743-3427
8:00am - 8:00pm EST M-Th
8:00am - 7:00pm EST Friday
9:00am - 2:00pm EST Saturday

Read instructions and view illustrations before beginning.

Thank You For Choosing

© 2019 SuperATV.com®. All Rights Reserved.

Rev IN-AA-CA-DEF-2-HC / IN-AA-CA-DEF-BFT-001 10/7/2022

Front Removal: *Keep all components removed from machine.*

- From both sides of machine, remove components shown.

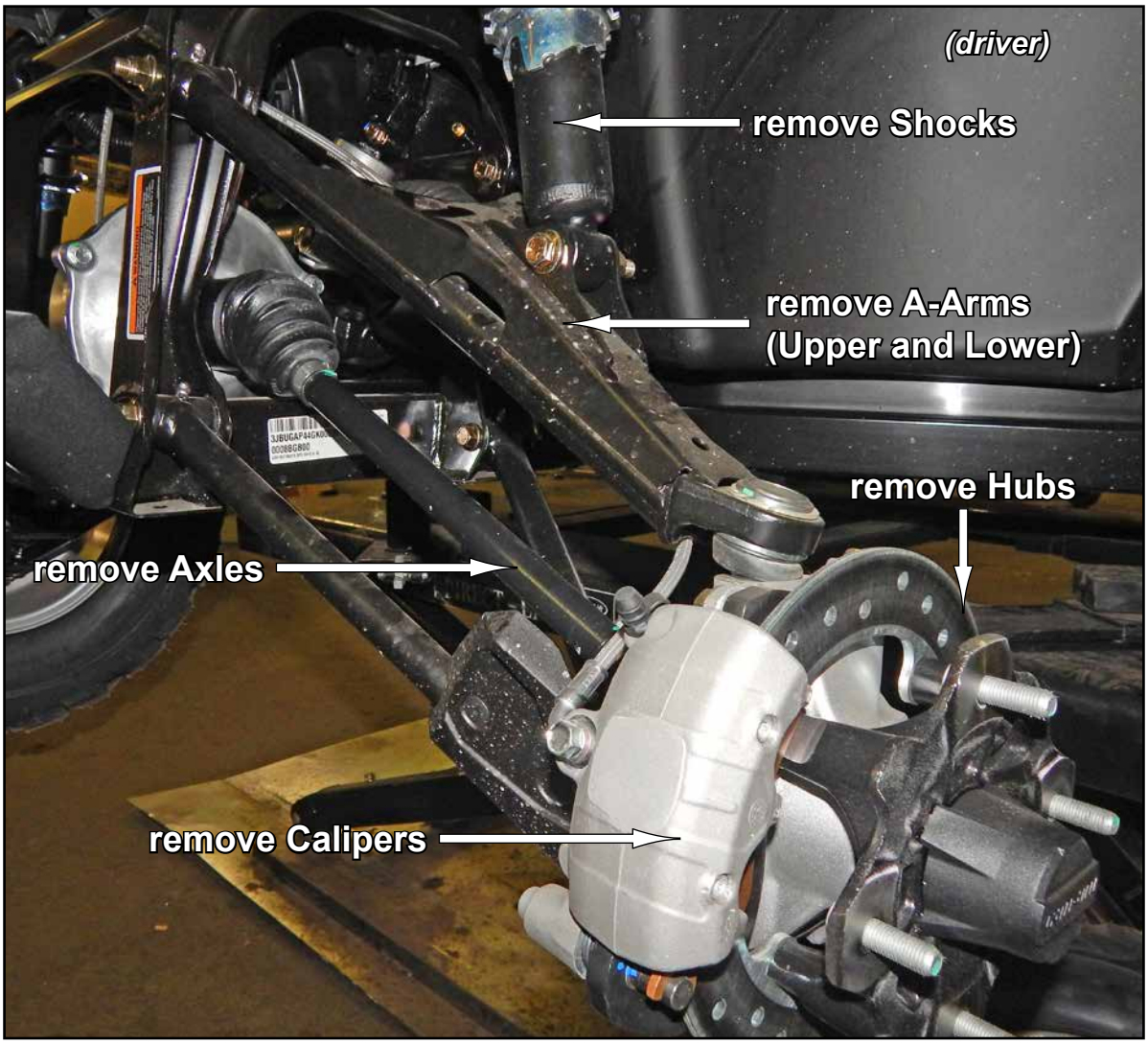

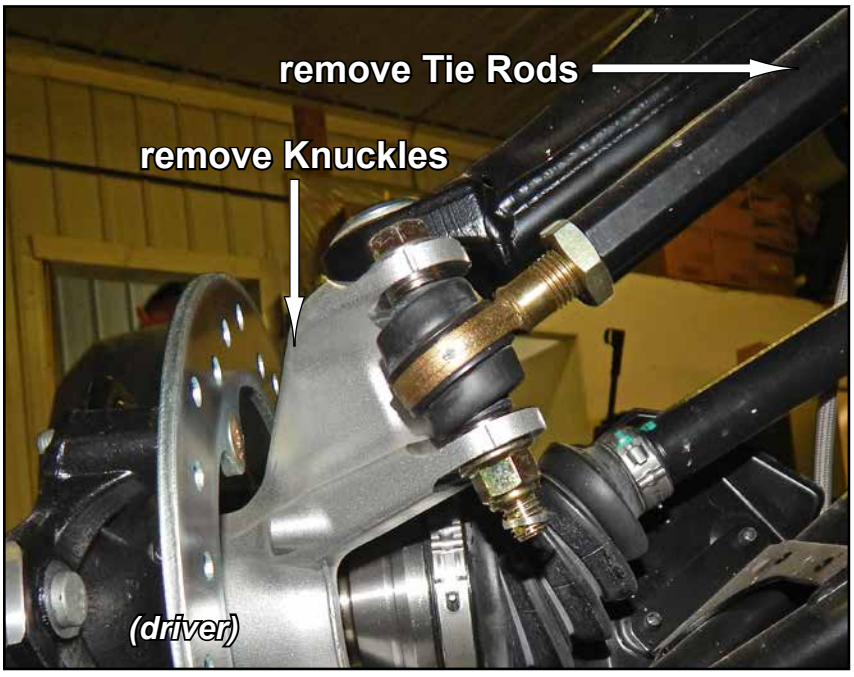

Tip: rotate Knuckle and use setup shown when removing/installing from Upper Arm.



Rear Removal: *Keep all components removed from machine.*

- From both sides of machine, remove Shocks.

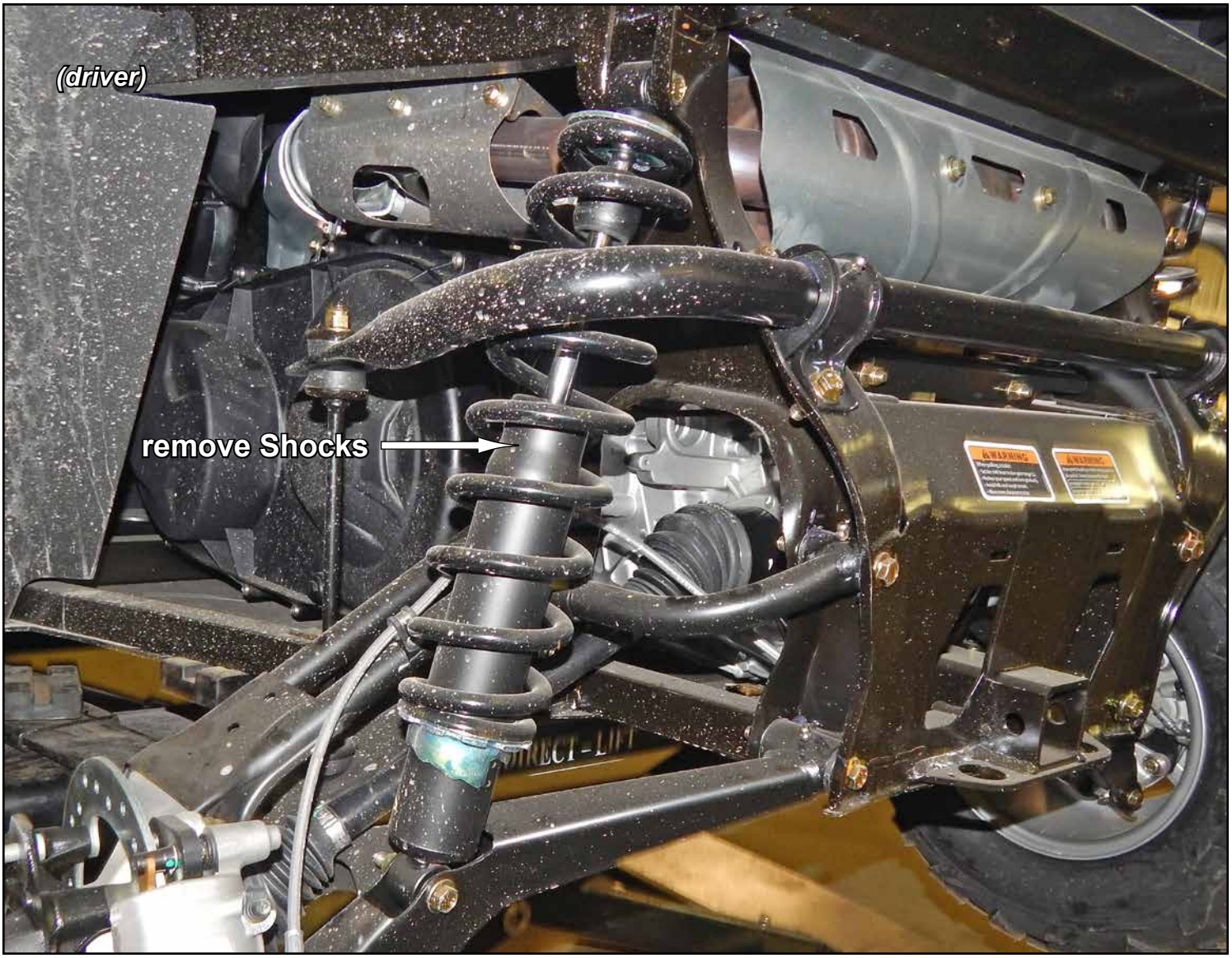

- Place Rear Shock in Spring Compressor and remove Retainer and Spring.



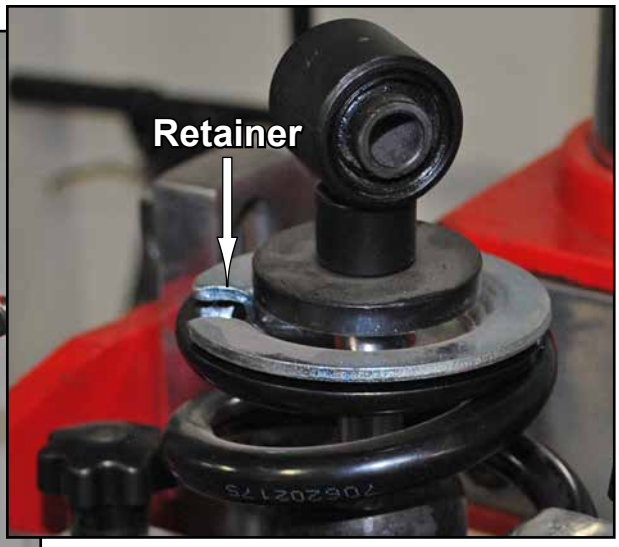

- Install appropriate Rear Spacer (G) as shown.
- Reinstall Spring and Retainer.
- Remove Shock and repeat steps for remaining Shock.
- Set Shocks aside.

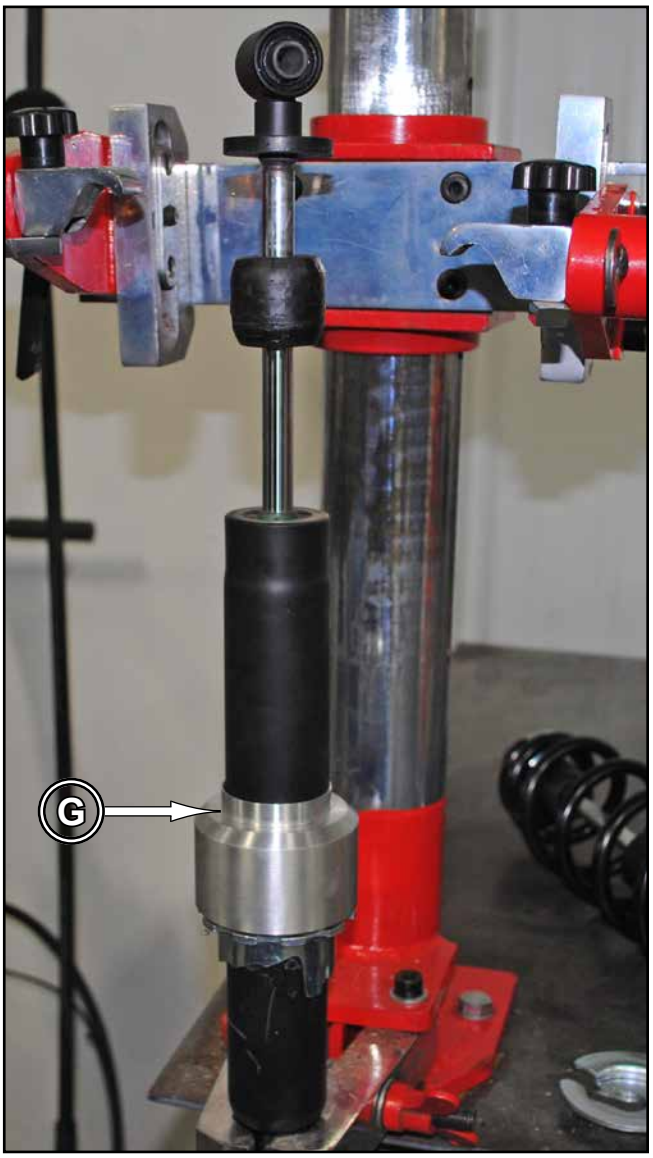

PIVOT BLOCK SETTINGS

- Place new A-Arms onto a flat surface and verify dimension shown.
- *Negative 1° camber setting is achieved when Pivot Blocks are set to this dimension.*
- See last page for additional camber information.

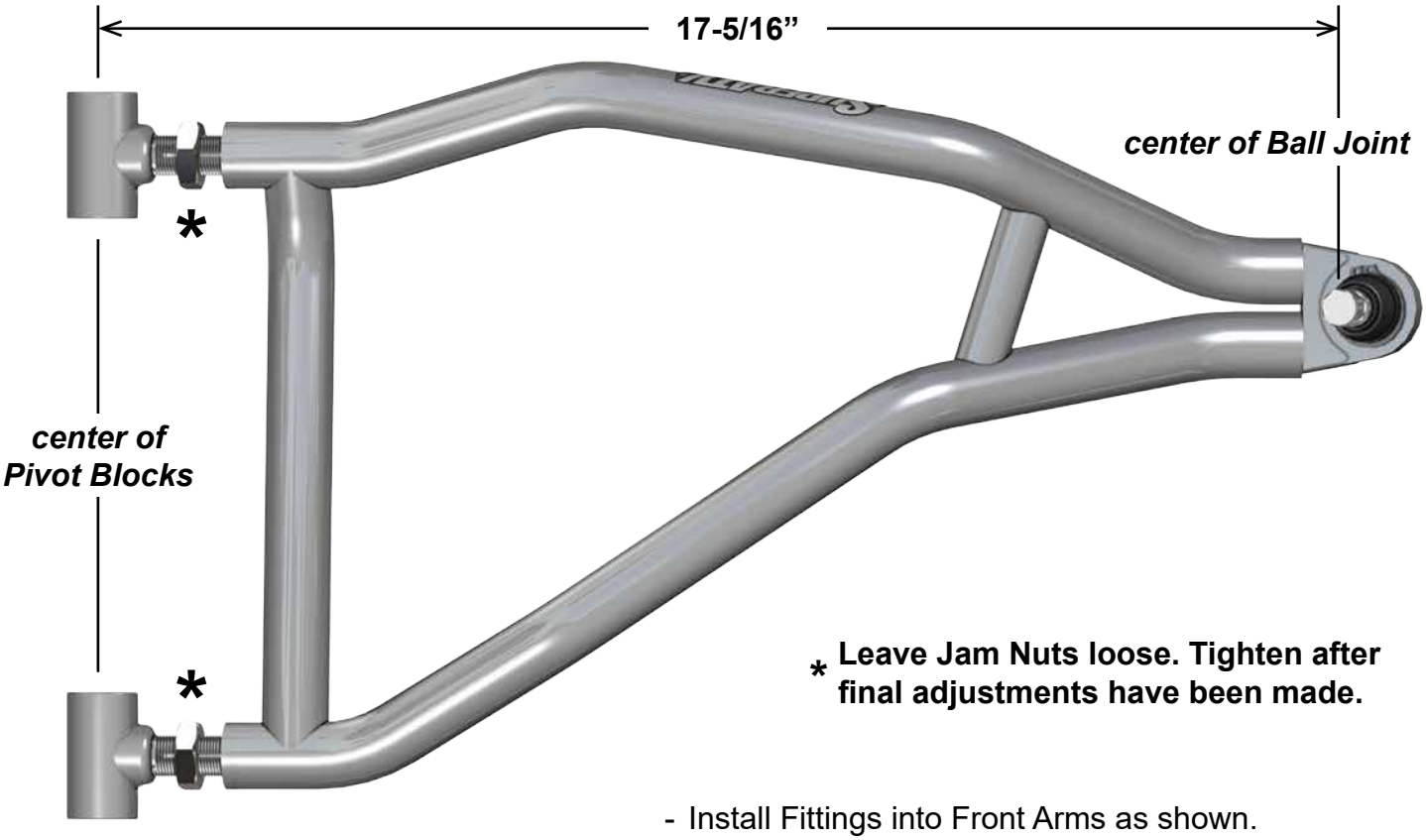

*** Leave Jam Nuts loose. Tighten after final adjustments have been made.**

- Install Fittings into Front Arms as shown.
- Install stock Ball Joints into Front Arms.
- Install stock Bushings.

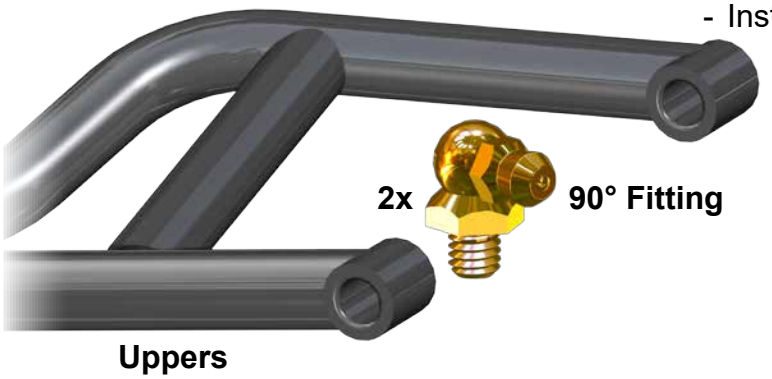

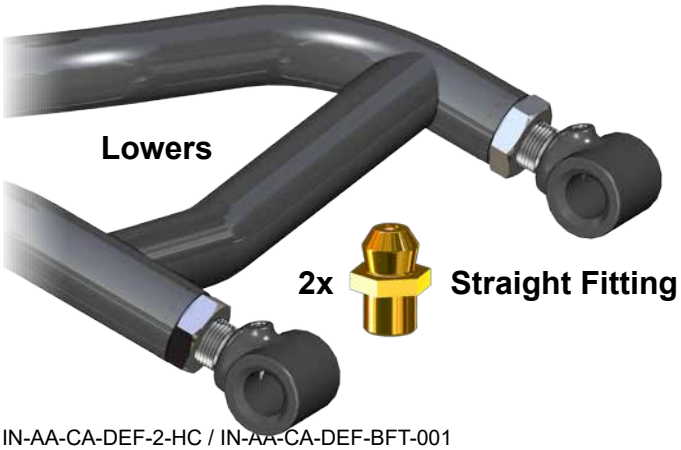

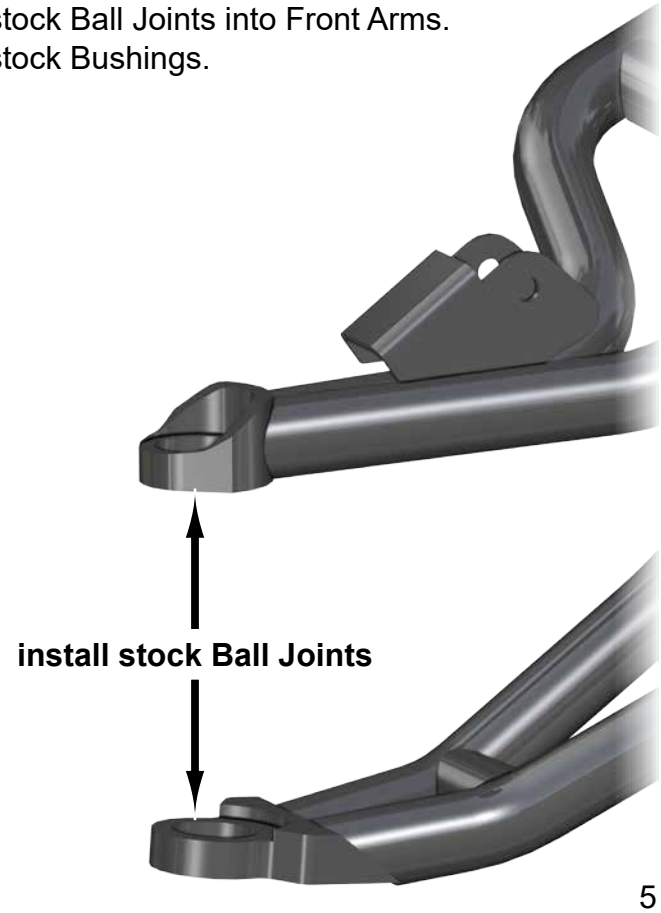

- Install Front Shock Stop (H) as shown.
- Remove Shock and repeat steps for opposite Shock.
- Set Front Shocks aside.

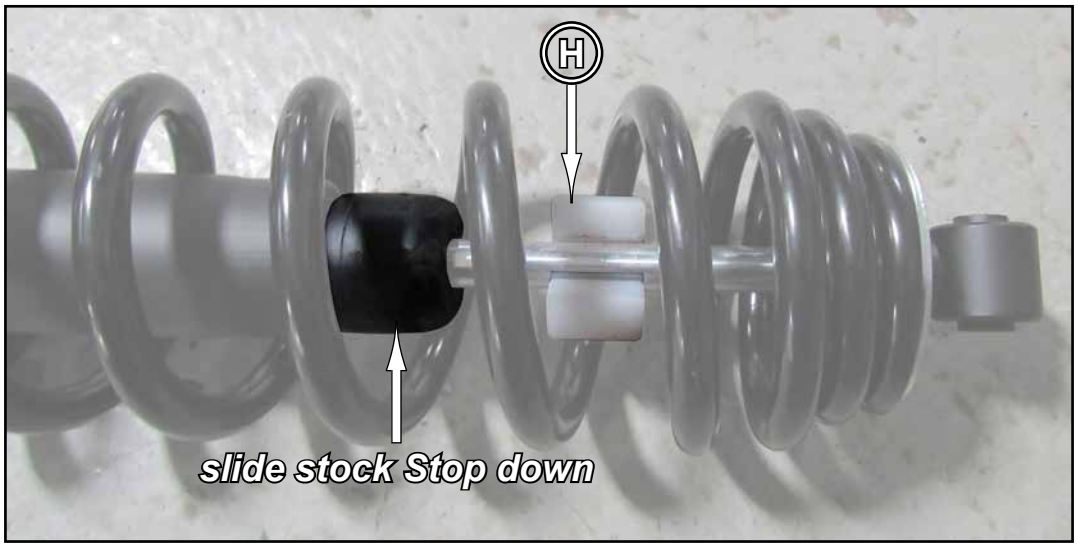

(Driver Side installation is shown)

- Install Steering Stop (J) onto Rack and Pinion Shaft.
- Repeat for opposite side.
- Reinstall Tie Rods.



- Install Left Shock Bracket (F) to Shock Mount with stock Shock hardware and hardware shown.
- Install Upper Left (B) to Frame with stock hardware. SuperATV recommends using Loc-Tite on nuts.

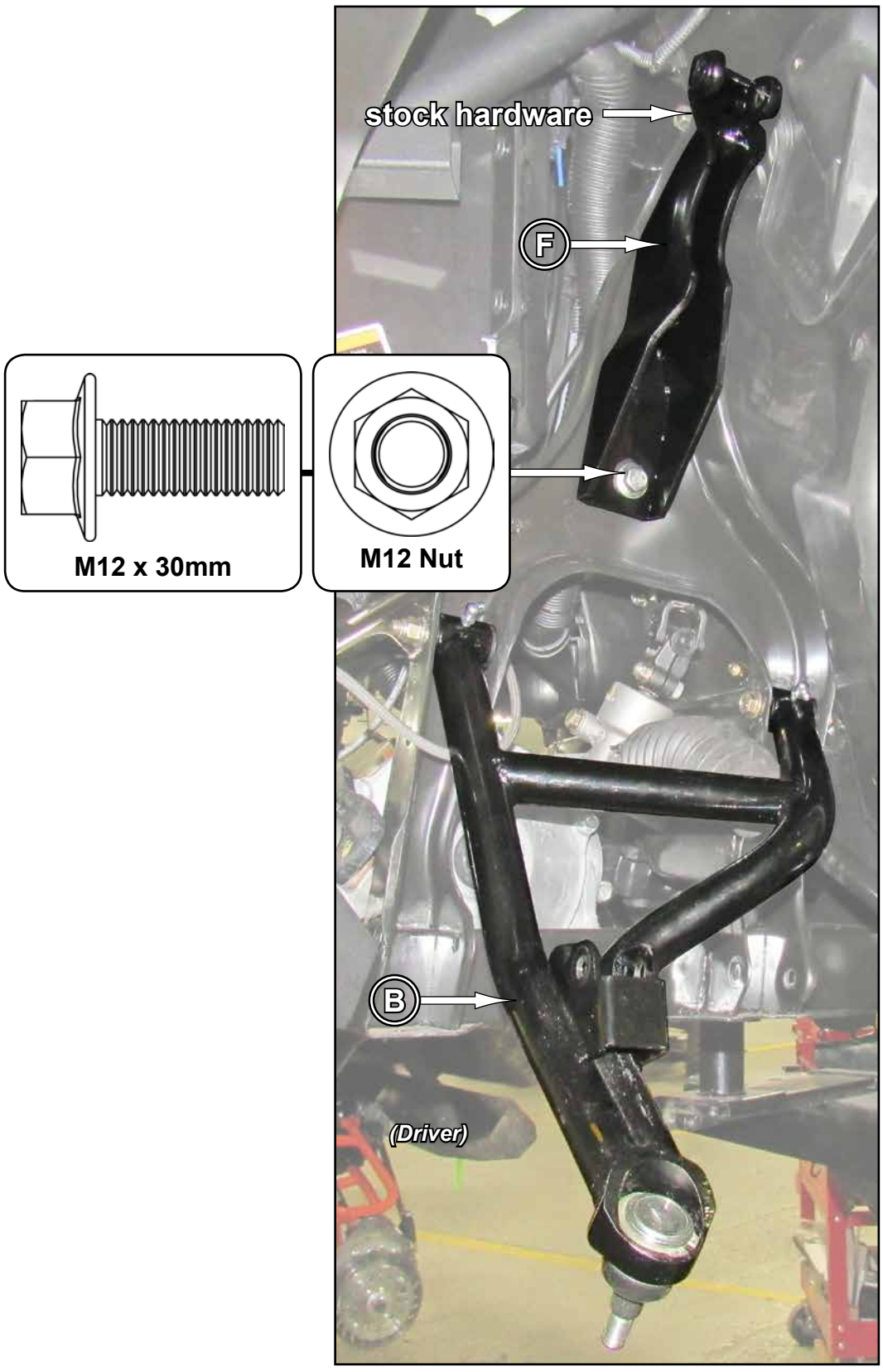

- Reinstall Knuckle to Upper Left (B) with stock hardware.
- Reinstall Axle.





- Install Lower Left (D) to Frame with stock hardware. ***Do not install any Nuts until all final adjustments have been completed.***
- Secure Lower Left (D) to Knuckle with stock hardware. ***Do not install Nut until all final adjustments have been completed.***
- Reinstall Hub and Caliper.
- Repeat steps for opposite side.

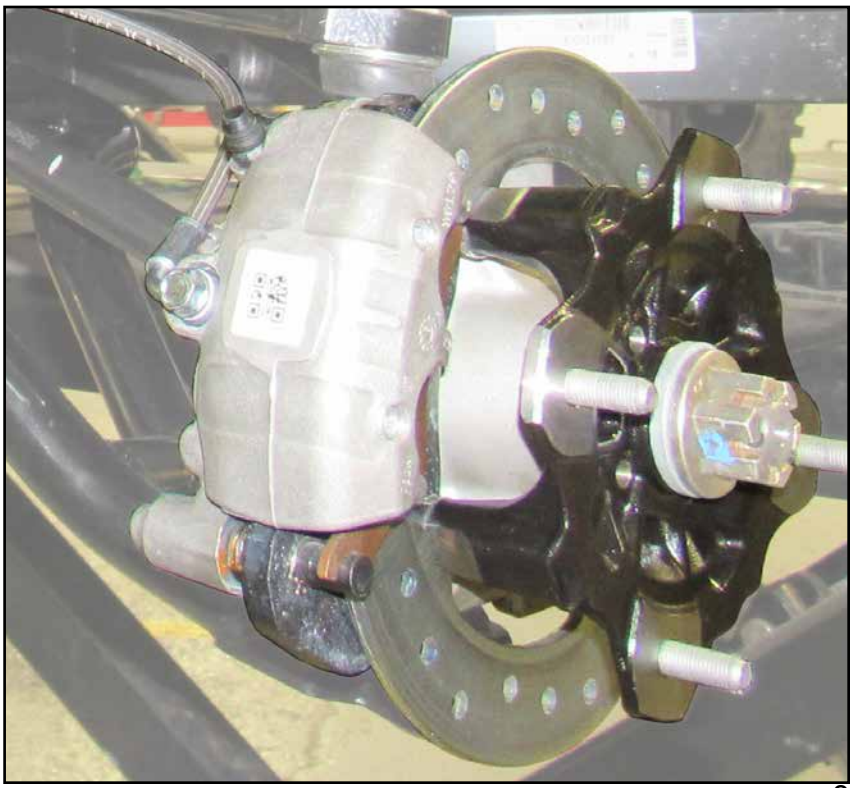

- Install Shock and Limit Strap (K) with hardware shown.

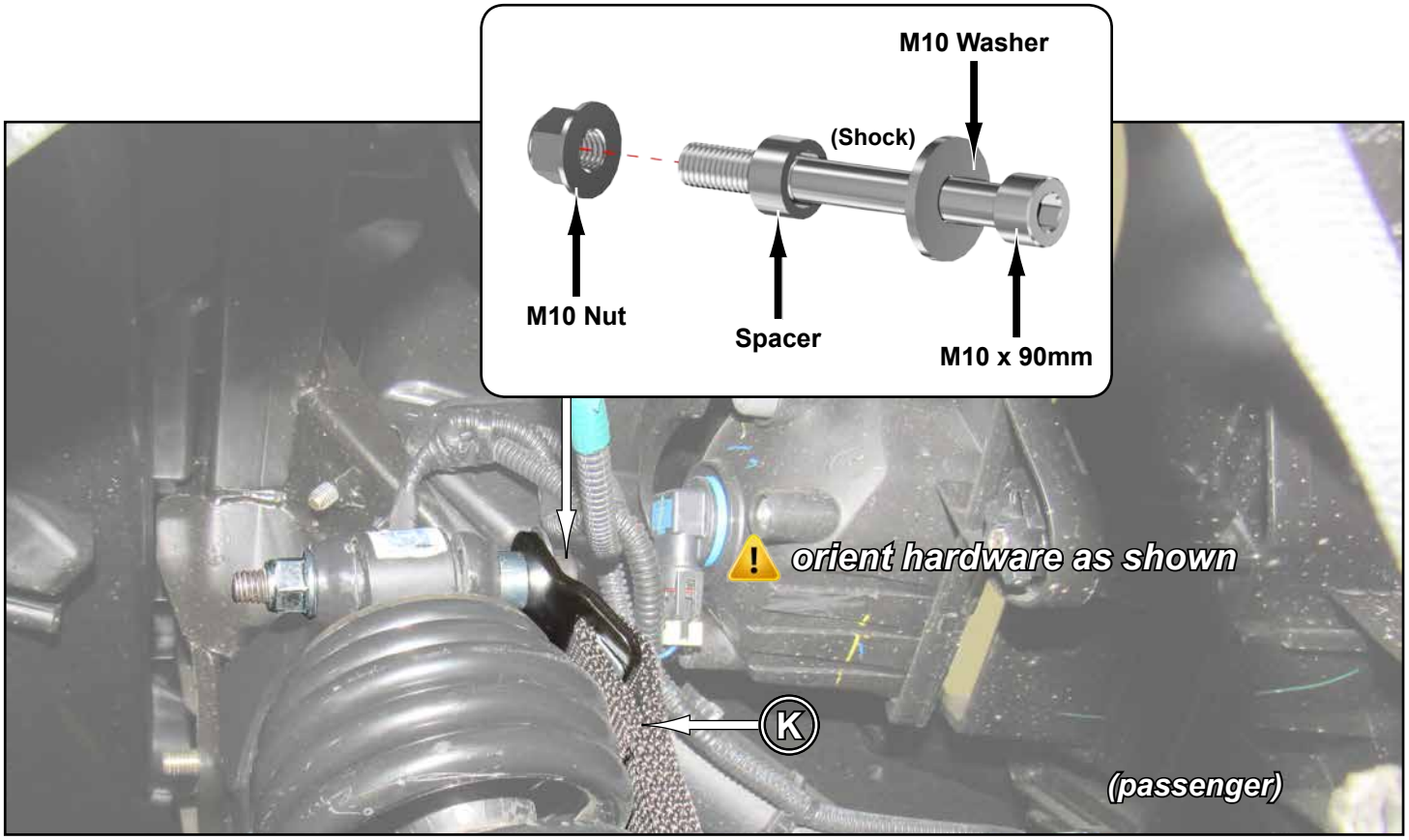

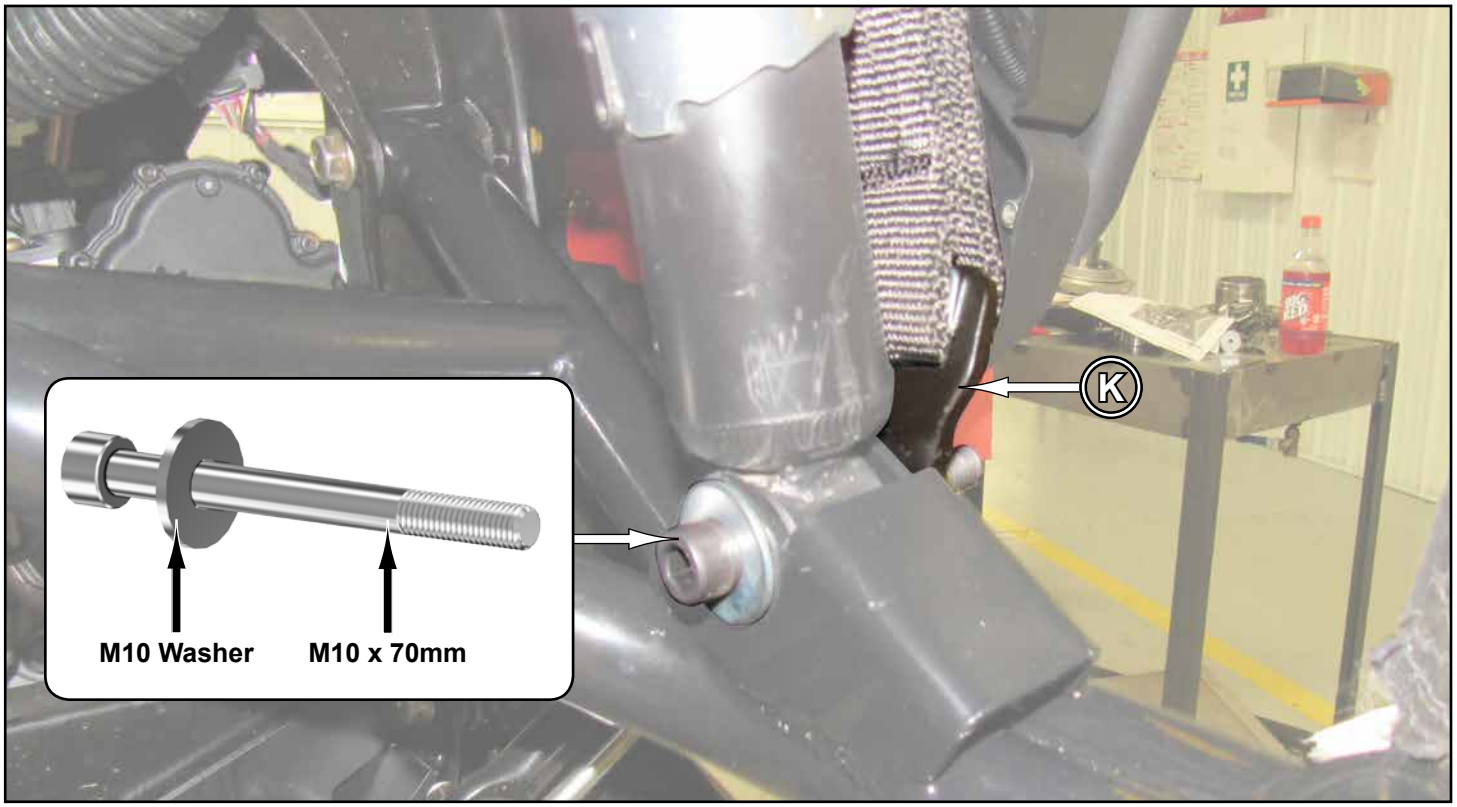

- Repeat steps for opposite side.

- Reinstall Tires and check Camber settings; see last page.
- Add Nuts to previously installed hardware and tighten completely. SuperATV recommends using Loc-Tite on Nuts.
- Secure Limit Straps (K) and Brake Lines with hardware shown.

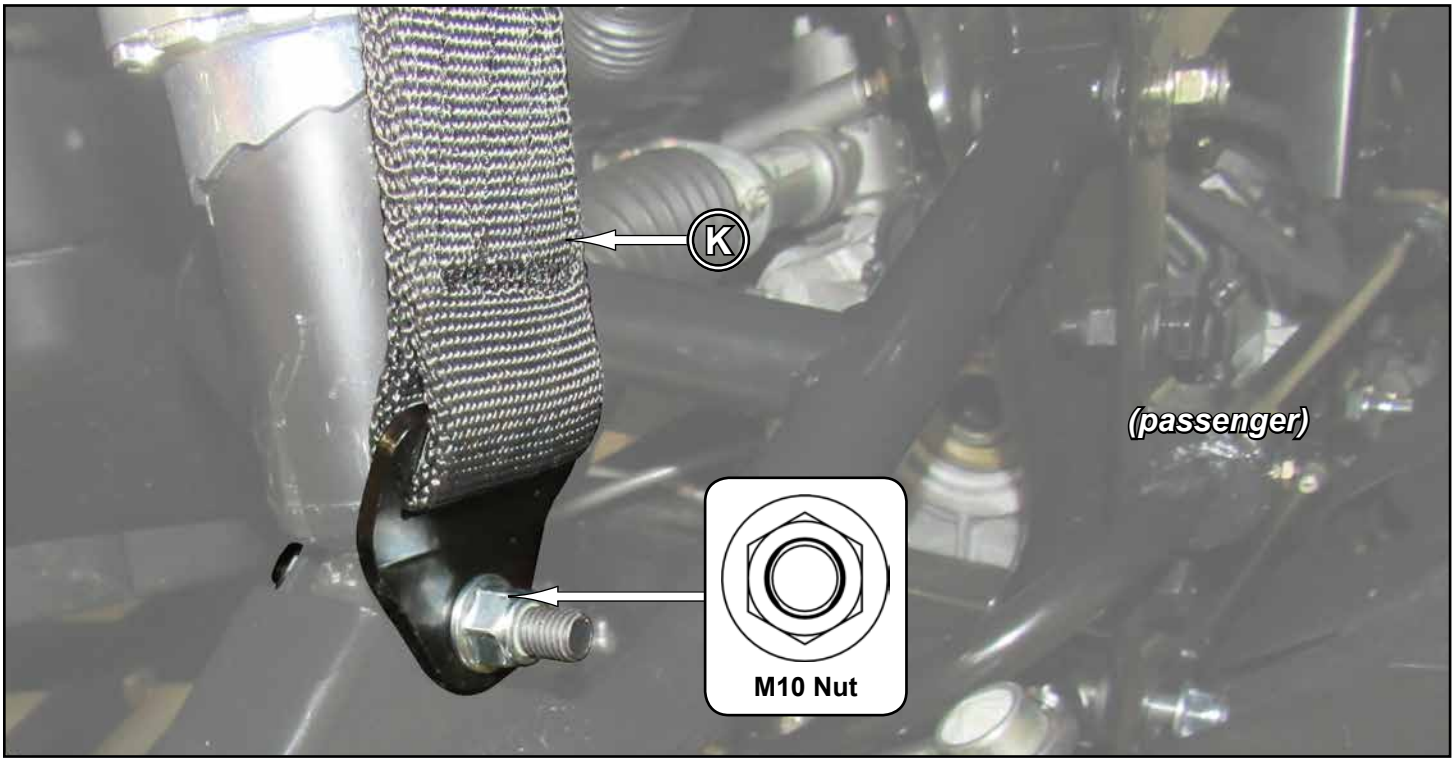

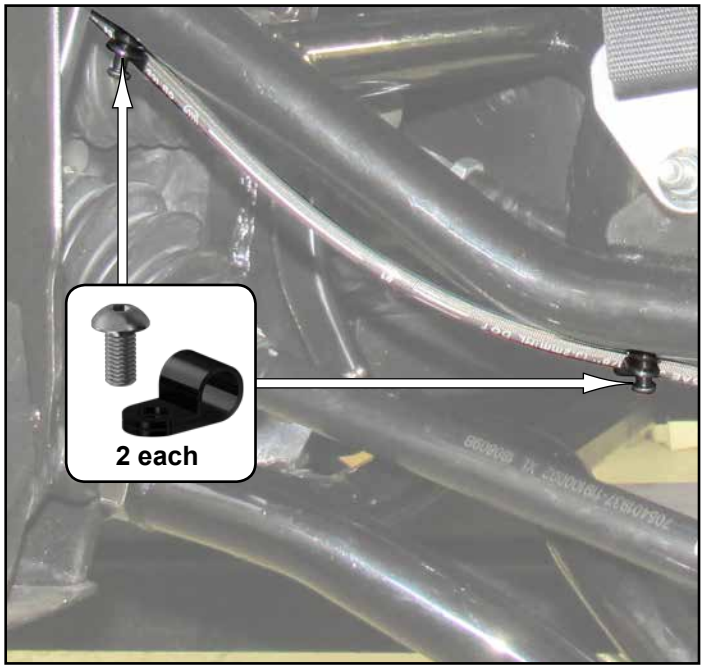

- Reinstall Rear Shocks with stock hardware.



Liability Statement

SuperATV's® products are designed to best fit user's ATV/UTV under stock conditions. Adding, modifying, or fabricating any factory or aftermarket parts will void any warranty provided by SuperATV® and is not recommended. SuperATV's® products could interfere with other aftermarket accessories. If user has aftermarket products on machine, contact SuperATV® to verify that they will work together.

Although SuperATV® has thousands of satisfied customers, user should be aware that installing lift kits, long travel, or suspension kits, tires, etc. will change the ride of machine and may increase maintenance and part wear. Operating any off-road machine while, or after, consuming alcohol and/or drugs increases risk of bodily harm or death. No warranty or representation is made as to this product's ability to protect user from severe injury or death. SuperATV® urges operators and occupants to wear a helmet and appropriate riding gear at all times.

By purchasing and installing SuperATV® products, user agrees that should damages occur, SuperATV® will not be held responsible for loss of time, use, labor fees, replacement parts, or freight charges. SuperATV®, nor any 3rd party, will not be held responsible for any direct, indirect, incidental, special, or consequential damages that result from any product purchased from SuperATV®. The total liability of seller to user for all damages, losses, and causes of action, if any, shall not exceed the total purchase price paid for the product that gave rise to the claim.

SuperATV® will warranty only parts provided by SuperATV®. Any damage or problems with OEM housings, bearings, seals, or other manufacturers' products will not be covered by SuperATV®. SuperATV® parts and products are not warrantied if item was not installed properly, misused, or modified.

Installing, adding, modifying, or fabricating any factory or aftermarket product to your ATV/UTV may violate certain local, state, and federal laws. Be advised that laws vary depending on town, city, county, state, etc. Use of certain products on public streets, roads, or highways may be in violation law. The Buyer is solely and exclusively legally and personally responsible for any violation of the law by the installation or use of the product. You must abide by all local, state, and federal laws, including but not limited to vehicle safety, traffic laws, and ordinances. It is your responsibility to know the laws and how they apply to you.

The Buyer is responsible to fully understand the capability and limitations of his/her vehicle according to manufacturer specifications, warnings and instructions and agrees to hold SuperATV® harmless from any damage resulting from failure to adhere to such specifications, warnings and/ or instructions. The Buyer is also responsible to obey all applicable federal, state, and local laws and ordinances when operating his/her vehicle while using this product, and the Buyer agrees to hold SuperATV® harmless from any violation thereof.

CAMBER

- **Tires must have equal air pressure before making adjustments.**
- **Adjustments to be made after all suspension components have been completely assembled.**
- **Tires must not be in contact with ground when making adjustments.**
- **Perform adjustments in small increments.**





Adjusting Camber:

- Remove A-Arms from Frame and turn Pivot Blocks to adjust camber. Reinstall Arms.
- Lower machine and settle suspension components by rolling machine back and forth several feet at a time.
- Check settings and make small adjustments as needed.
- Each time an adjustment is made, machine must be rolled back and forth to settle suspension components.
- Once desired setting is achieved, tighten hardware completely. Loc-tite on Nuts is recommended.

A NEGATIVE CAMBER SETTING OF 1° to 2° IS RECOMMENDED.

LOWER:
Too much positive camber: adjust Pivot Blocks *OUT*.
Too much negative camber: adjust Pivot Blocks *IN*.
note: 2 full turns is 1°

UPPER A-ARMS:
Too much positive camber: adjust Pivot Blocks *IN*.
Too much negative camber: adjust Pivot Blocks *OUT*.
note: 2 full turns is 1°

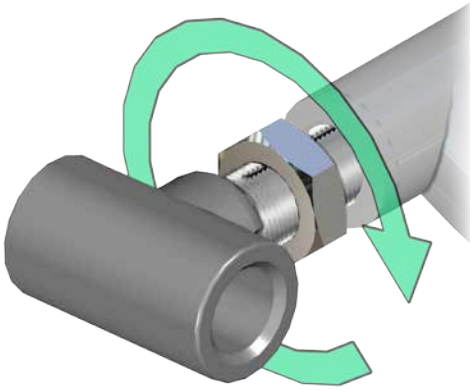

IN-Arm-Settings