ASSAULT INDUSTRIES

INSTALLATION INSTRUCTIONS

CBS-CA-X3-001-01: CARGO RACK SYSTEM

- MAKE SURE THE MODEL ON THE INSTRUCTION SHEET MATCHES YOUR VEHICLE.
- BE SURE TO READ ALL INSTRUCTIONS AND ILLUSTRATIONS BEFORE STARTING.
- DO NOT DISCARD PACKAGING UNTIL PRODUCT HAS BEEN SUCCESSFULLY INSTALLED.

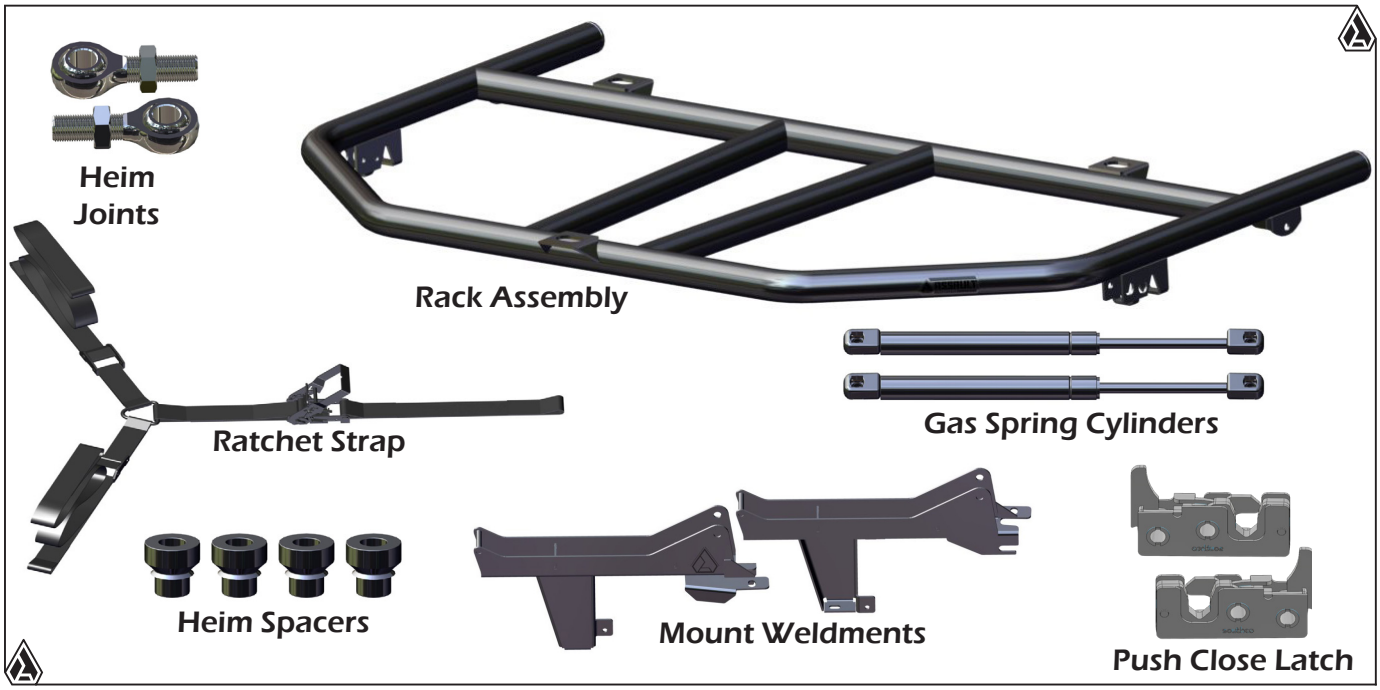


Alum. Spacers (2)pcs


M10 Nylock Nut (2)pcs


M10 Flat Washer (2)pcs


M10x25 Hex Flanged (2)pcs


M12 Nylock Nut (2)pcs


M12 Flat Washer (2)pcs


M12x70 Hex Head (2)pcs


M6 Nylock Nut (2)pcs


M6 Flat Washer (2)pcs


M6x65 Socket Head (2)pcs


1/4-20 Nylock Nut (4)pcs


1/4-20 x 1-1/4" Button (4)pcs


5/16" Nylock Nut (4)pcs


5/16" Flat Washer (4)pcs


10mm Ball Stud (4)pcs



Scan This Code For The Installation Video on YouTube

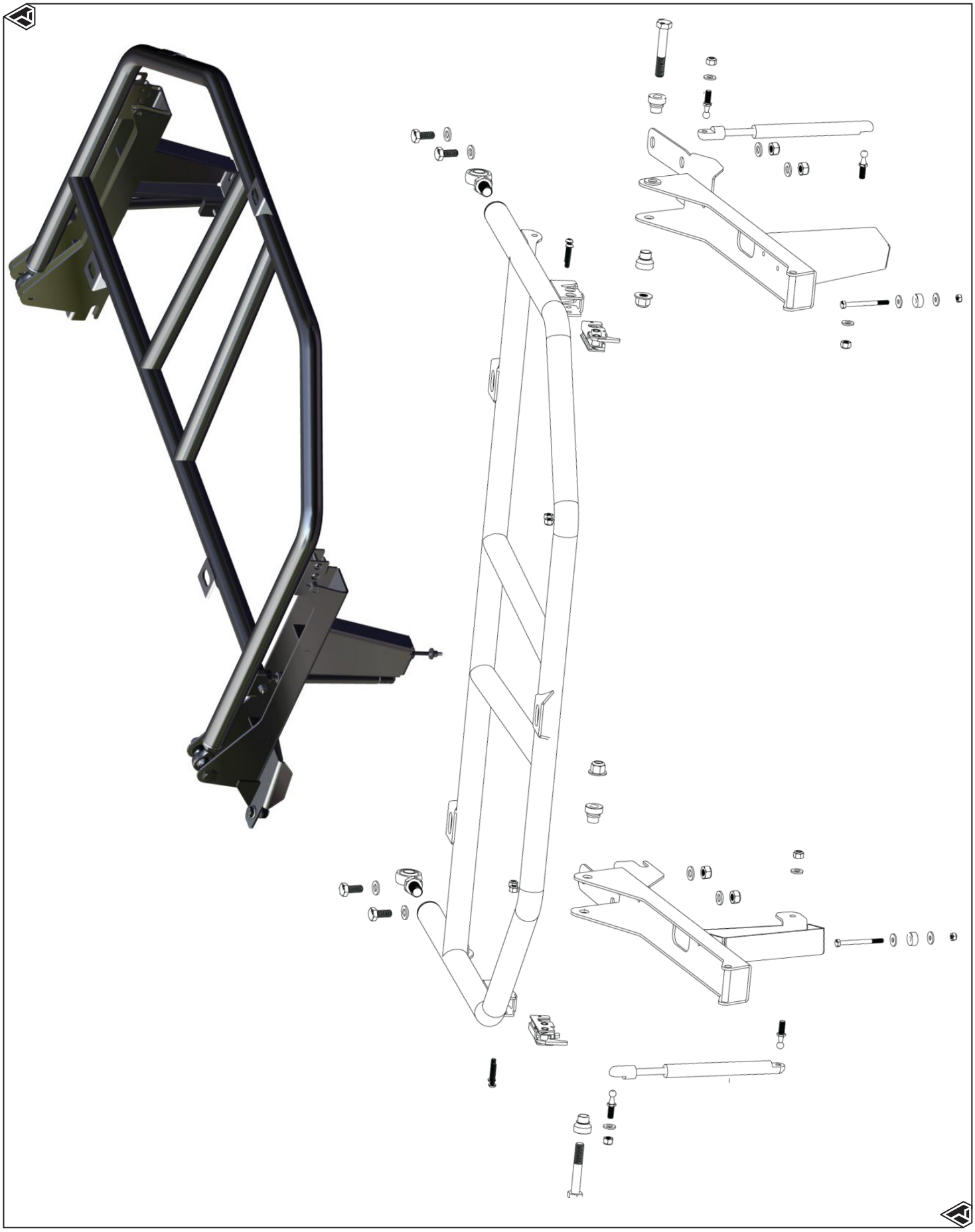



Liability Statement

Assault Industries® products are designed to best fit user's ATV/UTV under stock conditions. Adding, modifying, or fabricating any factory or aftermarket parts will void any warranty provided by Assault Industries® and is not recommended. Assault Industries® products could interfere with other aftermarket accessories. If user has aftermarket products on machine, contact Assault Industries® to verify that they will work together.

Although Assault Industries® has thousands of satisfied customers, user should be aware that installing lift kits, long travel, or suspension kits, tires, etc. will change the ride of machine and may increase maintenance and part wear. Operating any off-road machine while, or after, consuming alcohol and/or drugs increases risk of bodily harm or death. No warranty or representation is made as to this product's ability to protect user from severe injury or death. Assault Industries® urges operators and occupants to wear a helmet and appropriate riding gear at all times.

By purchasing and installing Assault Industries® products, user agrees that should damages occur, Assault Industries® will not be held responsible for loss of time, use, labor fees, replacement parts, or freight charges. Assault Industries®, nor any 3rd party, will not be held responsible for any direct, indirect, incidental, special, or consequential damages that result from any product purchased from Assault Industries®. The total liability of seller to user for all damages, losses, and causes of action, if any, shall not exceed the total purchase price paid for the product that gave rise to the claim.

Assault Industries® will warranty only parts provided by Assault Industries®. Any damage or problems with OEM housings, bearings, seals, or other manufacturers' products will not be covered by Assault Industries®. Assault Industries® parts and products are not warrantied if item was not installed properly, misused, or modified.

Installing, adding, modifying, or fabricating any factory or aftermarket product to your ATV/UTV may violate certain local, state, and federal laws. Be advised that laws vary depending on town, city, county, state, etc. Use of certain products on public streets, roads, or highways may be in violation law. The Buyer is solely and exclusively legally and personally responsible for any violation of the law by the installation or use of the product. You must abide by all local, state, and federal laws, including but not limited to vehicle safety, traffic laws, and ordinances. It is your responsibility to know the laws and how they apply to you.

The Buyer is responsible to fully understand the capability and limitations of his/her vehicle according to manufacturer specifications, warnings and instructions and agrees to hold Assault Industries® harmless from any damage resulting from failure to adhere to such specifications, warnings and/ or instructions. The Buyer is also responsible to obey all applicable federal, state, and local laws and ordinances when operating his/her vehicle while using this product, and the Buyer agrees to hold Assault Industries® harmless from any violation thereof.

LEAVE US FEEDBACK

Visit Assaultind.com and leave a review of your product purchase. We appreciate your opinion..... .....even if you're wrong! 😁

NEED ADDITIONAL HELP?

Check out our YouTube channel
Call us : (714) 799-6711
Monday - Friday: 8am-5pm
Email: sales@assaultind.com