REALTRUCK AMP RESEARCH Power Step

APPLICATION	LENGTH	MODEL YR	PART #
Nissan Titan / Titan XD - Crew Cab	72”	2016 - 2023	75120-01A
Nissan Titan / Titan XD - King Cab	62”	2017 - 2023	75120-01A
Nissan Titan / Titan XD - Single Cab	43”	2017 - 2023	75120-01A

INSTALLATION GUIDE

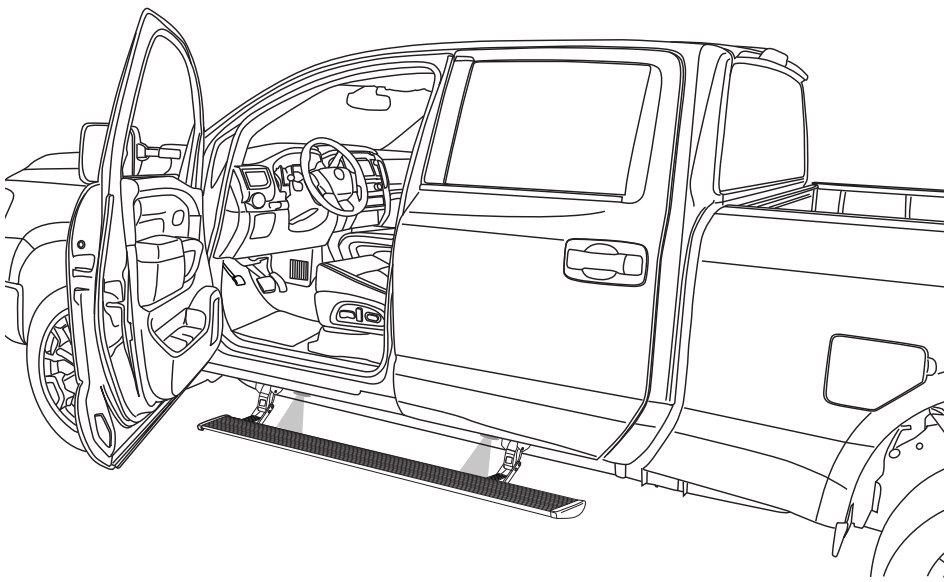

INSTALLATION TIME
3-5 Hours
Professional installation recommended

SKILL LEVEL
1 2 3 4
4= Experienced

TOOLS REQUIRED
- ❑ Safety goggles
- ❑ Measuring tape
- ❑ 17/32” Drill bits
- ❑ 10 mm socket
- ❑ 13 mm socket
- ❑ 13 mm ratchet wrench
- ❑ 9/16 Wrench
- ❑ Ratchet wrench and extension
- ❑ Wire crimpers
- ❑ Wire stripper / cutter
- ❑ 3/16” hex key wrench (allen wrench)
- ❑ Electrical tape
- ❑ Weather proof caulking (silicone sealer)
- ❑ Drill
- ❑ Heat Gun
- ❑ Torx Driver T-25

WARRANTY
5-Year Limited Warranty

REALTRUCK TECH SUPPORT 1-888-983-2204 (Press 2) Monday - Friday, 8:00 AM - 5:00 PM EST

Designed and manufactured by RealTruck AMP Research® • Made in Mexico
Patent Protected. Please see our product site for applicable patents. www.realtruck.com/b/amp-research/
© RealTruck Group, Inc., 2024 • Five-year limited warranty. • Professional installation is recommended.

INSTALLATION GUIDE
Attaching motor to Linkage assembly

The motors must be attached to the front Linkages before installation. The Drivers side motor mounts on the opposite side of the linkage as the Passenger side motor does.

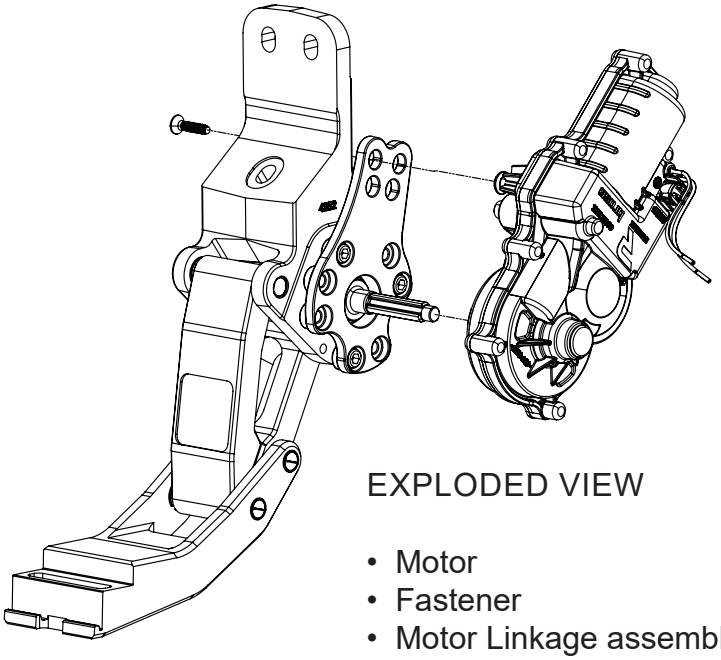

EXPLODED VIEW

- Motor
- Fastener
- Motor Linkage assembly

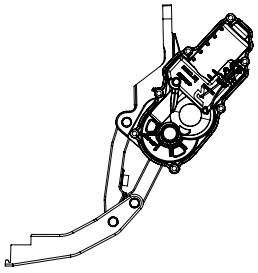

Driver's Motor Install Orientation

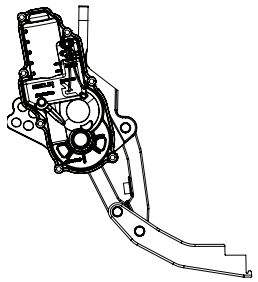

Passenger's Motor Install Orientation

CAUTION: HANDLE WITH CARE.

To ensure our customers receive all components with full integrity, we pack the motors separate from their Linkage assemblies. This requires that the installer position and fasten the motor before continuing with the install. Please follow the instructions below and handle the assembly carefully.

CAUTION: Dropping the assembly or any excessive impact MAY cause damage to the motor.

Instructions:
1. Slide motor on to drive shaft.
2. Fasten motor to the motor mounting plate using supplied PT Screw with T-25 Torx driver. Tighten screw to 60 in-lbs (6.8 N·m). **Do not over torque.**

Note:
The motor and shaft have only three possible positions. Depending on the current position of the motor, it may be necessary to power it in order to align it correctly with the linkage and shaft during assembly so that the motor can be mounted to the mounting plate.
To do this:

1. Power up the motor.
2. Open the door to allow the motor to spin and reposition.
3. Once the motor times out, remove the fuse.
4. Assemble the motor onto the shaft.
5. Fasten motor to mounting plate.

This process may need to be repeated to achieve the correct alignment.

PARTS LIST AND HARDWARE IDENTIFICATION

Note: Some Applications require modification.

Application	Cut Length
Crew Cab	72” (No Modification Required)
King Cab	62” (Trim 10”)
Single Cab	43” (Trim 29”)

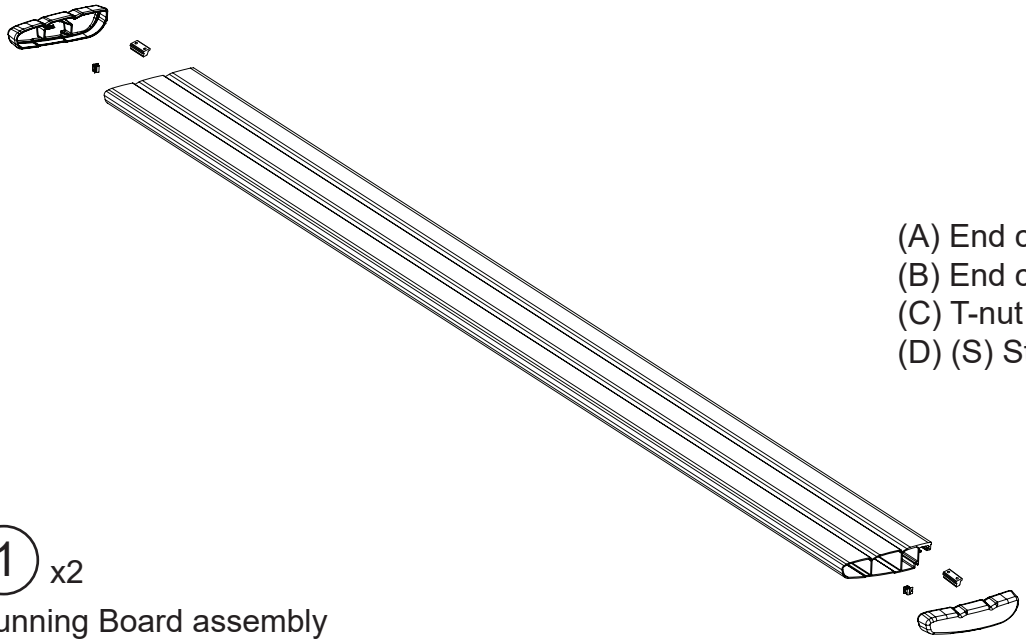

(A) End cap left (x1)
(B) End cap right (x1)
(C) T-nut insert (x2)
(D) (S) Style clips (x2)

1 x2
Running Board assembly

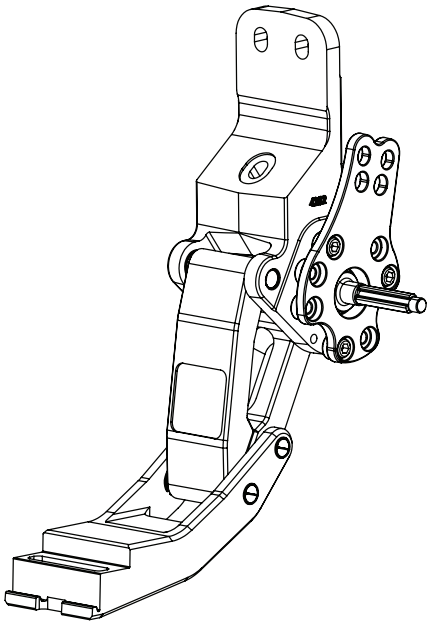

2
Driver Motor Linkage Assembly

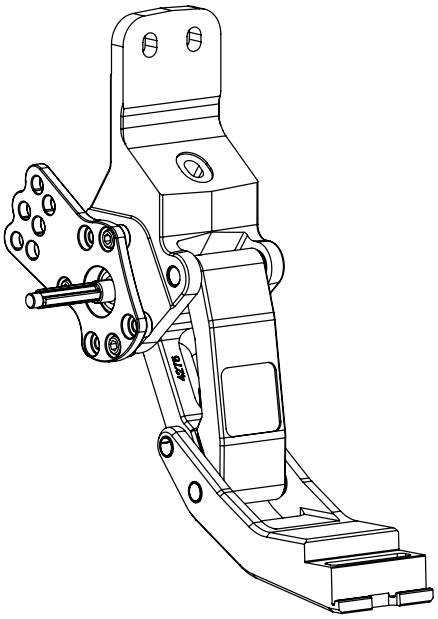

3
Passenger Motor Linkage Assembly

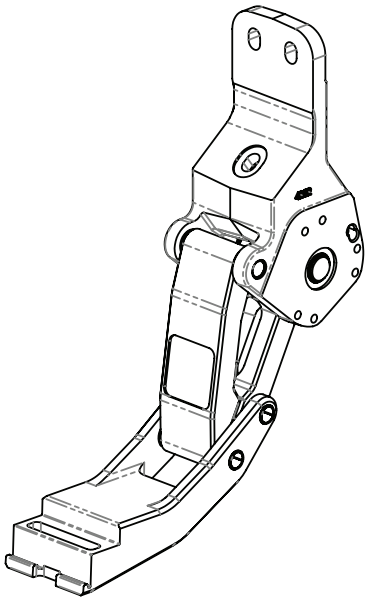

4 x2
Rear Idler Linkage Assembly

PARTS LIST AND HARDWARE IDENTIFICATION

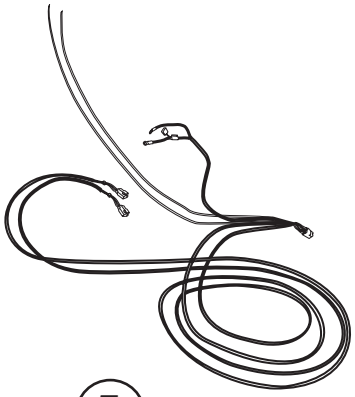

5
Wire Harness

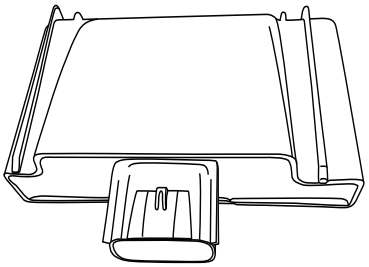

6
Controller SSA

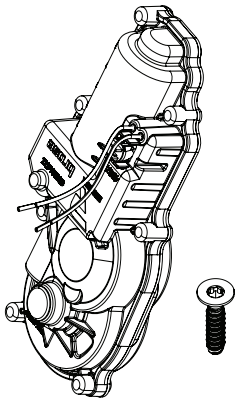

7 x2
Motor Assembly kit

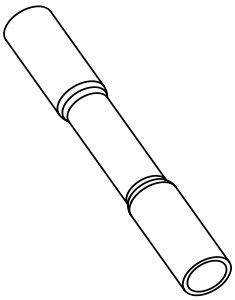

8 x8
Butt Connector

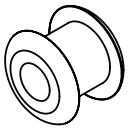

9 x4
Grommet

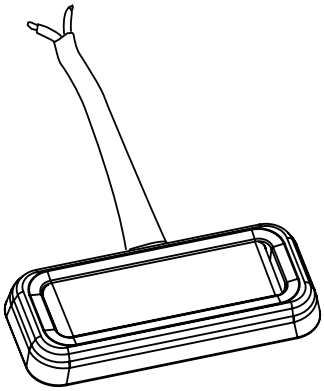

10 x4
LED Lamp

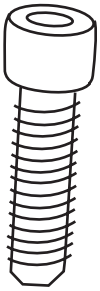

11 x8
Socket Cap Screw

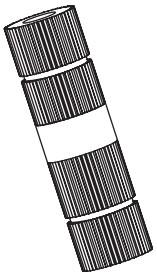

12 x4
Posi-Tap™
Pink & Gray

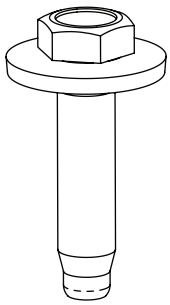

13 x8
Conical Washer Bolt

PARTS LIST AND HARDWARE IDENTIFICATION

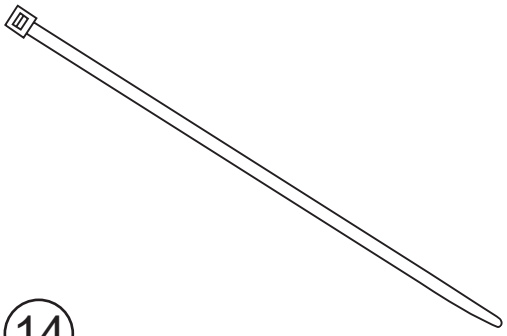

14
Cable Tie 7”

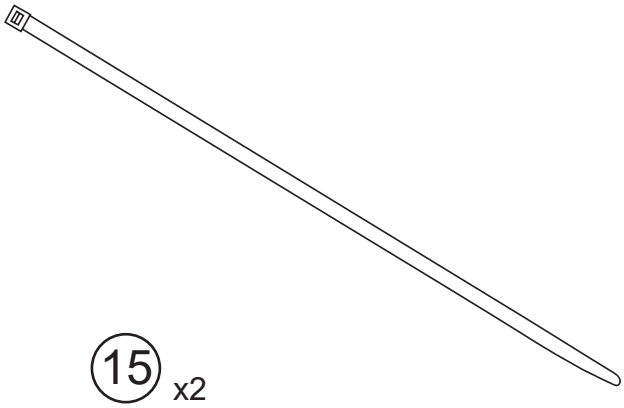

15 x2
Cable Tie 11”

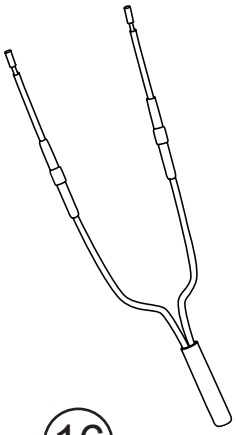

16 x2
Double-diode

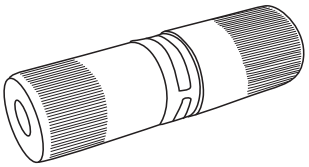

17 x4
Posi-Tite®

18 x2
(S) Style Clip (Only used when trimming board lenght)

Front Linkage (Motor Linkage)

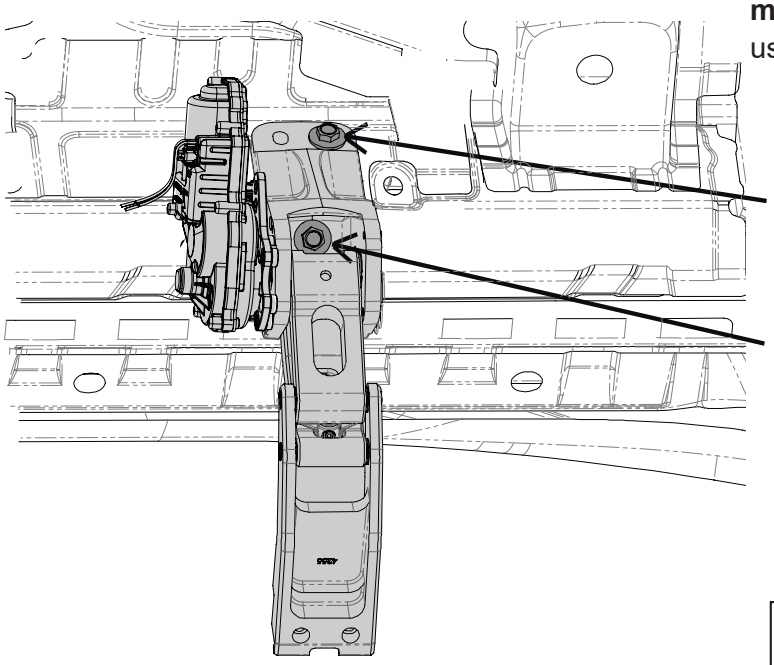

Driver Side Shown

Install the Motor linkage (driver side) in the **First mount position at the front of the truck.** using the bolts supplied (13).

Assemble the motor to the linkage like the diagram below before installation. Position the motor so the linkage is in the most extended position.

To install the lower bolt, put the bolt in a socket on an extension to guide it into position. Keep the linkage held up to the angled surface and the vertical surface. **Torque fasteners to 16 ft-lbs. (22 N m).**

Note: if motor cannot be aligned to motor mount, see note on page 2.

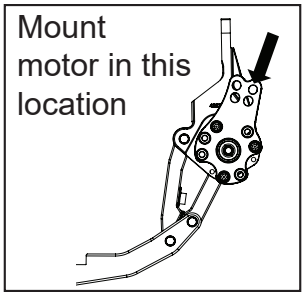

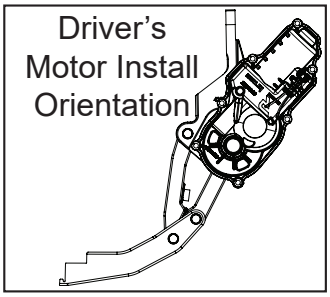

1

Front Linkage (Motor Linkage)

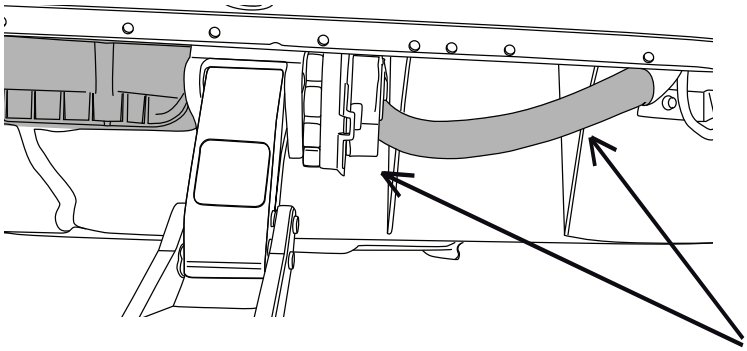

Install the Motor linkage (passenger side) in the **First mount position at the front of the truck.** using the bolts supplied (13).
Assemble the motor to the linkage for passenger side, like the diagram below before installation. Position the motor so the linkage is in the most extended position.

Note: On the Passenger side of the Titan XD, it will be helpful to remove the electrical connector cover and the bolts that hold the bracket to the frame. The connector should be left connected. On the Titan & Titan XD the two zipties that secure the harness to the body mount should be pulled from the frame as well. After the linkage is installed, reinstall the connector bracket. Use cable ties to secure the factory harness to the holes in the frame up and out of the way as shown.

Note: if motor cannot be aligned to motor mount, see note on page 2.

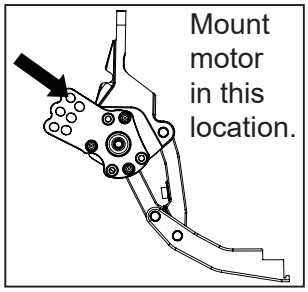

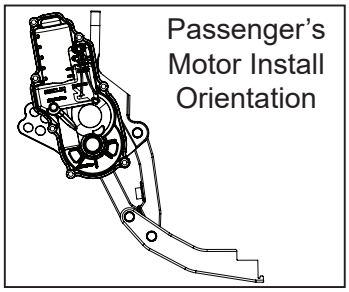

2

Rear Linkage (Idler Linkage)

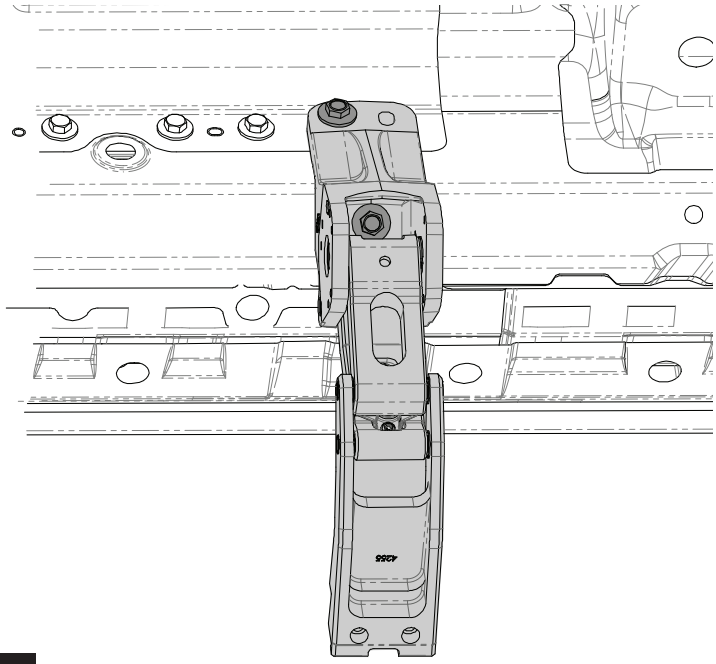

Next, install the Idler linkage in the **Third mount position from the front of the truck. Install the upper bolt in the rearward hole.** To install the lower bolt, put the bolt in a socket on an extension to guide it into position. Keep the linkage held up to the angled surface and vertical surfaces while tightening the bolts. **Torque fasteners to 16 ft-lbs. (22 N m).**

Note: Repeat on the Passenger side.

3

Slide the front mounting T-nut into position, place the board(1) about 5.5 inches from the front edge of the front door. Use fasteners (11) to attach boards, finger tighten only. Align the rear T-nut and bolt it to the rear linkage. Then tighten all 4 fasteners to 10 ft-lbs.

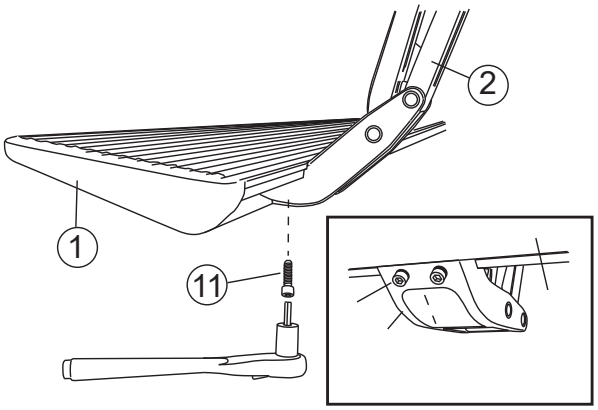

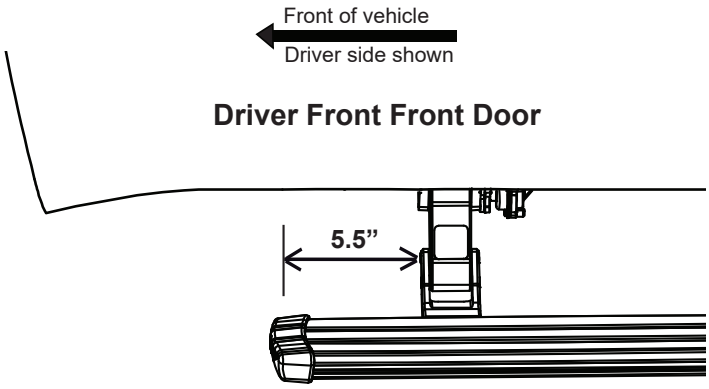

Torque to 10 ft.lbs.

4

Frist, remove the fuse from the Powerstep wire harness.

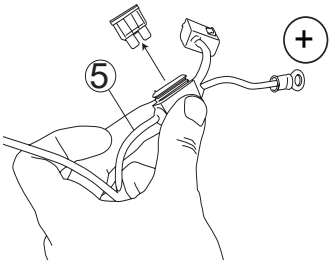

5

Gas Engine follow instructions step 6 and 7, for Diesel engine, skip to step 8.

For Gas Engine only. Plug in the main connectors (5) to the controller (6), then attach the controller to the passenger side wire harness bundle next to the fuse boxes. Secure with 11” cable ties(15). Route the long wire harness leg along the truck wire harness under the edge of the cowl and then over the AC line bracket and cable tie (14) it in place. Then pass the harness down away from the steering shaft and exhaust to the outside of the frame. The other leg shall go down immediately away from the exhaust and to the frame area. Cable tie as needed.

Gas Engine Controller Mounting

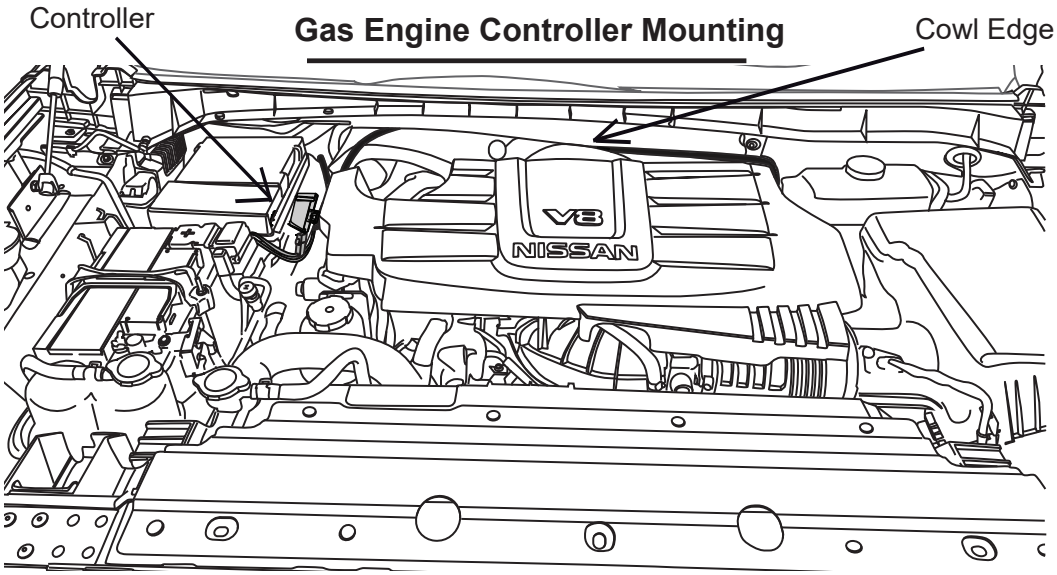

6

Gas Engine only.

Next, connect the Black wire to the chassis ground screw on the inner fender behind the battery. Connect the Red wire to the stud on the positive power battery cable-terminal.

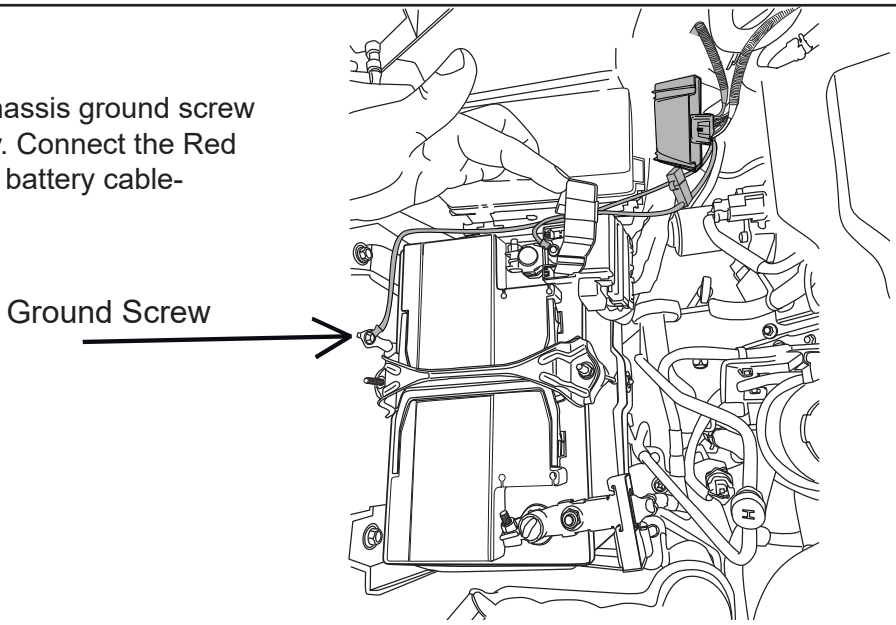

7

For Diesel Engine only. Plug in the main connectors (5) to the controller (6), then attach the controller to the passenger side wire harness bundle between the fuse boxes and overflow tank as shown below. Secure with 11” cable ties (15). Route the long wire harness leg along the truck wire harness under the edge of the cowl and then over the AC line bracket and cable-tie(14) it in place. Then pass the harness down away from the steering shaft and exhaust to the outside of the frame. The other leg shall go down immediately away from the exhaust and to the frame area. Cable tie as needed.

Diesel Engine Controller Mounting

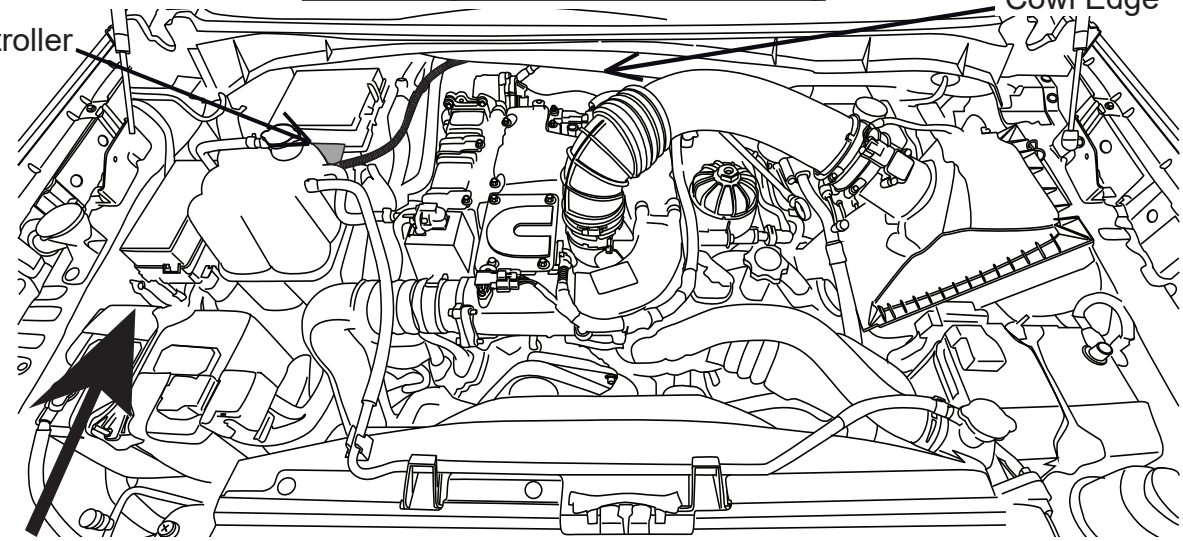

8

For Diesel Engine only.

Next, connect the Black wire to the ground screw on the inner fender in diagram at top of page. Connect the Red wire to the stud on the positive power battery cable terminal.

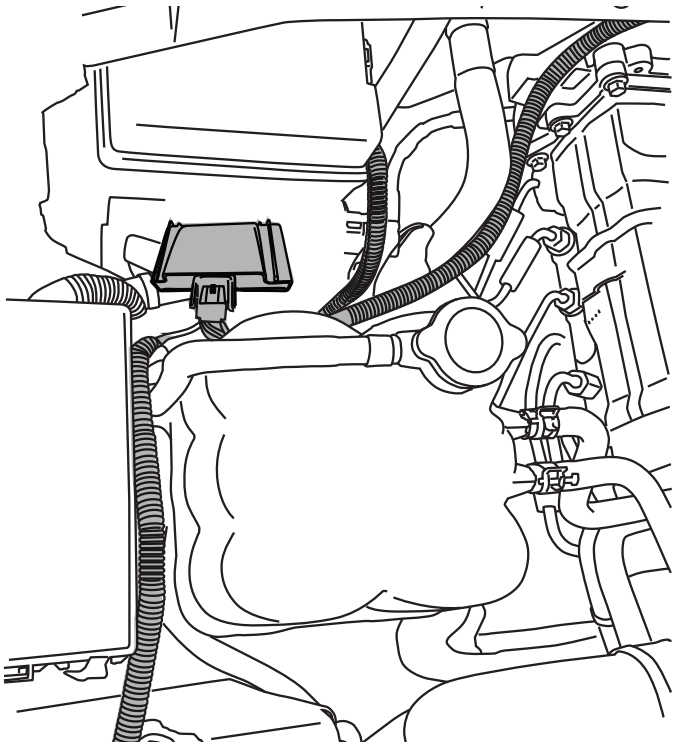

9

Route the two wire harness legs down to the top of the frame rails on each side and keep clear of hot and moving parts. Secure harness behind wheel liners, secure with supplied cable ties.

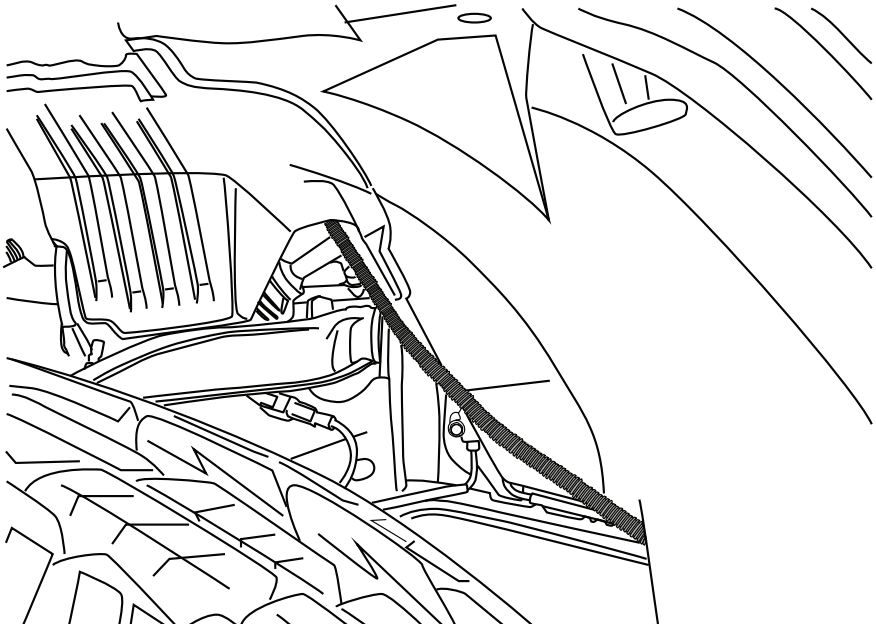

10

Route the two wire harness legs towards the rear of the vehicle above the body mounts, to the motor and the light locations. The shorter leg will run to the passenger side of vehicle. Secure harness with supplied tie wraps.

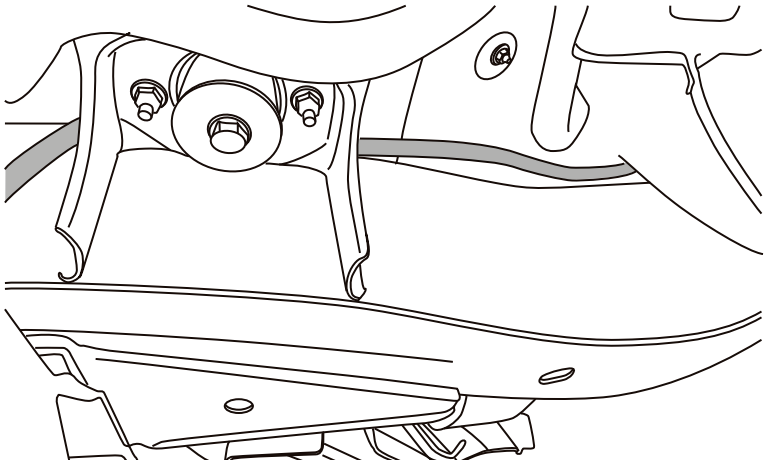

On the Driver side, Do Not Ziptire the Wire Harness to the Brake Lines.

Route the Driver side wire harness leg towards the rear of the vehicle above the body mount and to the large holes on the side of the frame. Secure with supplied tie wraps. Then wire the motor to the harness using instructions in step 12. Use method A for driver side; method B for passenger side.

Note: If motors are moving in opposite direction after wiring; switch wiring configuration on either passenger or driver side to correct this issue.

11

Before proceeding, see spin direction of the each motor than proceed with step A or B below.

A. Motor spinning the shaft clockwise direction:

1) First, install one Posi-Tite® onto white wire from the motor. See image on right.

2) Install second Posi-Tite® onto orange wire from motor. See image on right.

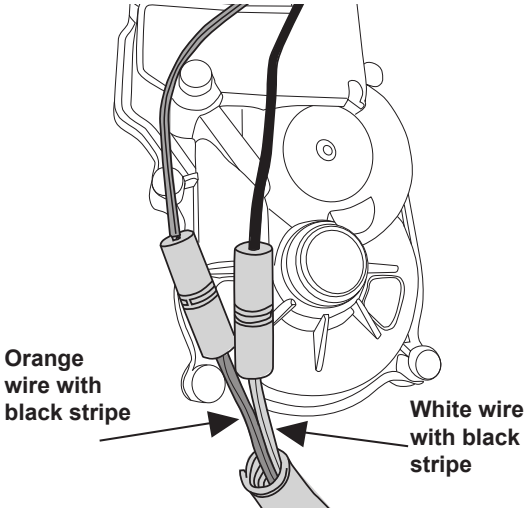

3) Next, connect the white wire with black stripe from the wire harness to the other end of the Posi-Tite® that is connected to the all white wire from first step above.

4) Connect the Posi-Tite® the orange wire from the motor with the orange with black stripe wire from the harness.

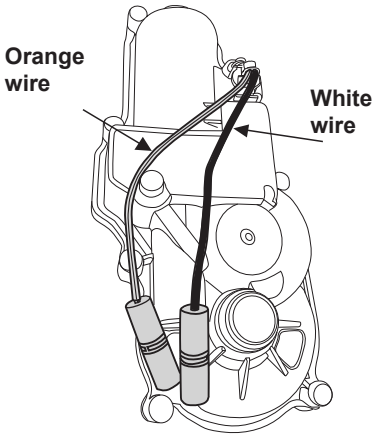

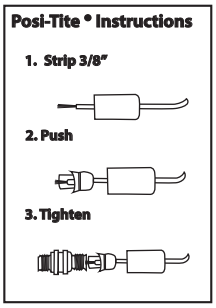

B. Motor spinning the shaft counter clockwise direction:

1) First, install one Posi-Tite® onto white wire from the motor. See image on right.

2) Install second Posi-Tite® onto orange wire from motor. See image on right.

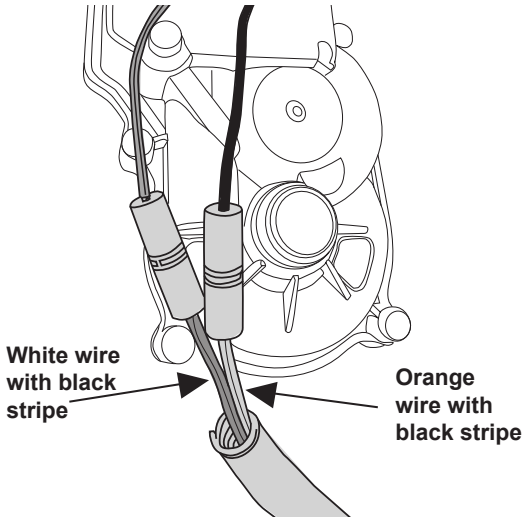

3) Next, connect the orange wire with black stripe from the wire harness to the other end of the Posi-Tite® that is connected to the all white wire from first step above.

4) Connect the Posi-Tite® the orange wire from the motor with the white with black stripe wire from the harness.

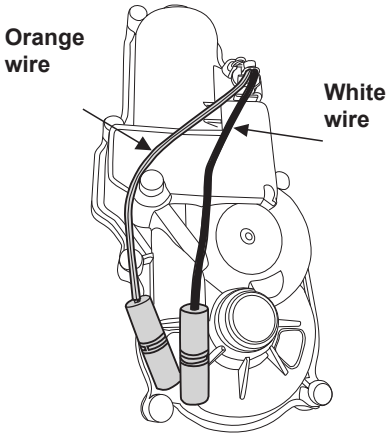

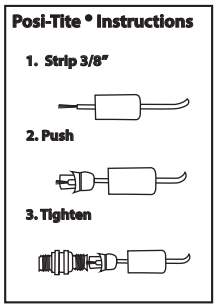

Remove the driver side door sill trim and and kick panel carefully. Pull up the carpet, and poke a hole through the rubber insulation material. Run the trigger wires through and over to the door sill, as shown in dashed lines.

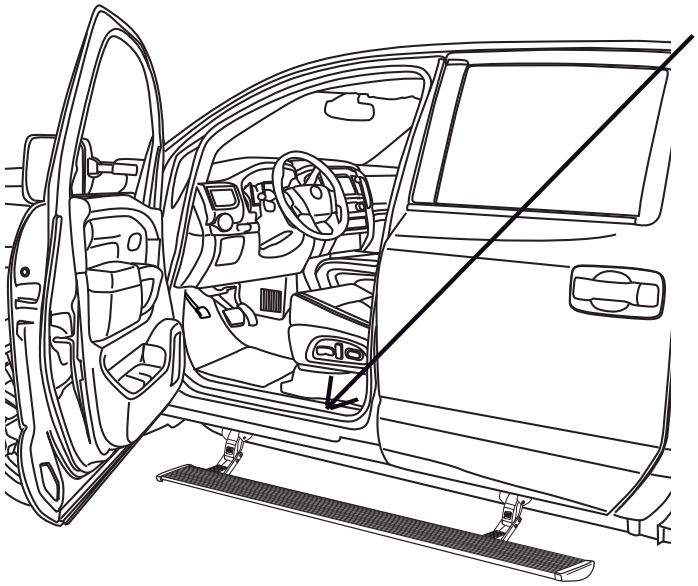

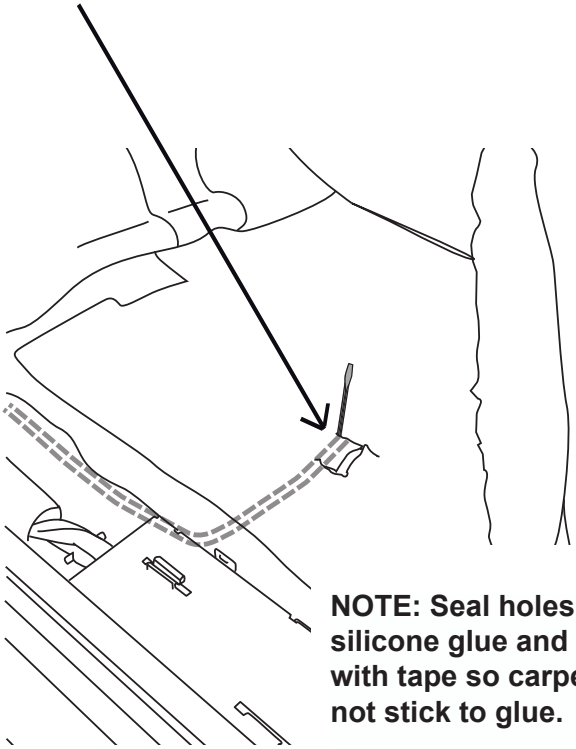

NOTE: Seal holes with silicone glue and cover with tape so carpet does not stick to glue.

13

Route the two trigger wires towards the rear of the vehicle above the body mounts and up to the first access hole in the floor on the driver side. Secure harness with supplied cable ties.

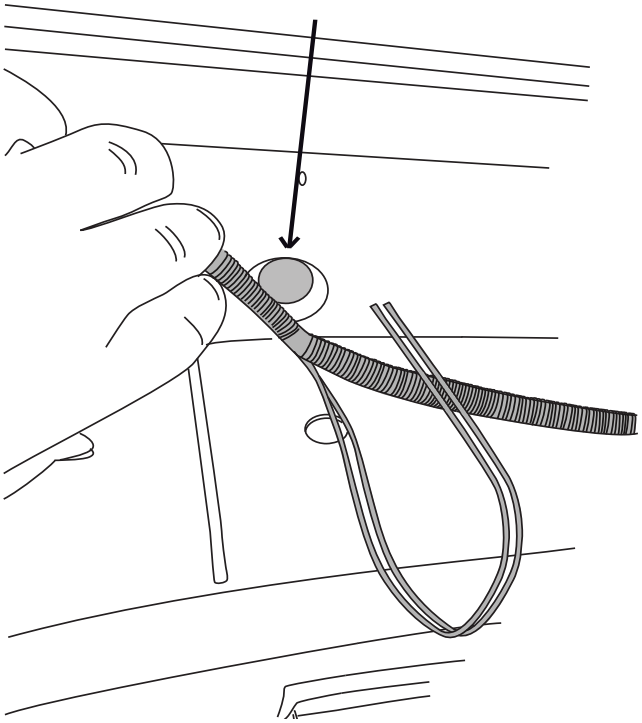

14

Posi-taps instructions below, to be used in next step.

Posi-Tap™ instructions

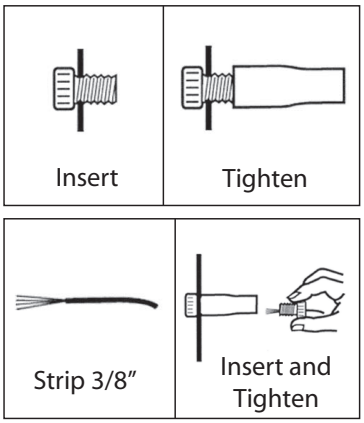

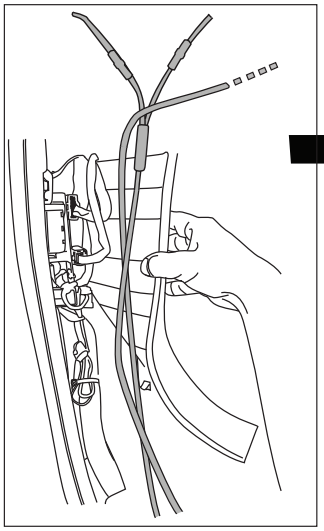

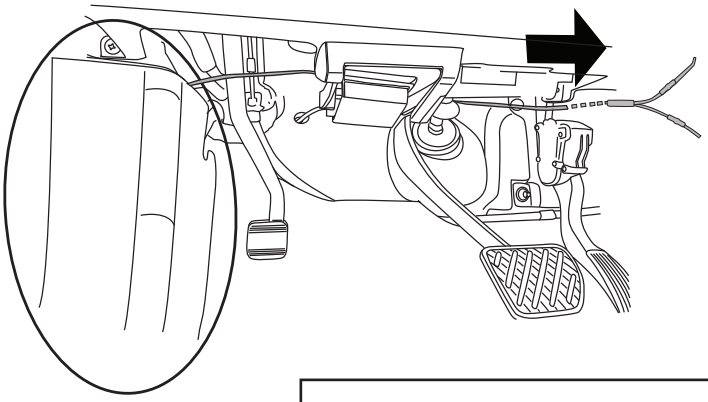

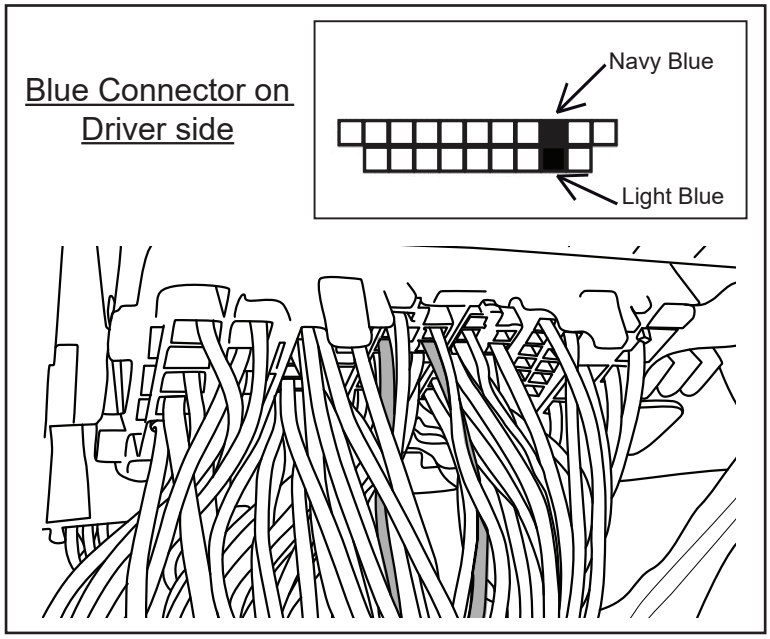

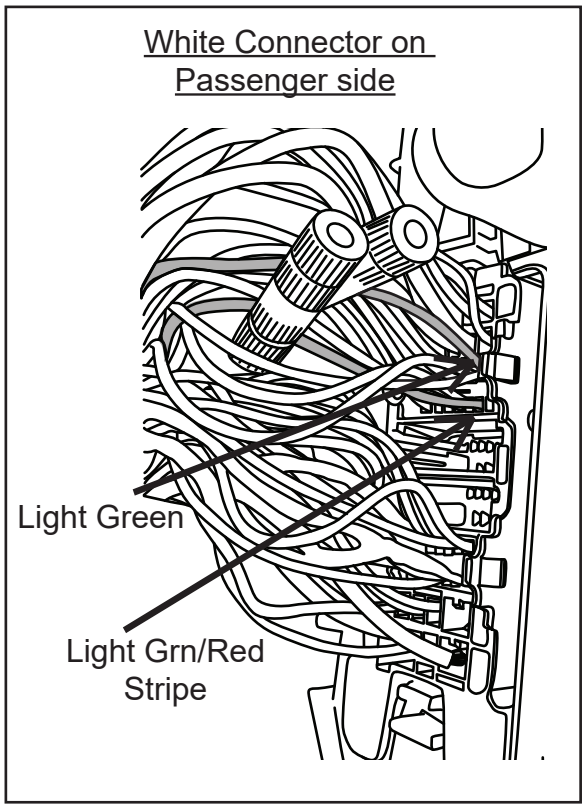

Driver Side:

Crimp supplied Double Diode (Item 16) to Purple with Black Stripe wire. Locate connector block on kickpanel. Remove with a 10mm socket or wrench to allow easy access to back side of connectors. Locate Blue bank of wires. Connect one end of the Double Diode to the Navy Blue Wire and the other end of the diode to the Light blue Wire, use Posi-tap (12). Reinstall connector block.

Passenger Side:

Remove passenger side kick panel and panels on each side of the center console. Route solid Purple trigger wire accross to passenger side. Run the wire behind brake and gas pedal and thru center console area and over to kick panel. Locate connector block and remove two 10mm screws. Locate grey bank of wires. Crimp Double Diode (Item16) to purple wire. Connect one end of Double Diode to Light Green with Red Stripe wire and the other end of the Diode to the Light Green wire, use Posi-tap (12). Reinstall connector block.

Reinstall kick panels and center console panels.

On each side of the vehicle measure from the rear edge of the front linkage on the pinch weld 7.5” back and mark. Measure 1.25” from the front edge of the rear linkage and mark. **Note: for King Cab, mount the rear light 8” in front of the rear linkage. For the single cab one light mounted in the center of the door is sufficent.**

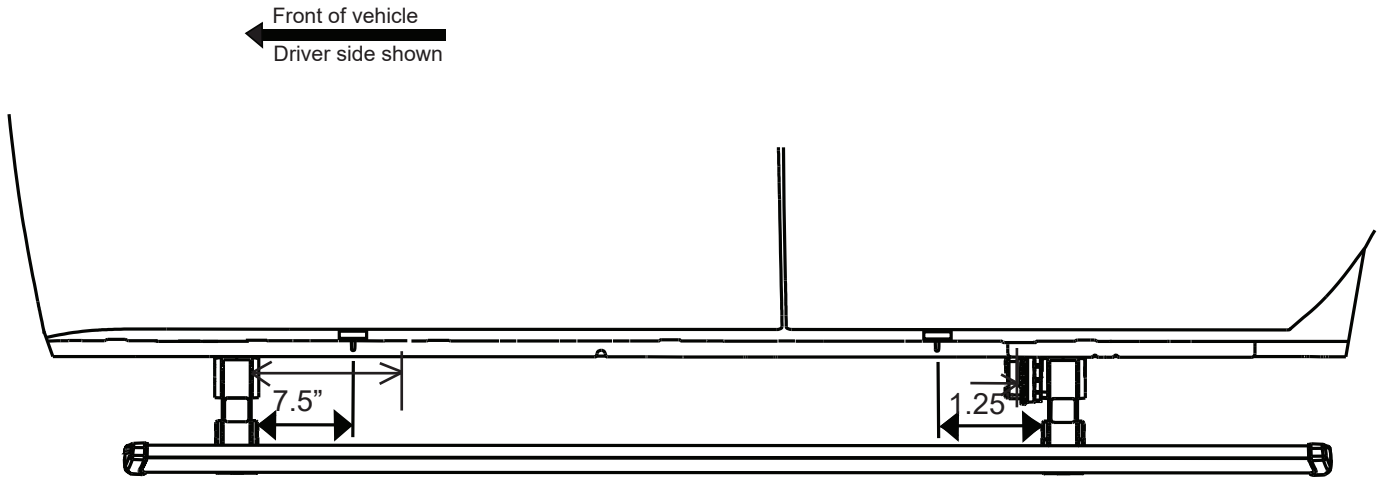

16

Center punch and drill a 1/8” pilot hole then drill a 19/64” hole through the pinch weld at marked locations. Deburr all holes. After drilling apply paint to holes to prevent rusting.

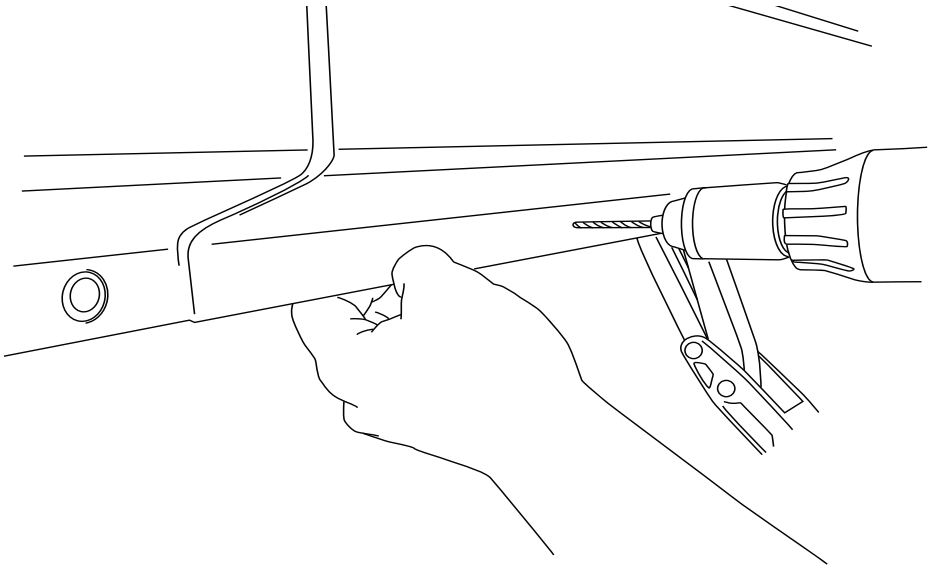

17

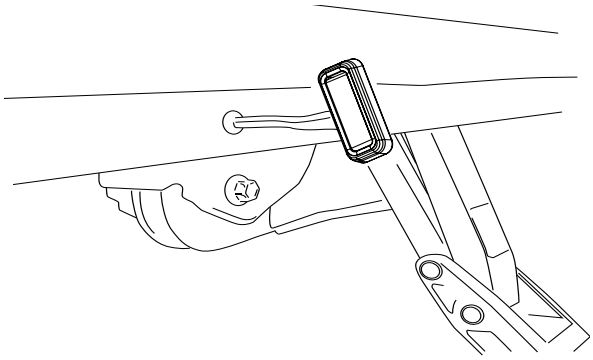

Insert grommet(9) into drilled holes. Insert lamp(10) wires through the grommets. (Silicone lube will help wires slip through

18

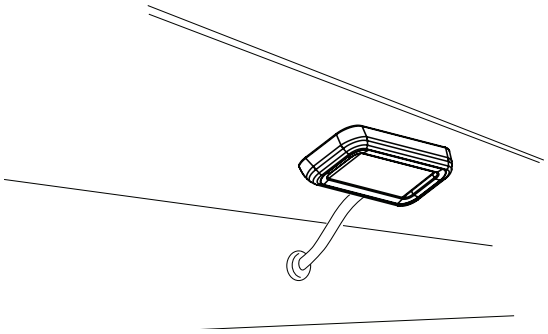

Affix lamp to rocker panel surface. Make sure lamp is affixed to a flat, clean surface.

19

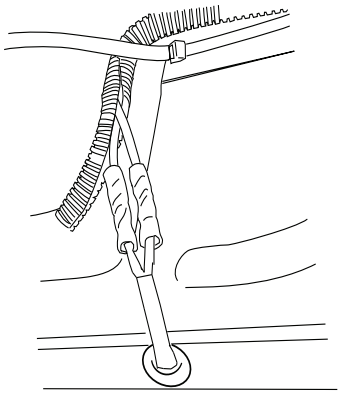

Using supplied butt connectors (8), connect the lamp wires. Red to Red, Black to Black. Once crimped use heat gun to shrink tube.

20

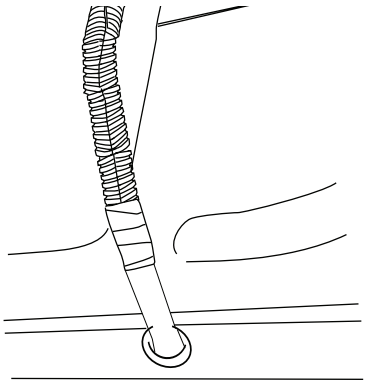

Close and wrap with conduit and electrical tape. Secure all loose wires with cable ties, with lamp wires pulled upward to avoid any wire snagging.

21

Reinstall fuse. Check that all doors activate the Power Step and the LED Lights work when doors open and close. Reinstall any remaining trim panels.

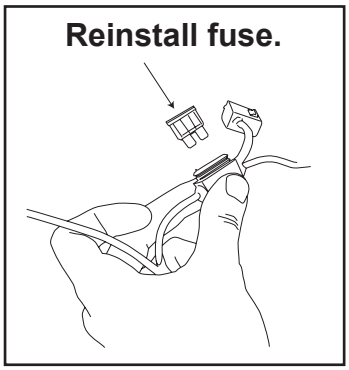

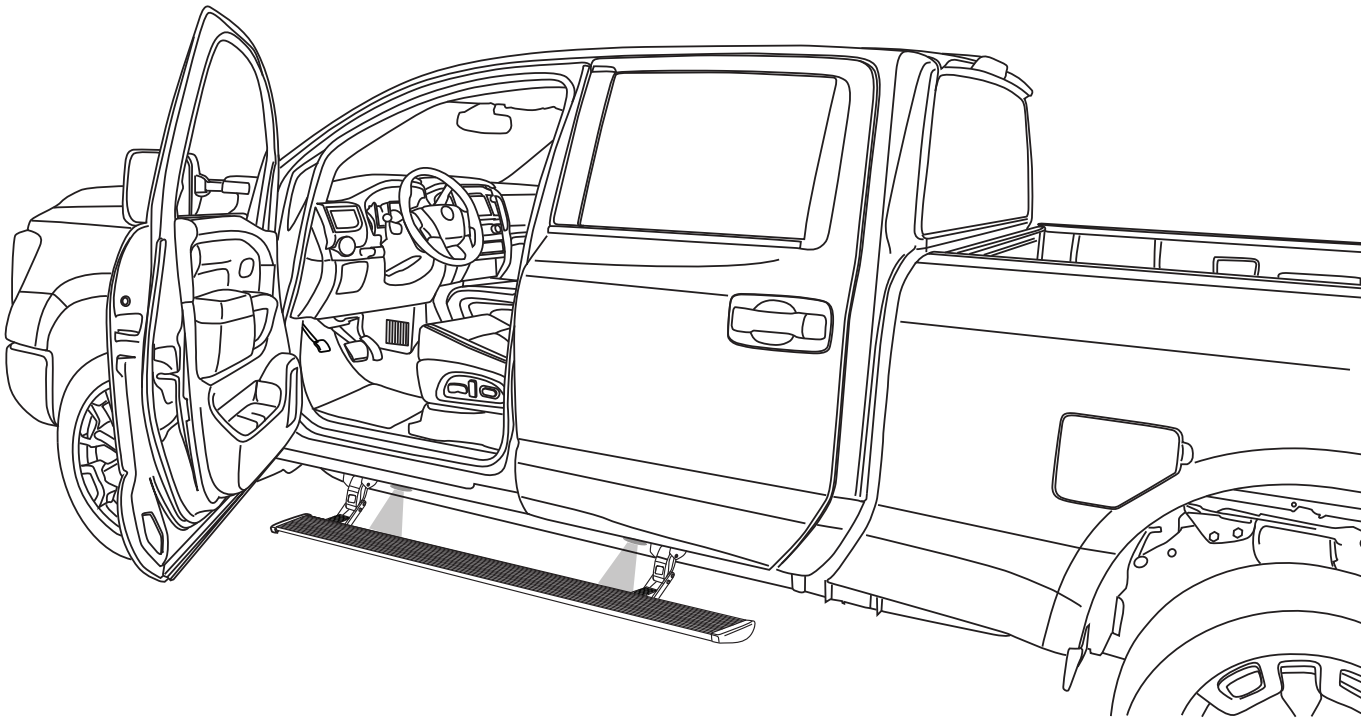

FINAL SYSTEM CHECK
Check that all doors activate the PowerStep and the LED lights work when doors open and close.
NORMAL OPERATION: When the doors open, PowerStep automatically deploys from under the vehicle. When the doors are closed, PowerStep will automatically return to the stowed/retracted position. ***Note that there is a 2-second delay before the PowerStep returns to the stowed/retracted position.***

CORRECT OPERATION OF LIGHTS: All four lamps will illuminate upon opening any door of vehicle. Lamps will stay on until restowing of both Power Steps or until 5 minutes has expired with the doors open. When the lights timeout after 5 minutes, they can be reillumintated by closing and opening any door of vehicle.

AMERICAN DESIGNED & ENGINEERED

Thank you for your recent RealTruck purchase.

REGISTER YOUR PRODUCT TODAY FOR FASTER SERVICE & PRODUCT UPDATES

Please visit:
https://realtruck.com/warranty-registration/
or scan the QR Code

SCAN ME

Product Registration Benefits:

• Ensure we have your purchase receipt and product info in our system which is required for warranty.

• Faster and easier access to customer service and tech support in the unlikely event you need warranty or product support.

• Registration helps us keep you up to date on product information and offers.

To view other RealTruck products that may be offered for your vehicle.

Please visit: www.realtruck.com

REALTRUCK AMP RESEARCH Power Step

Congratulations on your purchase of the genuine RealTruck / AMP Research PowerStep! Here's what you should know...

POWER-DEPLOYABLE RUNNING BOARDS OPERATION: RealTruck / AMP Research PowerStep running boards automatically move when the doors are opened to assist entering and exiting the vehicle.

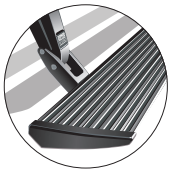

Automatic power deploy:
The running boards will extend down and out when the doors are opened.

Automatic power stow:
The running boards will return to the stowed position when the doors are closed. There will be a 2-second delay before the running boards move to the stowed position.

Automatic stop:
If an object is in the way of the moving running board, the running board will automatically stop. To reset, clear any obstruction, then simply open and close the door to resume normal operation.

Manually set in the deployed (OUT) position for access to the roof:
The running boards can be manually set in the deployed position by firmly holding the step down with your foot while at the same time closing the door. To resume normal operation, open and close the door.

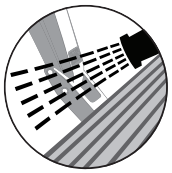

Maintenance: In adverse conditions, debris such as mud, dirt, and salt may become trapped in the running board mechanism, possibly leading to unwanted noise. If this occurs, manually set the running boards to the deployed position and flush the front and rear hinge arms with a high-pressure car wash wand. Avoid spraying the motors directly. After washing, apply silicone spray lubricant to the hinge pivot pins. Do not apply silicone, wax or protectants like Armor All® to the running board stepping surface.

Caution! Keep hands away when the running board is in motion.

5-YEAR LIMITED WARRANTY

RealTruck / AMP RESEARCH warrants this product to be free from defects in material and workmanship for FIVE (5) YEARS FROM DATE OF PURCHASE, provided there has been normal use and proper maintenance. This warranty applies to the original purchaser only. All remedies under this warranty are limited to the repair replacement of the product itself, or the repair or replacement of any component part thereof, found by the factory to be defective within the time period specified. The decision to repair or replace is wholly within the discretion of the manufacturer.

This warranty specifically excludes labor. If you have a warranty claim, first you must call our factory at the number below for instructions. You must retain proof of purchase and submit a copy with any items returned for warranty work. Upon completion of warranty work, if any, we will return the repaired or replaced item or items to you freight prepaid. Damage to our products caused by accidents, fire, vandalism, negligence, misinstallation, misuse, acts by nature or by defective parts not manufactured by us, is not covered under this warranty.

ANY IMPLIED WARRANTIES OF MERCHANTABILITY AND/OR FITNESS FOR A PARTICULAR PURPOSE CREATED HEREBY ARE LIMITED IN DURATION TO THE SAME DURATION AND SCOPE AS THE EXPRESS WRITTEN WARRANTY. OUR COMPANY SHALL NOT BE LIABLE FOR ANY INCIDENTAL OR CONSEQUENTIAL DAMAGE.

Some states do not allow limitations on how long an implied warranty lasts, or the exclusion or limitation of incidental or consequential damages, so the above limitations or exclusions may not apply to you. This warranty gives you specific legal rights, and you may also have other rights that vary from state to state.

FOR WARRANTY ISSUES WITH THIS PRODUCT PLEASE CALL REALTRUCK TECH SUPPORT 1-888-983-2204

WARNING

Be sure to read and precisely follow the provided instructions when installing this product. Failure to do so could place the vehicle occupants in a potentially dangerous situation. After installing or reinstalling, re-check to insure that the product is properly installed.