INSTALLATION GUIDE

APPLICATION		MODEL YR	PART #
Dodge Ram Regular Cab *	2500/3500	2025-2026 (Gas & Diesel)	76365-01A
Dodge Ram Crew Cab	2500/3500	2025-2026 (Gas & Diesel)	76365-01A
Dodge Ram Mega Cab	2500/3500	2025-2026 (Gas & Diesel)	76365-01A

***Modification required to running board assembly. See Item 1 on page 3.**

NOTE: EXCLUDES CHASSIS CAB MODELS WITH DIESEL ENGINES.

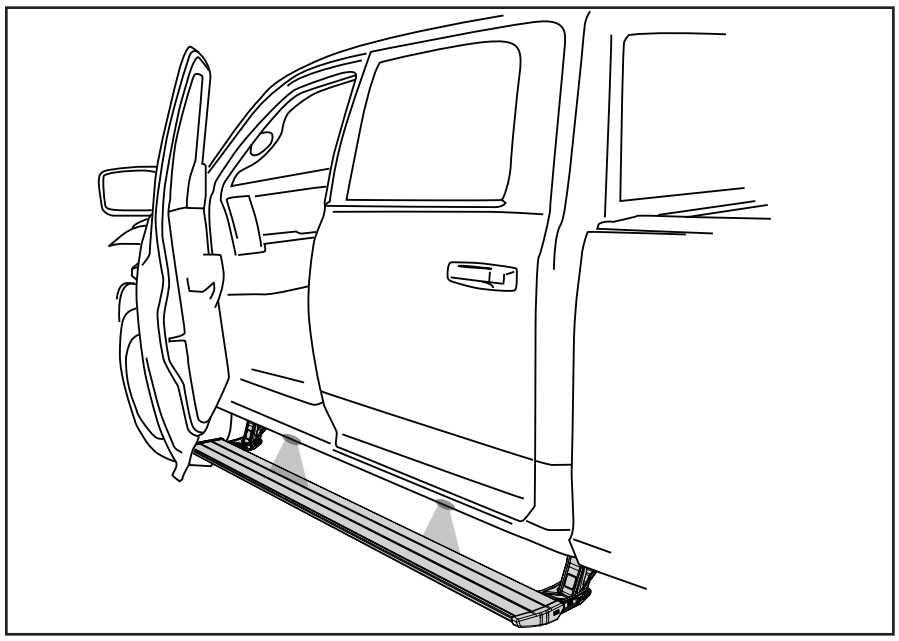

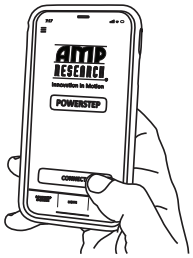

SMART SERIES APP: Download App to your phone and unlock the latest features including override, light controls, and diagnostics.

SCAN ME

INSTALLATION TIME

3-5 Hours

Professional installation recommended

SKILL LEVEL

1 2 3 4

4= Experienced

TOOLS REQUIRED

- ❑ Safety goggles
- ❑ Measuring tape
- ❑ 13mm wrench
- ❑ 9/16 wrench
- ❑ 13mm socket
- ❑ 10mm socket
- ❑ Ratchet wrench and extension
- ❑ Wire stripper / cutter
- ❑ 3/16” hex key (allen wrench)
- ❑ 4mm hex key (allen wrench)
- ❑ Rivet Tool
- ❑ 1/8”, 9/32” and 3/16” Drill Bit
- ❑ T27 torx Bit
- ❑ Center Punch
- ❑ Anti Corrosion Paint
- ❑ Electrical tape

WARRANTY

5-Year Limited Warranty

REALTRUCK TECH SUPPORT 1-888-983-2204 (Press 2) Monday - Friday, 8:00 AM - 5:00 PM EST

Designed and manufactured by RealTruck AMP Research® • Made in Mexico
Patent Protected. Please see our product site for applicable patents. www.realtruck.com/b/amp-research/
© RealTruck Group, Inc., 2025 • Five-year limited warranty. • Professional installation is recommended.

INSTALLATION GUIDE
Motor to linkage assembly

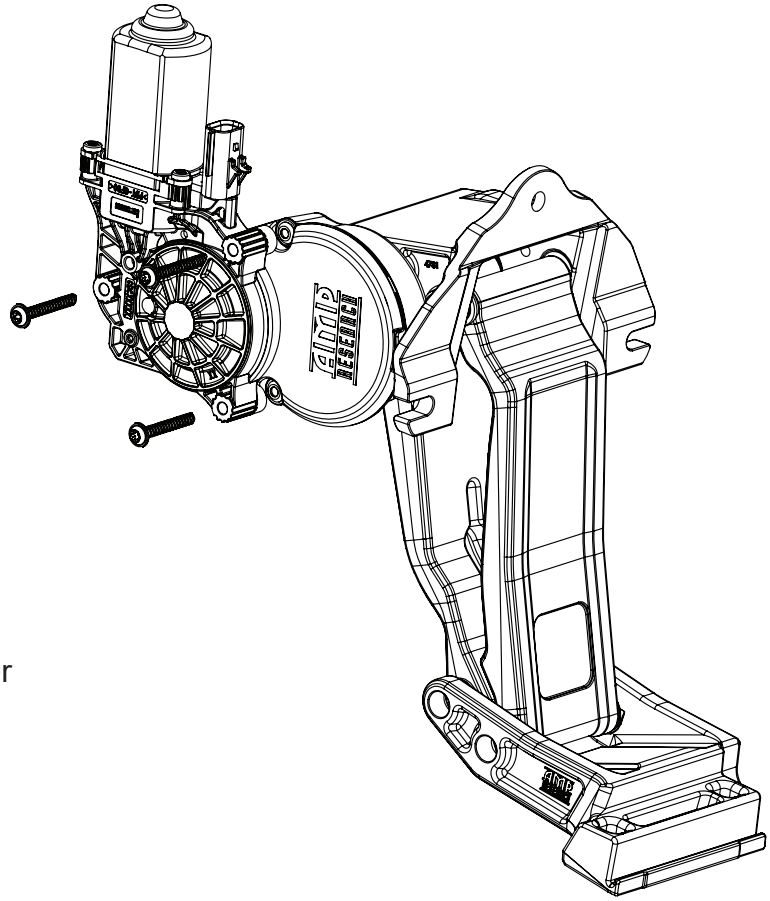

EXPLODED VIEW

- Motor
- Socket cap screw
- Washer
- Drive Gear Housing Cover

CAUTION: HANDLE WITH CARE.

To ensure our customers receive all components with full integrity, we pack the motors separate from their linkage assemblies. This requires that the installer position and fasten the motor before continuing with the install. Please follow the instructions below and handle the assembly carefully.

CAUTION: Dropping the assembly or any excessive impact MAY cause damage to the motor.

Instructions:

1. Position the gear cover in place as shown if not already in place.

2. Seat motor into position on the three mounting bosses. This may require an adjustment of the gear by moving the swing arms.

3. After seating into place, fasten the motor with the three motor mount screws with 4mm Hex Head. Tighten screws to 36 in-lbs (4N-m). **Do not over torque.**

PARTS LIST AND HARDWARE IDENTIFICATION

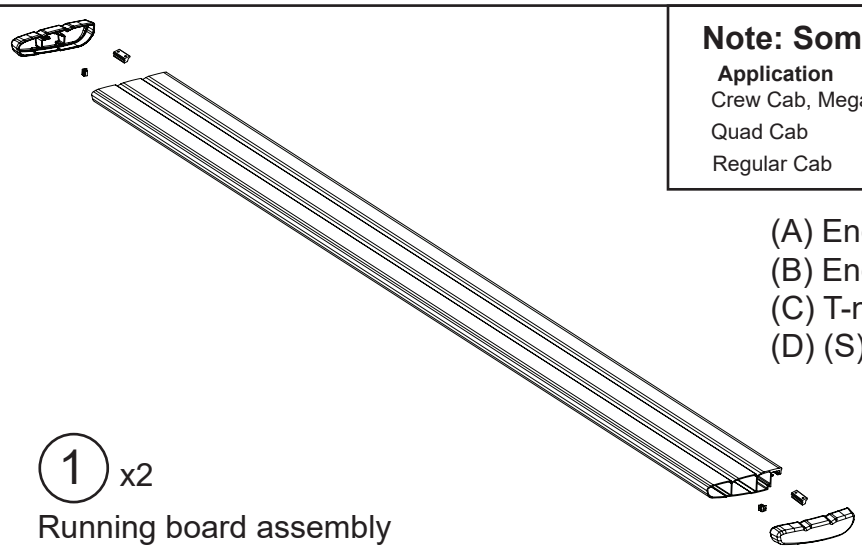

Note: Some Applications require modification

Application	Cut Length
Crew Cab, Mega Cab	79” (No Modification Required)
Quad Cab	72” (Trim 7”)
Regular Cab	50” (Trim 29”)

(A) End cap left (x1)
(B) End cap right (x1)
(C) T-nut insert (x2)
(D) (S) Style clips (x2)

1 x2
Running board assembly

Driver Side Linkages

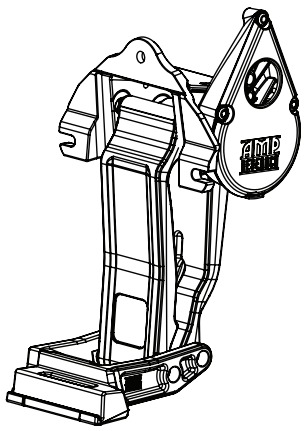

2a
Motor Linkage Assembly - Driver Side

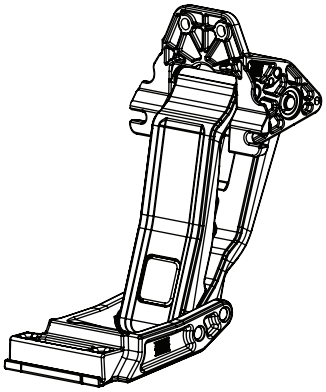

3a
Idler Linkage Assembly - Driver Side

Passenger Side Linkages

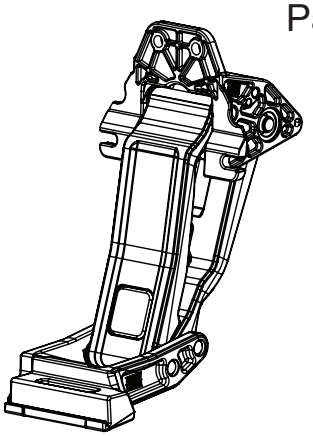

3b
Idler Linkage Assembly - Passenger Side

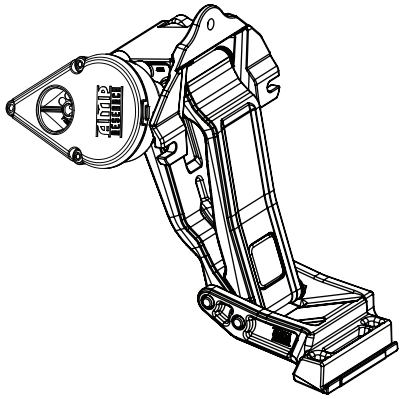

2b
Motor Linkage Assembly - Passenger Side

PARTS LIST AND HARDWARE IDENTIFICATION

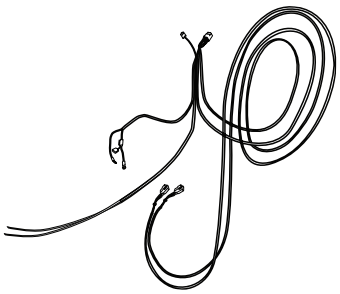

4 Wire Harness

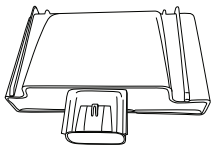

5 SSA Controller

6 x8 Rivet Nut

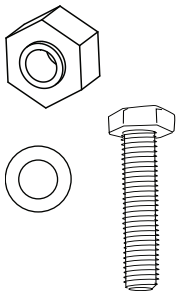

7 Rivet Nut Tool

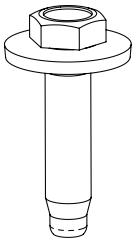

8 x20 Conicle Washer Bolt

9 x8 Blind Rivet

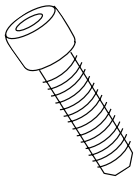

10 x8 Socket Cap Screw

11 x20 Cable Tie (7”)

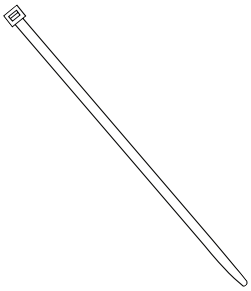

12 x2 Cable Tie (11”)

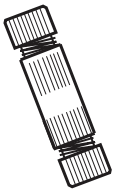

13 Posi-Lock™ Connector

14 x8 Button Head Torx Screw

15 x8 Washer

16 x4 Grommet

PARTS LIST AND HARDWARE IDENTIFICATION

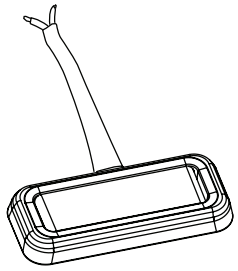

17 x4
LED Lamp

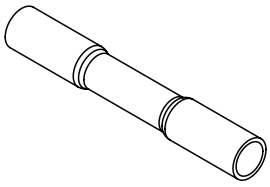

18 x8
Butt Connector

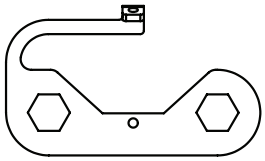

19 x4
Reinforcement Bracket

20 x4
Blind Rivet

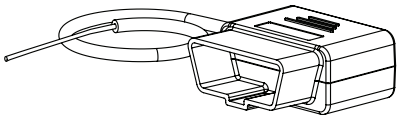

21
OBD II Plug
(Smart Series)

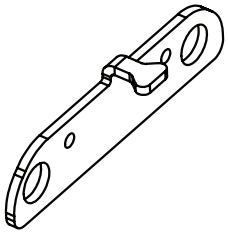

22 x2
Spacer (front drive linkage)

23 x2
(S) Style Clip (Only used when trimming board lenght)

24 x2
Posi-Tap™ Connector

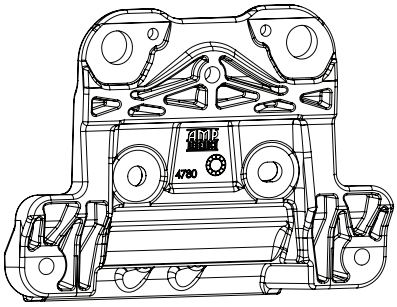

25 x2
Front Body Mount

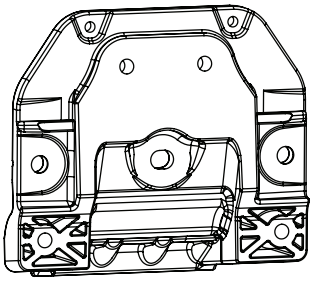

26 x2
Rear Body Mount

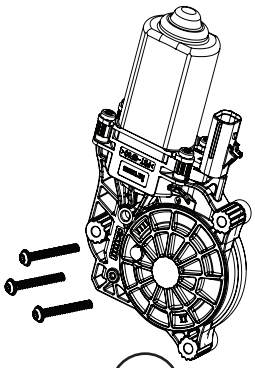

27 x2
Motor kit

HARDWARE MOUNTING OVERVIEW (passenger side shown)

Locate forward most and rearward most mounting provisions on inner sill of truck. Remove tape from sill drain hole at both mounting points.

Note: Some vehicles may have Front welded fasteners installed already. Backing plates and rivet nuts are not needed on these locations. Factory Rivet nuts will need to be removed to install backing plates

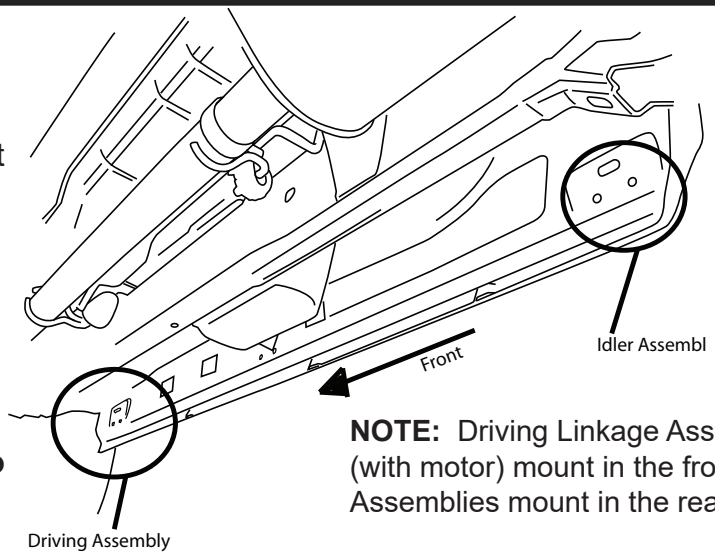

NOTE: Driving Linkage Assemblies (with motor) mount in the front; Idler Assemblies mount in the rear.

1

Set Reinforcement Plate (19) in place and locate with rivet nuts. Drill hole using an 1/8” drill bit. After drilling apply paint to prevent rusting.

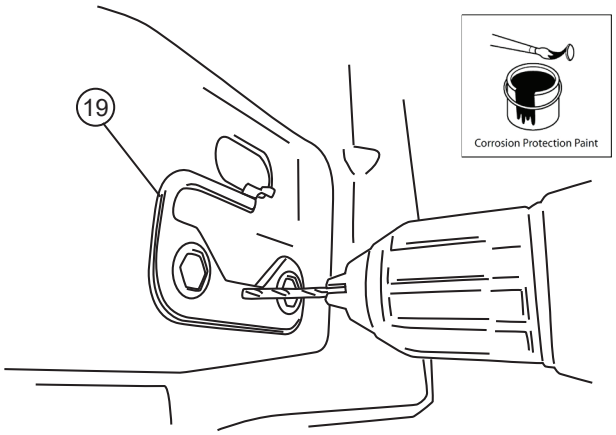

2

Once hole is drilled insert a piece of string or wire through hole in Reinforcement Plate. Set plate into position.

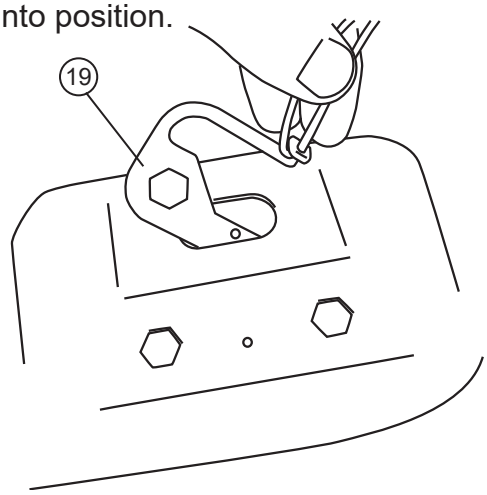

3

Set rivet nuts into place for alignment. Insert pop rivet through hole in plate and secure in place. Once pop rivet is installed remove string or wire from Reinforcement Plate. **NOTE: Verify plate is pulled flush to the body before securing pop rivet.**

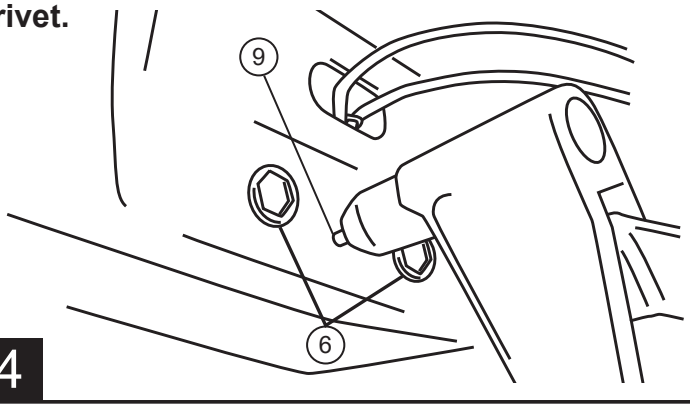

4

Assemble Rivet Nut Tool (Hex Bolt (lubricated with soapy water), Washer, Rivet Tool) (7), and Rivet Nut (6) together as shown and place into hex cutouts in sill. An extra Hex Bolt and M8 Washer is supplied to install rivet nuts.

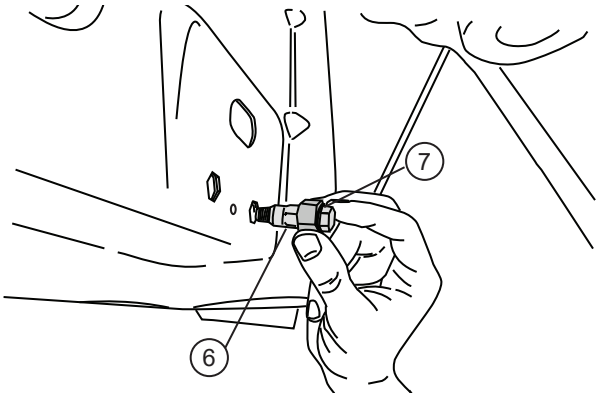

5

With Rivet Nut Tool held in place with 9/16mm wrench, tighten Hex Bolt until Rivet Nut deforms and secures itself to the sheet metal (110 in-Lbs. or 4 turns). Remove Hex Bolt and Rivet Nut Tool. Repeat for each of the four mentioned mounting locations.

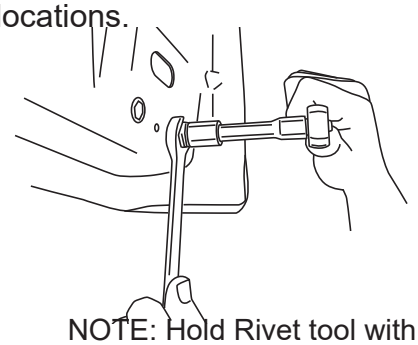

WARNING: Rivet Nuts not properly collapsed will not hold securely to sheet metal.

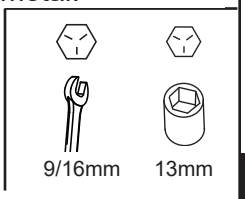

NOTE: Hold Rivet tool with wrench while loosening bolt.

6

Once rivet nuts are in place use a screwdriver to push back tab in hole to avoid interference with linkage mount.

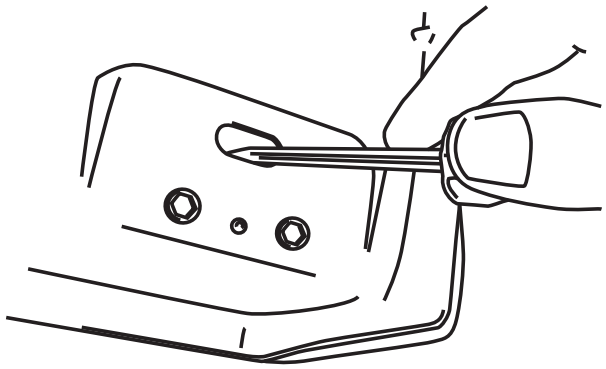

7

Rear Linkage Install: Set rear body mount plate (26) to body.

Note: Center and rear hole will be used. Driver side shown. Use supplied Conical washer bolts (8) to attach as shown, At the pinch weld Use a T27 Torx driver and torque bolts to 6ft-lbs.
Next torque bolts to 16 ft-lbs.

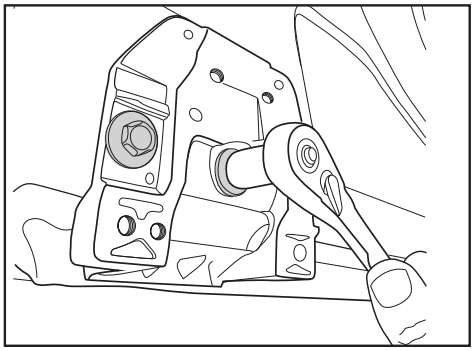

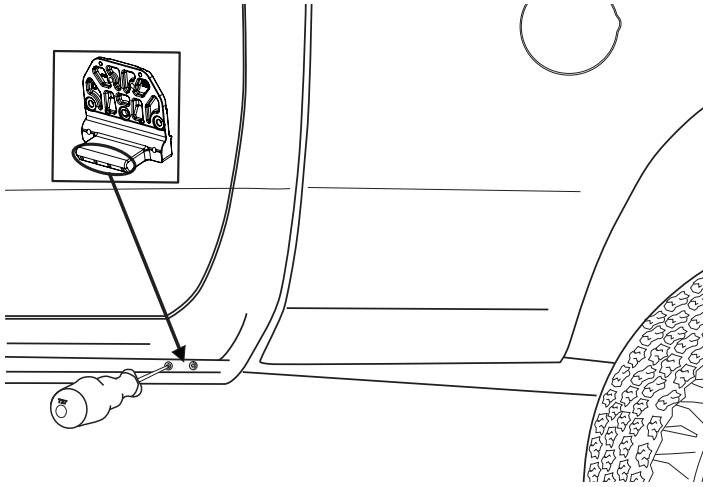

8

Rear Idler linkage: Set linkage into position. Use supplied conical washer bolts to attach linkage to body mount plate. Use rear most bolt as shown on driver side. Passenger side will use rear mount position as well. Torque bolts to 16ft-lbs.

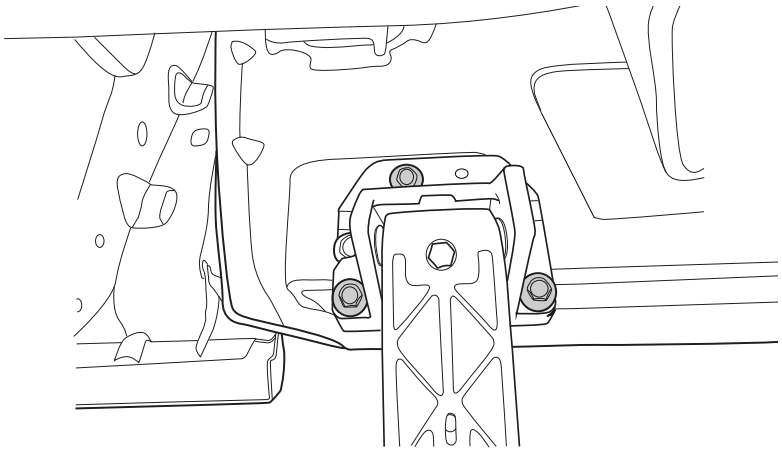

9

Set front body mount plate (25) to body.. Driver side shown. Use supplied Conical washer bolts to attach as shown, At the pinch weld Use a T27 Torx driver and torque bolts to 6ft-lbs. Next torque bolts to 16 ft-lbs.

If crash bracket is not present use supplied spacer (22) in place of bracket. Spacer can be inserted after body mount is up into position. Spacer will be held in place by drilling and pop riveting into place.

Rivets will be installed in step 38 & 39.

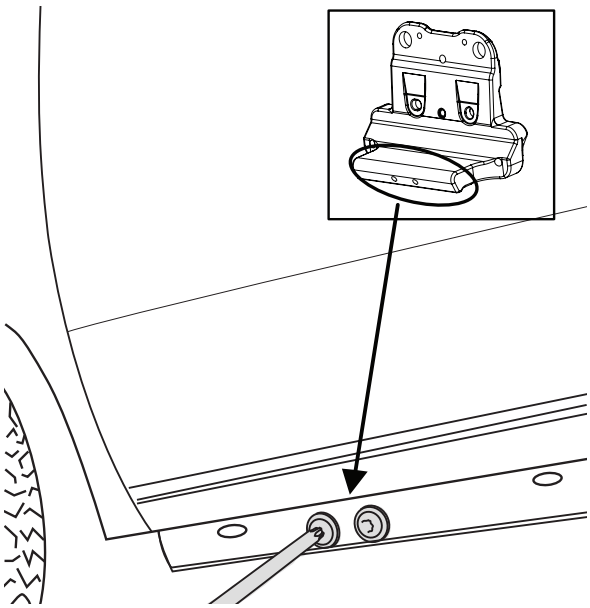

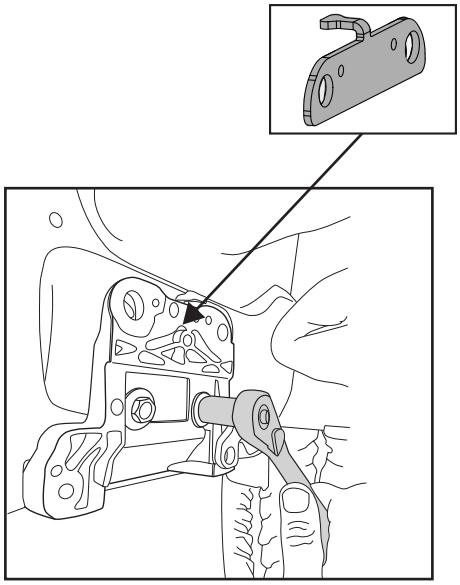

10

Front Drive Linkage: Use 3 of the supplied conical washer bolts (8) to attach linkage to body mount plate. Torque bolts to 16ft-lbs.

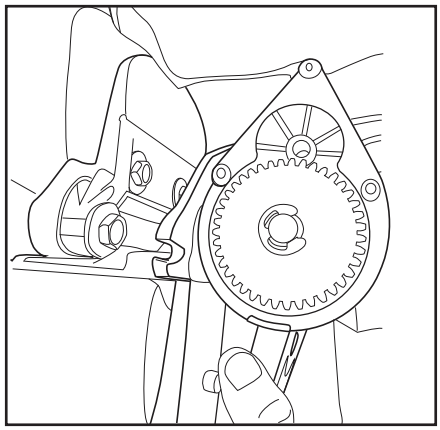

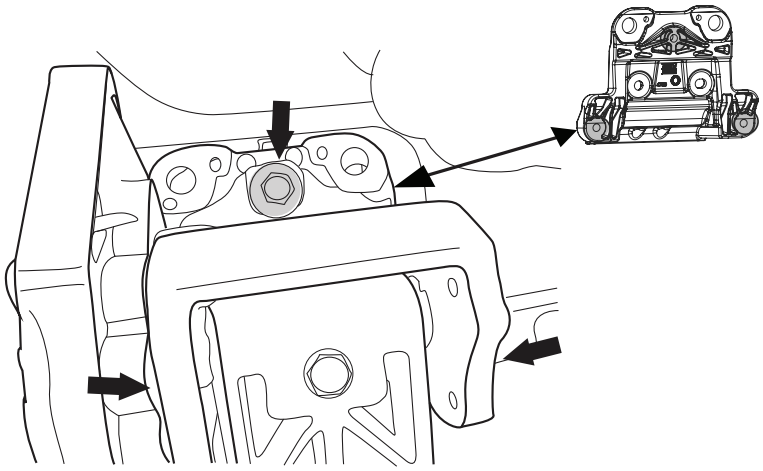

11

The jogs in the lower part of the linkages point toward one another, as shown, Drive (motor) Linkage in the Front and Idler Linkage in the Rear. Note: Linkage position described in parts list on page 3.

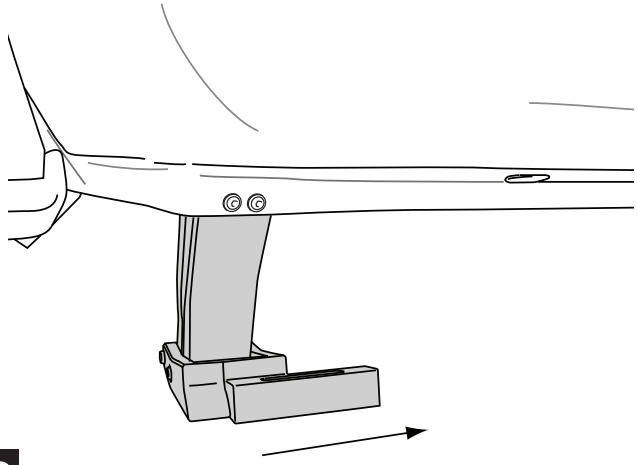

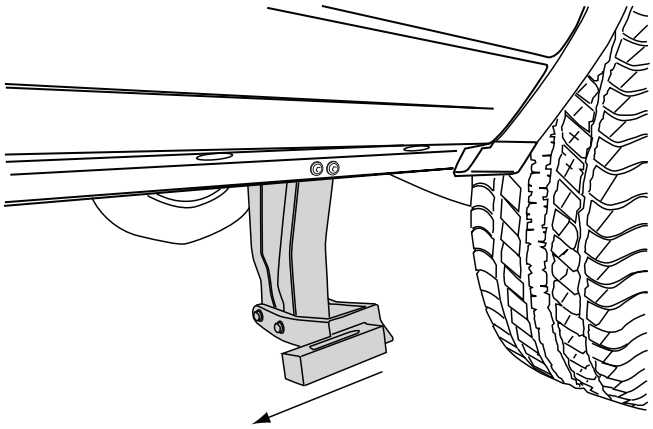

12

Install boards: Slide mounting T-Nut of board into position and attach to linkages using bolts (10). Shift board forward as much as possible for proper clearance. The end of board/end cap will nest into linkage lower mount 1/2” when positioned correctly. **With boards in extended position step on boards to seat linkages. Walk the length of the board taking bouncing steps. DO NOT JUMP ON BOARD! Verify that board end caps do not contact the pinch weld. If Endcaps make contact loosen 4 button head screws at pinch weld. Walk the length of the board and apply weight to the center of the board and while applying weight retighten button head screws at pinch weld.**

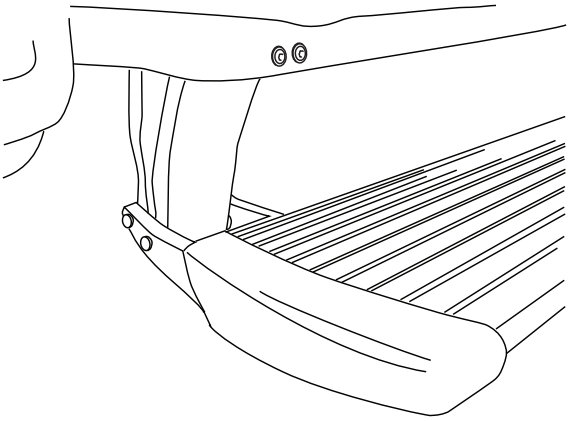

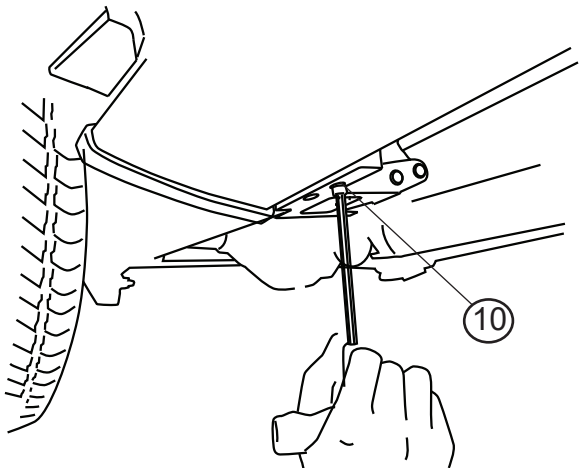

Torque to 10 ft-lbs. (13.5 Nm)

For instructions on how to adjust board due to pinchweld Interference, scan QR Code to watch video, or type the following link to your browser: https://youtu.be/ITbAeixVKdQ

13

Prepare large tie-wraps for mounting Power Step Controller. Loosely loop tie-wraps around large bundle of wires behind battery in engine compartment.

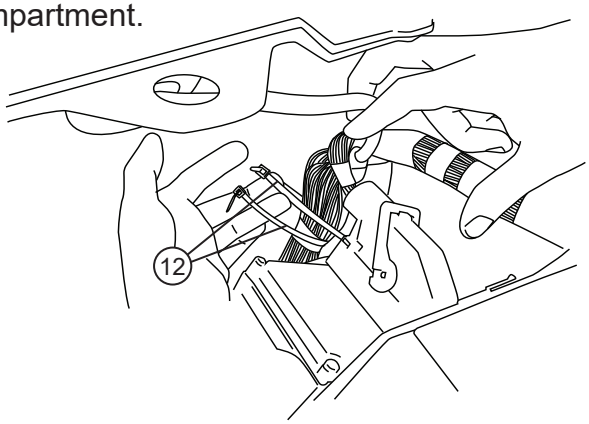

14

Insert controller into tie-wrap loops and cinch down securely. The tie-wraps should cinch down into channels on controller surface.

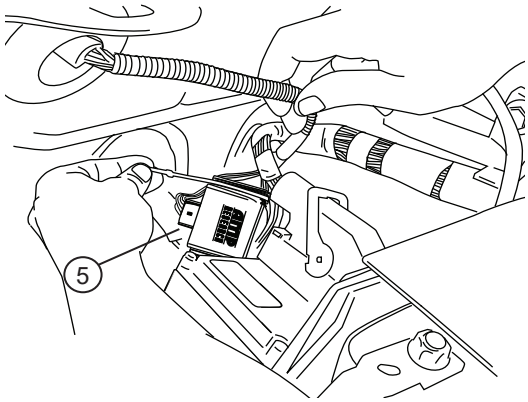

15

Remove fuses from Power Step Wire Harness.

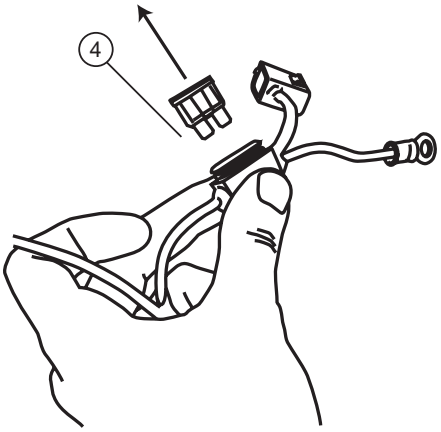

16

Connect power leads from Controller, Red to positive battery terminal and Black to the vehicle body ground as shown.

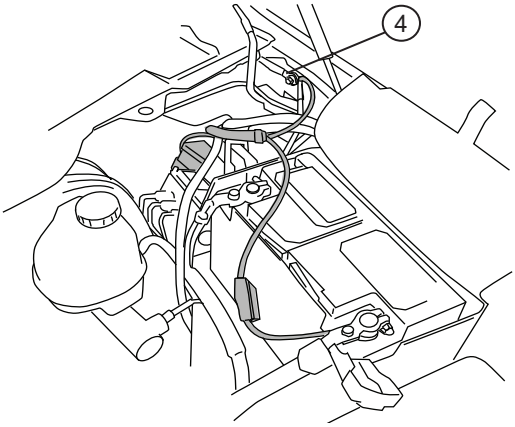

10mm

Locate large rubber wire boot on driver side firewall as shown below. Slice small opening as shown below to run trigger wires through.

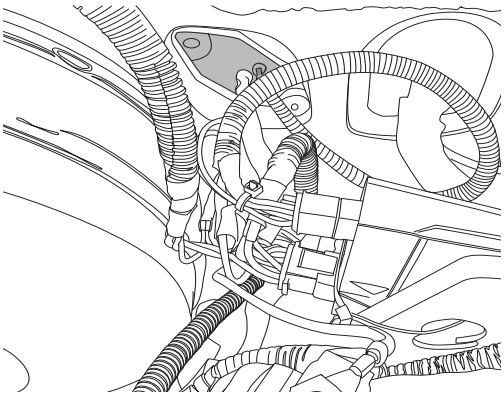

17

Tape leading end of wires together and push through rubber boot to cabin side of the firewall. Silicon lubricant may be used for ease of passage. The trigger wires will come out just above and to the left of the brake pedal.

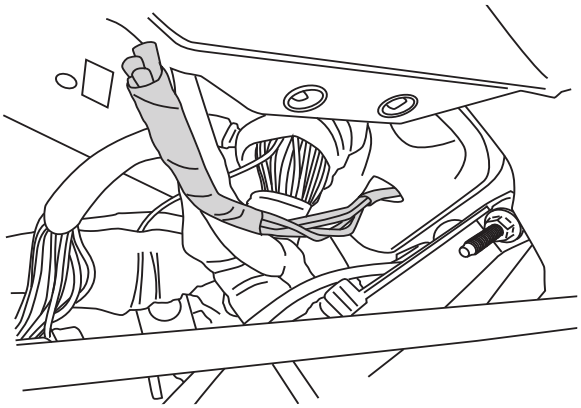

18

Plug OBD II (21) to port, tuck wires up and away to prevent snagging when entering and exiting the vehicle.

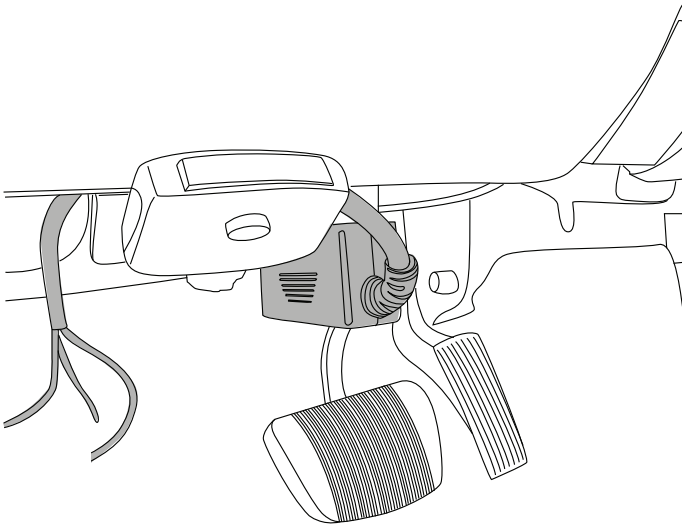

19

Locate the box mounted to the side of the E-brake pedal bracket, and find the white plug. **Note:** To gain better access to the plug, you can remove the two grey plugs.

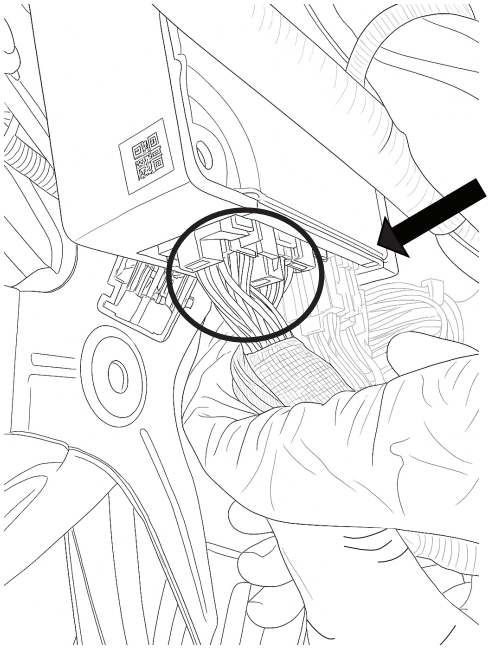

20

Locate the **blue with white stripe** wire, and the **white** wire on the right end of the plug. Use supplied posi-taps (24) to connect the blue wire on the DSM to the white wire on the factory plug.
Next, connect the **white** wire on the DSM to the **blue with white stripe** on the factory plug.

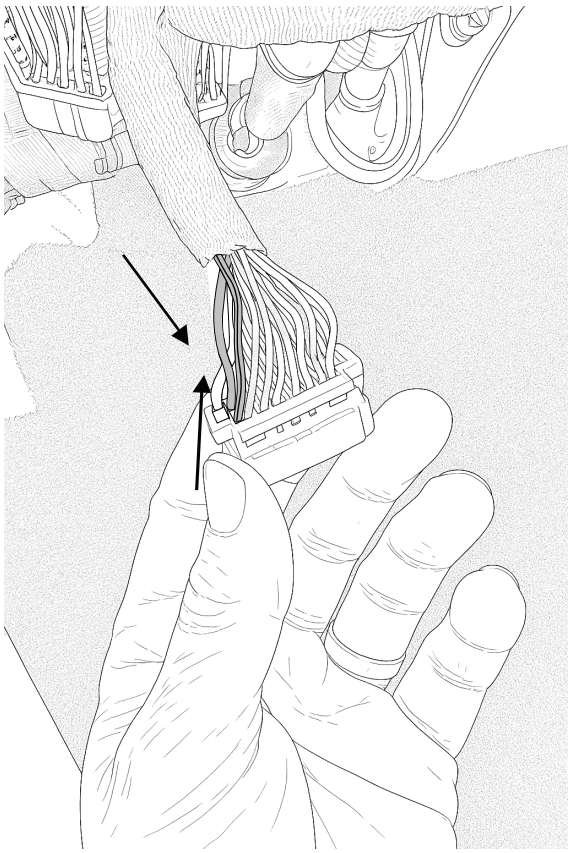

21

OBD II install: Use Supplied Posi-Lock™ (13) connector to attach the Plug and Play Module to the Harness. Attach matching colors on the harness to the wires on the module. Plug in module to OBD II port on the vehicle. Secure harness with supplied tie wraps (11).

Note: If the OBD II pass thru harness (76404-01A) was purchased see install sheet supplied in packaging. The pass through harness allows for an open port for other accessories. See below for a brief description.

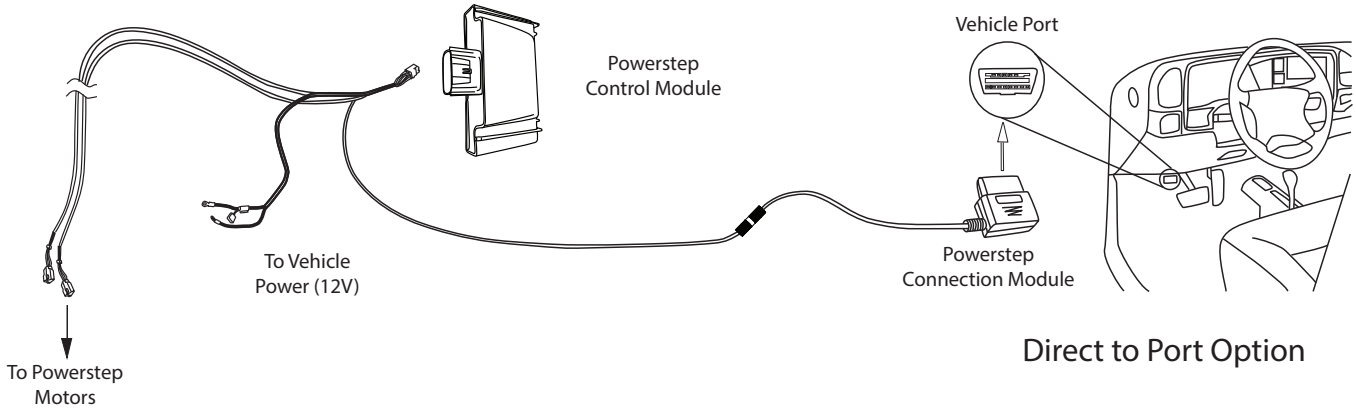

Direct to Port Option

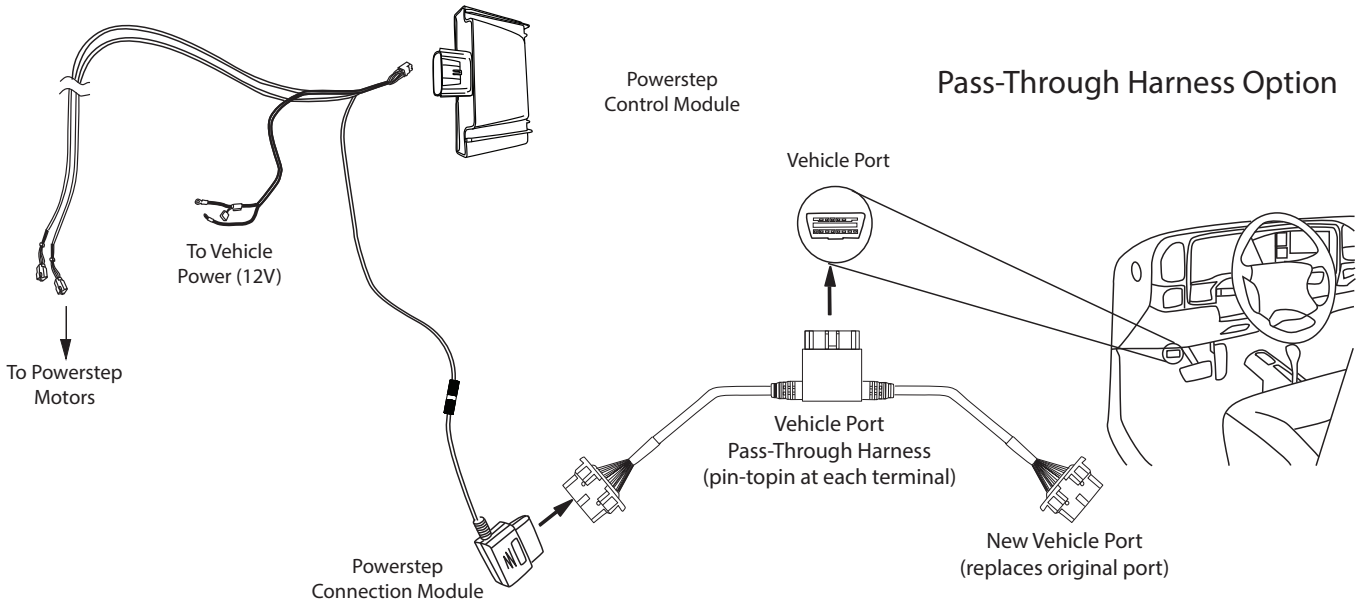

Pass-Through Harness Option

Route the two Wire Harness legs down over the wheel wells toward Motor Linkages, long leg across to the passenger side.

Secure harness with tie wraps.

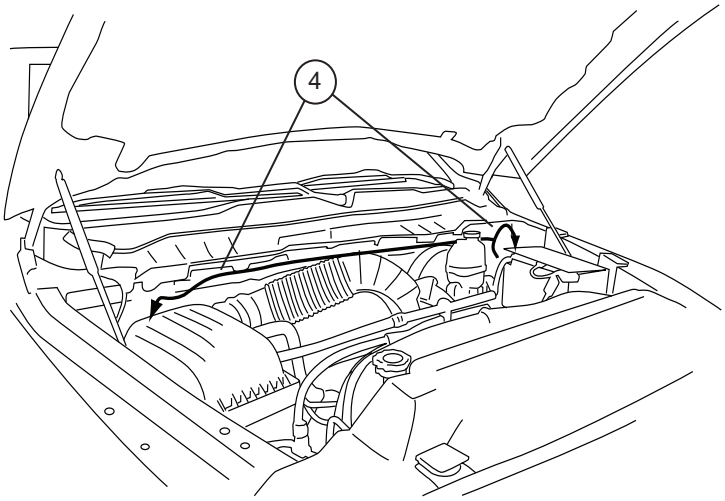

23

On driver side, run Wire Harness leg down and along underside of the vehicle floor and frame to front Drive Linkage. Connect harness to motor and secure harness with tie wraps. Route remainder of wire harness towards rear linkage assembly for LED lights.

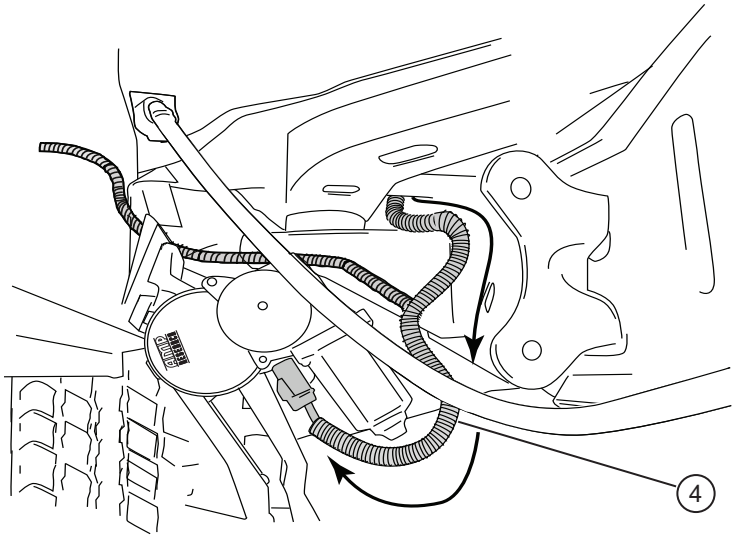

24

On Passenger Side, run Wire Harness leg down and along underside of the vehicle floor and frame to front Drive Linkage. Connect harness to motor and secure harness with tie wraps. Route remainder of wire harness towards rear linkage assembly for LED lights.

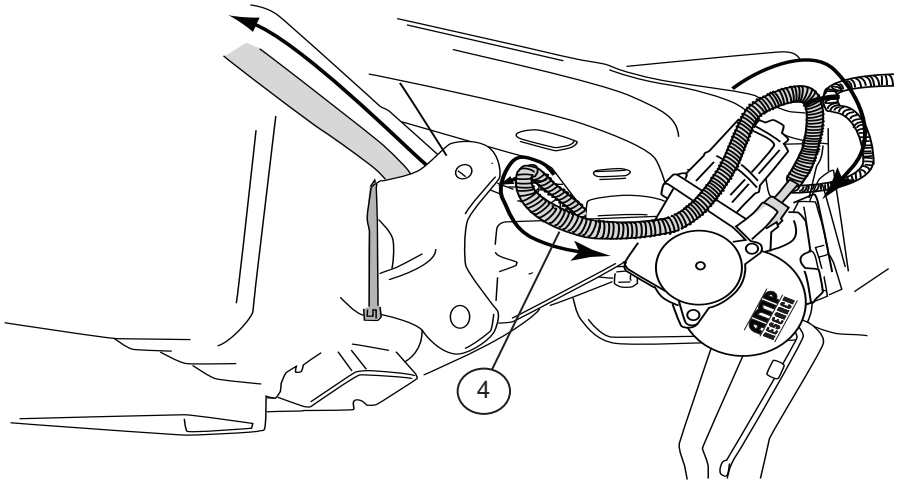

25

On each side of the vehicle measure from the front edge of door line on the pinch weld to the specified lengths below. Measure at 22” for the front LED Light and 64-3/4” for the rear LED Light. **Note for Quad cabs mount lights at 22” and 54” for Regular cabs mount lights at 10” and 45”.**

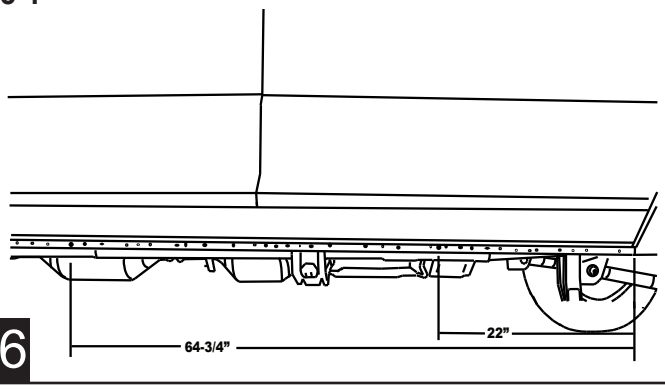

26

Drill a 9/32” hole through the pinch weld at marked locations. Debur all holes. After drilling apply paint to holes to prevent rusting.

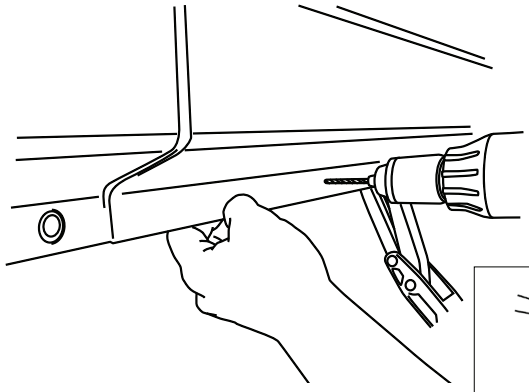

27

Insert grommet into drilled holes. Insert lamp wires through the grommets. (Silicon lube will help wires slip through grommets.)

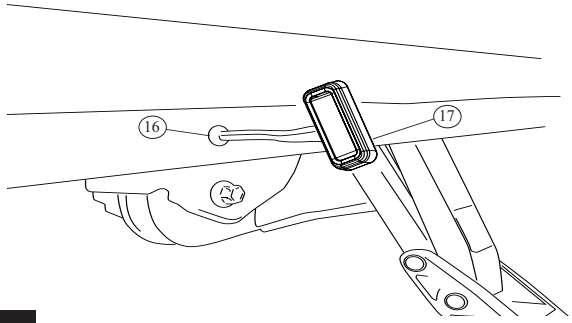

28

Affix lamp to rocker panel surface. Make sure lamp is affixed to a flat, clean surface.

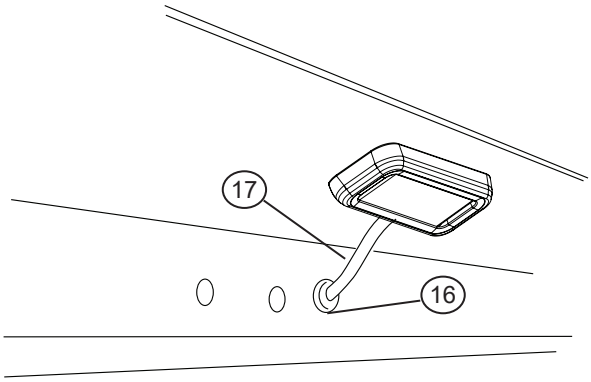

29

Using supplied butt connectors, connect the lamp wires. Red to Red, Black to Black. Once Crimped use heat gun to shrink tube.

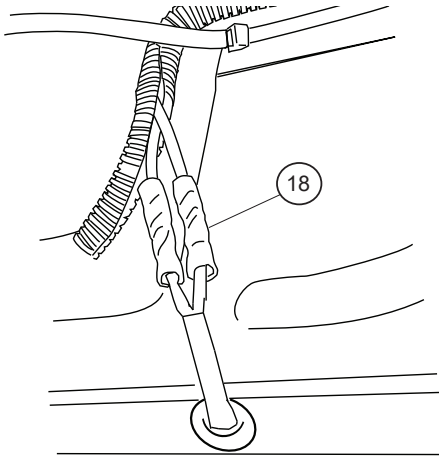

30

Close and wrap with conduit and electrical tape. Secure all loose wires with cable ties, with lamp wires pulled upward to avoid any wire snagging.

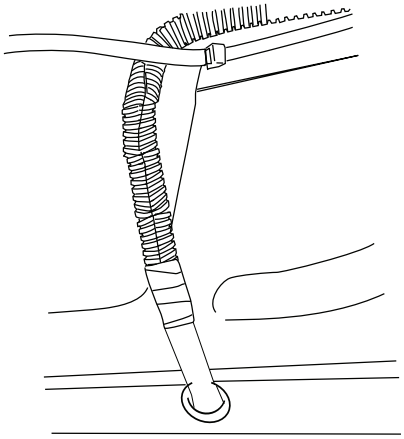

31

Install boards: Slide mounting T-Nut of board into position and attach to linkages. Shift board forward as much as possible for proper clearance. The end of board/end cap will nest into linkage lower mount 1/2” when positioned correctly. With doors open Reinstall fuses to wire harness.

With boards in extended position step on boards to seat linkages. Walk the length of the board taking bouncing steps. DO NOT JUMP ON BOARD! Verify that board end caps do not contact the pinch weld.

If Endcaps make contact loosen 4 button head screws at pinch weld. Walk the length of the board and apply weight to the center of the board and while applying weight retighten button head screws at pinch weld.

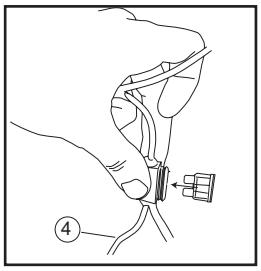

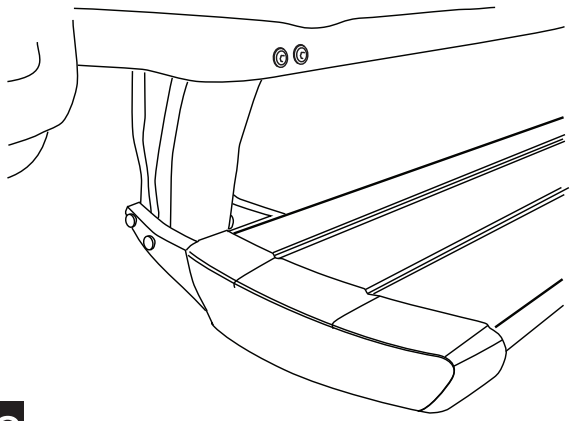

32

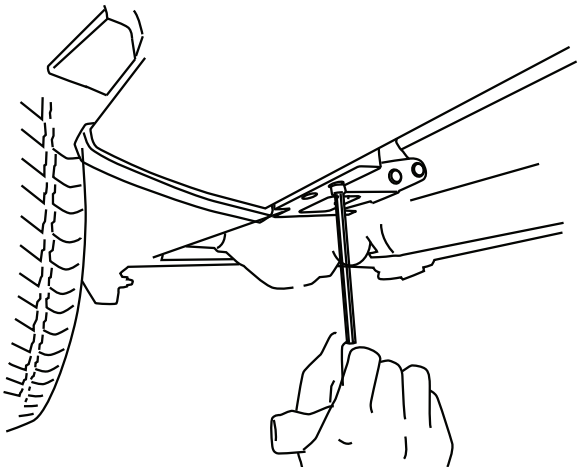

Torque to 10 ft-lbs. (13.5 Nm)

With linkage resting square on the hex bolts Using a 3/16” Drill bit, drill both upper holes in linkage through sheetmetal. After drilling apply paint to holes to prevent rusting.

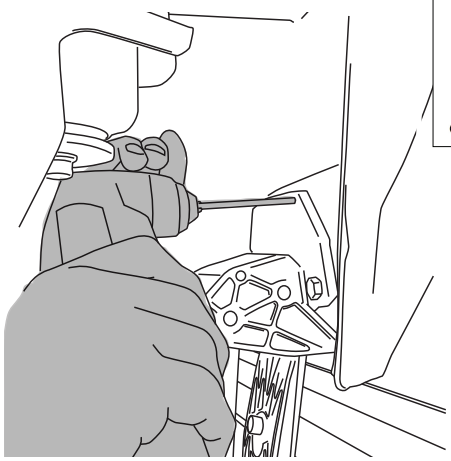

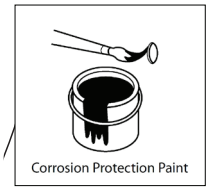

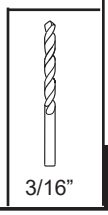

33

Using a Rivet Gun install rivets (21).

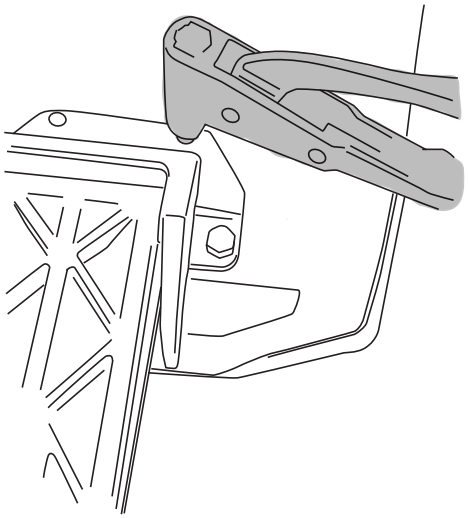

34

Check that all doors activate the Power Step and the LED Lights work when doors open and close. Reinstall any remaining trim panels.

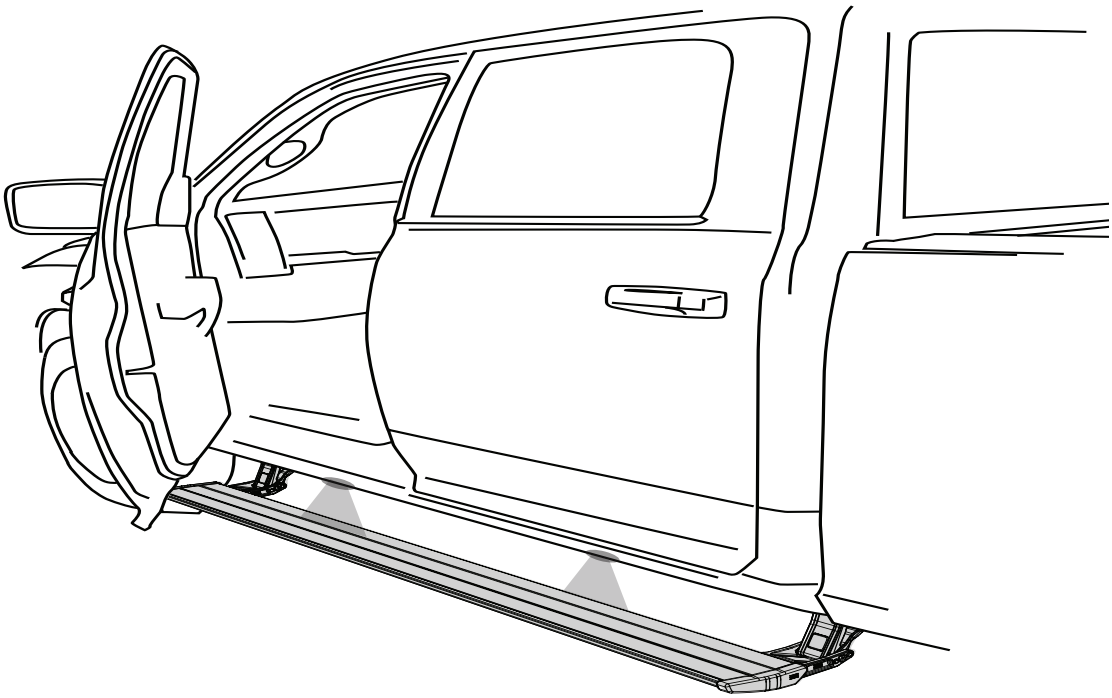

FINAL SYSTEM CHECK
Check that all doors activate the PowerStep and the LED lights work when doors open and close.
NORMAL OPERATION: When the doors open, PowerStep automatically deploys from under the vehicle. When the doors are closed, PowerStep will automatically return to the stowed/retracted position. ***Note that***

CORRECT OPERATION OF LIGHTS: All four lamps will illuminate upon opening any door of vehicle. Lamps will stay on until restowing of both Power Steps or until 5 minutes has expired with the doors open. When the lights timeout after 5 minutes, they can be reillumintated by closing and opening any door of vehicle.

35

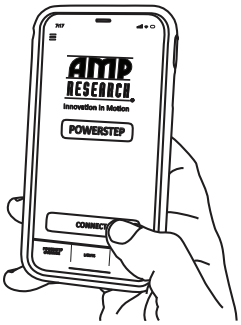

Download our Smart Series App on your Android phone or iPhone by scanning the QR code below and follow the instructions. Or visit your app store and search "AMP Research Powerstep" to download app.

SCAN ME

AMERICAN DESIGNED & ENGINEERED

Thank you for your recent RealTruck purchase.

REGISTER YOUR PRODUCT TODAY FOR FASTER SERVICE & PRODUCT UPDATES

Please visit:
https://realtruck.com/warranty-registration/
or scan the QR Code

SCAN ME

Product Registration Benefits:

• Ensure we have your purchase receipt and product info in our system which is required for warranty.

• Faster and easier access to customer service and tech support in the unlikely event you need warranty or product support.

• Registration helps us keep you up to date on product information and offers.

To view other RealTruck products that may be offered for your vehicle.

Please visit: www.realtruck.com

Rev 05.30.24

AMP RESEARCH PowerStep™

Congratulations on your purchase of the genuine AMP Research PowerStep! Here's what you should know...

POWER-DEPLOYABLE RUNNING BOARDS OPERATION: AMP Research PowerStep running boards automatically move when the doors are opened to assist entering and exiting the vehicle.

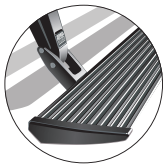

Automatic power deploy:
The running boards will extend down and out when the doors are opened.

Automatic power stow:
The running boards will return to the stowed position when the doors are closed. There will be a 2-second delay before the running boards move to the stowed position.

Automatic stop:
If an object is in the way of the moving running board, the running board will automatically stop. To reset, clear any obstruction, then simply open and close the door to resume normal operation.

Manually set in the deployed (OUT) position for access to the roof:
The running boards can be manually set in the deployed position by firmly holding the step down with your foot while at the same time closing the door. To resume normal operation, open and close the door.

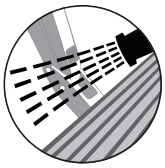

Maintenance: In adverse conditions, debris such as mud, dirt, and salt may become trapped in the running board mechanism, possibly leading to unwanted noise. If this occurs, manually set the running boards to the deployed position and flush the front and rear hinge arms with a high-pressure car wash wand. Avoid spraying the motors directly. After washing, apply silicone spray lubricant to the hinge pivot pins. Do not apply silicone, wax or protectants like Armor All® to the running board stepping surface.

Caution! Keep hands away when the running board is in motion.

5-YEAR LIMITED WARRANTY

AMP RESEARCH warrants this product to be free from defects in material and workmanship for FIVE (5) YEARS FROM DATE OF PURCHASE, provided there has been normal use and proper maintenance. This warranty applies to the original purchaser only. All remedies under this warranty are limited to the repair replacement of the product itself, or the repair or replacement of any component part thereof, found by the factory to be defective within the time period specified. The decision to repair or replace is wholly within the discretion of the manufacturer.

This warranty specifically excludes labor. If you have a warranty claim, first you must call our factory at the number below for instructions. You must retain proof of purchase and submit a copy with any items returned for warranty work. Upon completion of warranty work, if any, we will return the repaired or replaced item or items to you freight prepaid. Damage to our products caused by accidents, fire, vandalism, negligence, misinstallation, misuse, Acts of God, or by defective parts not manufactured by us, is not covered under this warranty.

ANY IMPLIED WARRANTIES OF MERCHANTABILITY AND/OR FITNESS FOR A PARTICULAR PURPOSE CREATED HEREBY ARE LIMITED IN DURATION TO THE SAME DURATION AND SCOPE AS THE EXPRESS WRITTEN WARRANTY. OUR COMPANY SHALL NOT BE LIABLE FOR ANY INCIDENTAL OR CONSEQUENTIAL DAMAGE.

Some states do not allow limitations on how long an implied warranty lasts, or the exclusion or limitation of incidental or consequential damages, so the above limitations or exclusions may not apply to you. This warranty gives you specific legal rights, and you may also have other rights that vary from state to state.

FOR WARRANTY ISSUES WITH THIS PRODUCT PLEASE CALL AMP RESEARCH TECH SUPPORT 1-888-983-2204

WARNING

Be sure to read and precisely follow the provided instructions when installing this product. Failure to do so could place the vehicle occupants in a potentially dangerous situation. After installing or reinstalling, re-check to insure that the product is properly installed.

The material that your product is made from can be recycled. Please also consider recycling the packaging that your product came in.