REALTRUCK AMP RESEARCH Power Step XL™

APPLICATION		AMP Part #
Jeep Wrangler JK 4Dr	2007-2018	77122-01A

INSTALLATION GUIDE

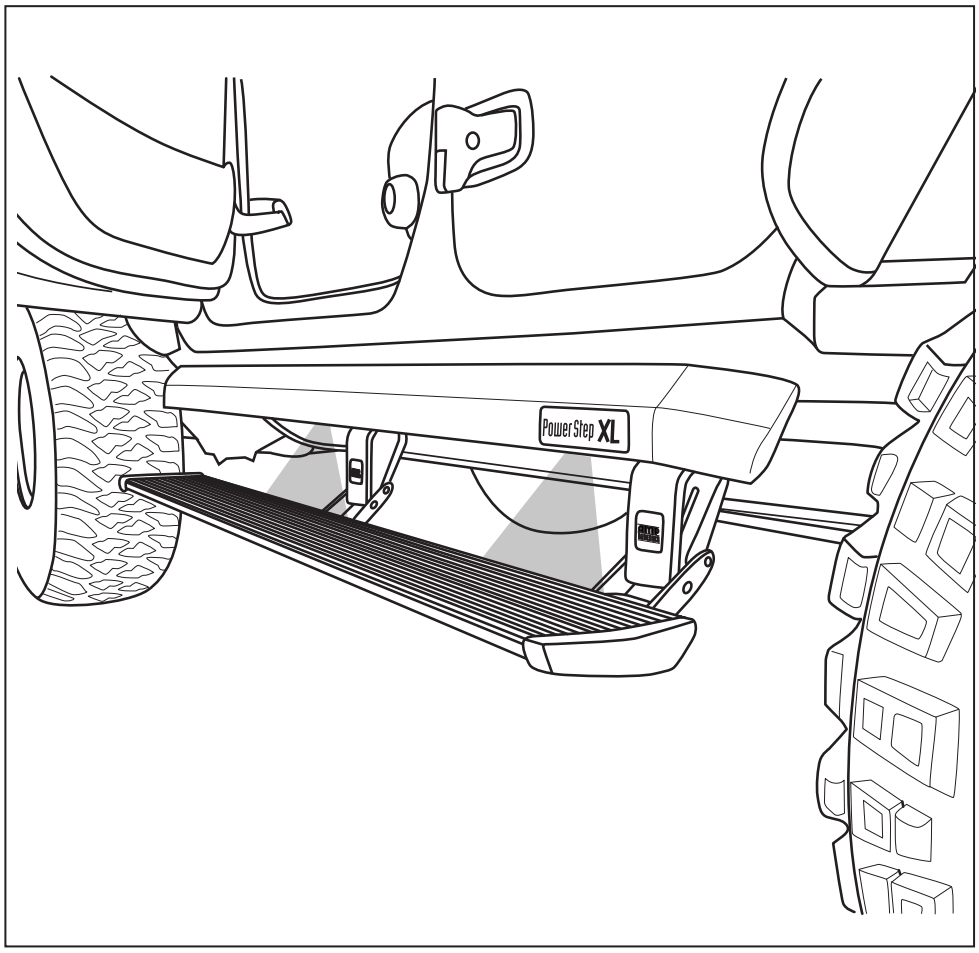

INSTALLATION TIME

3-5 Hours

Professional installation recommended

SKILL LEVEL

1 2 3 4

4= Experienced

TOOLS REQUIRED

- ❑ Safety goggles
- ❑ Measuring tape
- ❑ 10 mm socket
- ❑ 13 mm socket
- ❑ 1/2” socket
- ❑ Ratchet wrench and extension
- ❑ Wire crimpers
- ❑ Wire stripper / cutter
- ❑ 3/16” hex key wrench (allen wrench)
- ❑ 4mm hex key wrench (allen wrench)
- ❑ Electrical tape
- ❑ Weather proof caulking (silicone sealer)
- ❑ Silicone spray
- ❑ Torx T-25

WARRANTY

5-Year Limited Warranty

REALTRUCK TECH SUPPORT 1-888-983-2204 (Press 2) Monday - Friday, 8:00 AM - 5:00 PM EST

Designed and manufactured by RealTruck AMP Research® • Made in Mexico
Patent Protected. Please see our product site for applicable patents. www.realtruck.com/b/amp-research/
© RealTruck Group, Inc., 2026 • Five-year limited warranty. • Professional installation is recommended.

The motors must be attached to the linkage before mounting to vehicle.

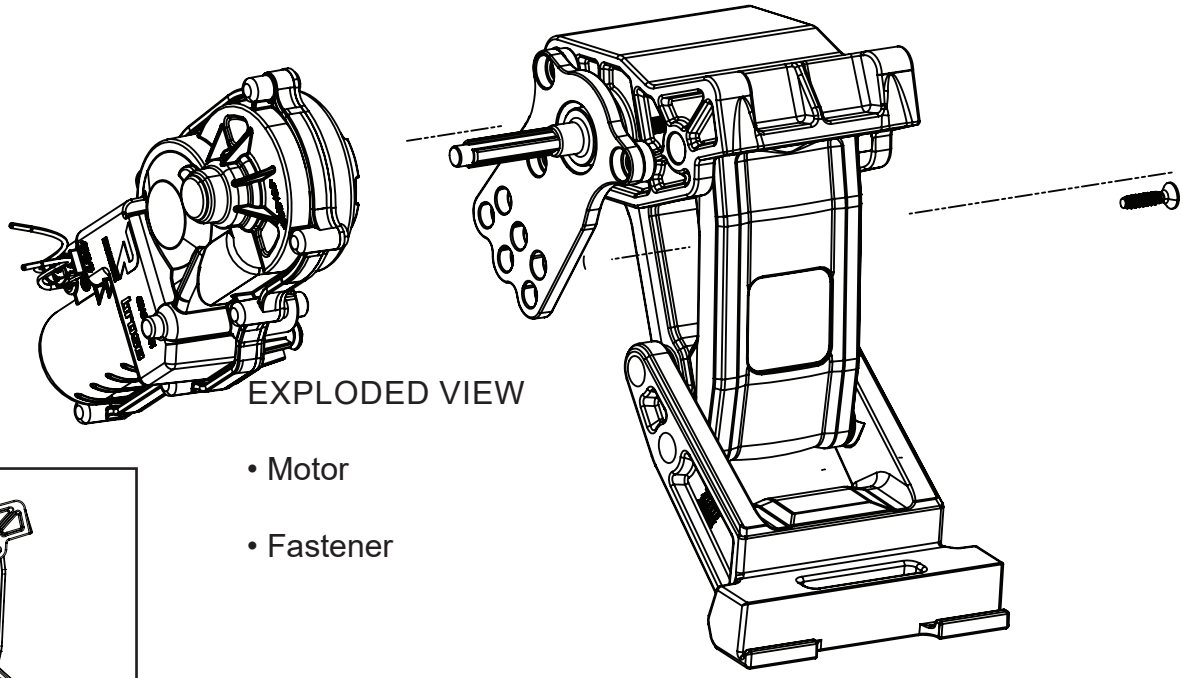

EXPLODED VIEW

- Motor
- Fastener

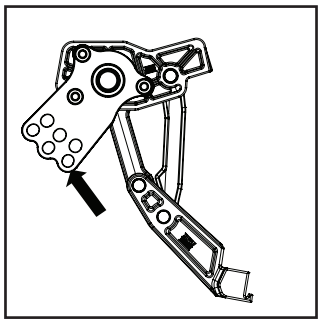

CAUTION: HANDLE WITH CARE.

To ensure our customers receive all components with full integrity, we pack the motors separate from their Linkage assemblies. This requires that the installer position and fasten the motor before continuing with the install. Please follow the instructions below and handle the assembly carefully.

CAUTION: Dropping the assembly or any excessive impact MAY cause damage to the motor.

Instructions:
1. Slide motor on to drive shaft.
2. Rotate motor by hand while on the shaft to postion it to the mounting plate (orientation as shown above).
3. Fasten motor to the motor mounting plate using supplied PT Screw with T-25 Torx driver. Tighten screw to 60 in-lbs (6.8 N·m). **Do not over torque.**

Note:
The motor and shaft have only three possible positions. Depending on the current position of the motor, motor/shaft and the orientation of the motor plate, it may be necessary to power it in order to align it correctly with the linkage and shaft during assembly so that the motor can be mounted to the mounting plate.
To do this:

1. Power up the motor.
2. Open the door to allow the motor to spin and reposition.
3. Once the motor times out, remove the fuse.
4. Assemble the motor onto the shaft.
5. Fasten motor to mounting plate.

This process may need to be repeated to achieve the correct alignment.

PARTS LIST AND HARDWARE IDENTIFICATION

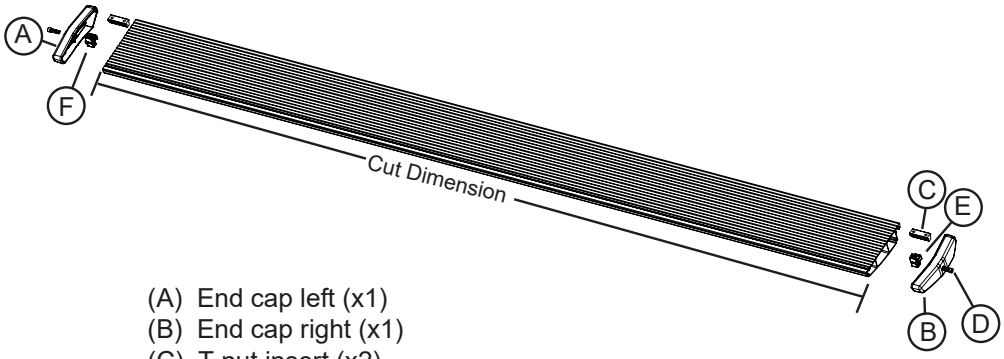

(A) End cap left (x1)
(B) End cap right (x1)
(C) T-nut insert (x2)
(D) Socket cap screw (x2)
(E) End cap wedge right (x1)
(F) End cap wedge left (x1)

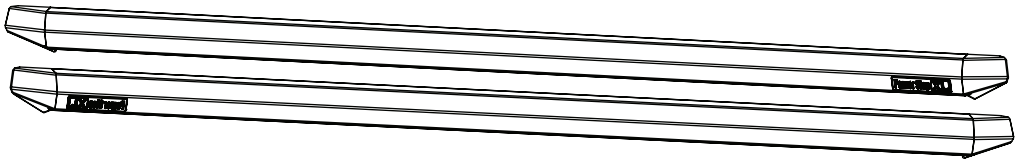

2 x2
Rail Assembly

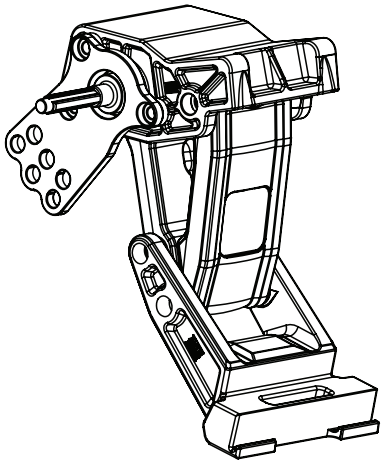

3 x2
Motor Linkage assembly
Driver

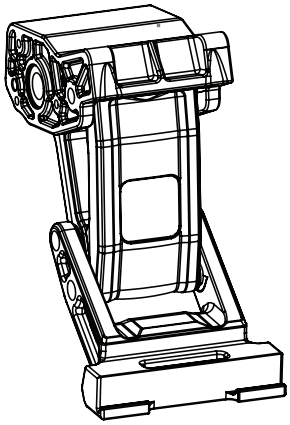

4 x2
Idler Linkage assembly

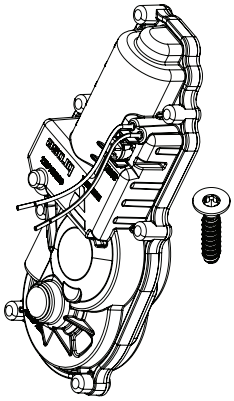

5 x2
Motor Assembly kit

PARTS LIST AND HARDWARE IDENTIFICATION

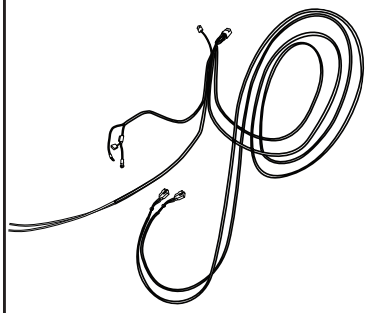

6 Wire harness

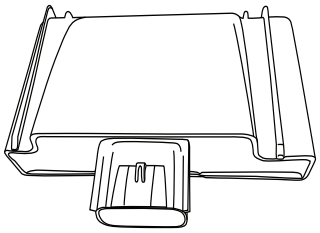

7 Controller STA

8 x4 Posi Tap

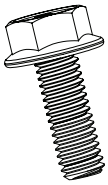

9 x8 5/16 Flange Bolt

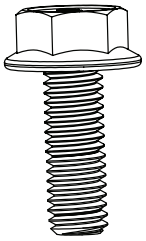

10 x6 M8 Flange Bolt

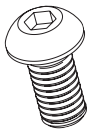

11 x10 5/16 Button Head Bolt

12 x4 M6 Flange Bolt

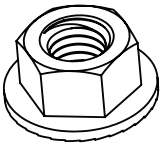

13 x12 M8 Flange Nut

14 x8 Socket Cap Screw

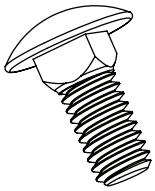

15 x14 5/16-18 Carriage Bolt

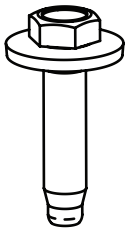

16 x12 M8 Hex Bolt w Conical washer

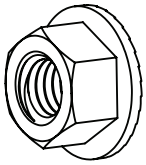

17 x24 5/16-18 Flange Nut

18 x10 Washer

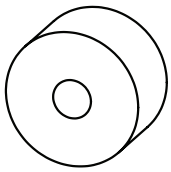

19 x4 Upper Mount Spacer

20 x2 U nut

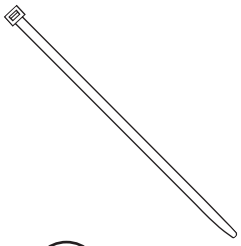

21 x20 Cable tie (7”)

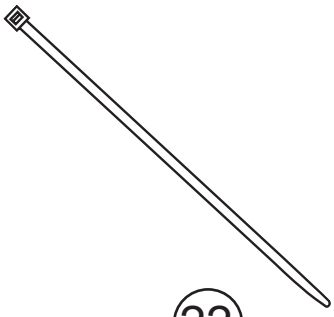

22 x2 Cable tie (11”)

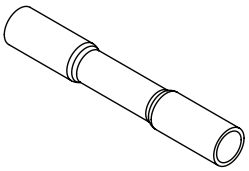

23 x8 Butt Connector

PARTS LIST AND HARDWARE IDENTIFICATION

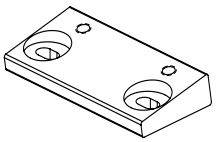

24 x2
Adaptor

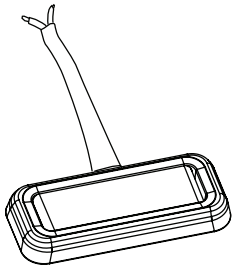

25 x4
LED Lamp

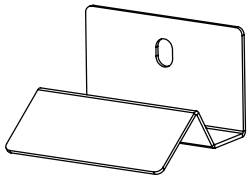

26 x4
LED Light Bracket

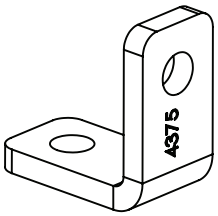

27 x4
Support Tab

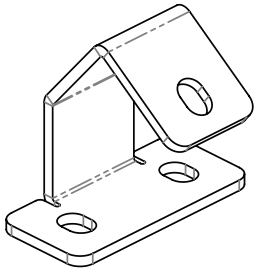

28 x2
Rail Support Bracket

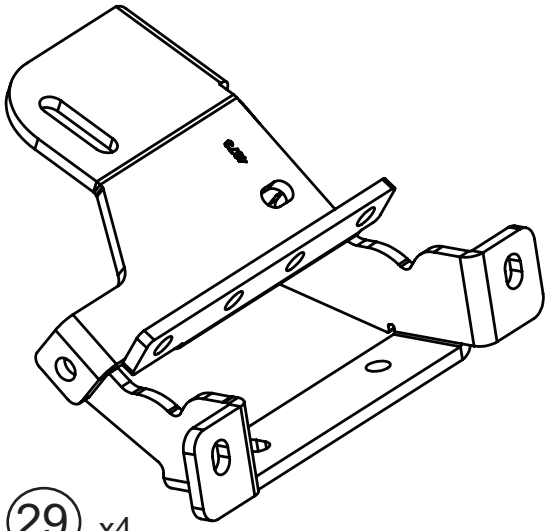

29 x4
Linkage mounting Bracket

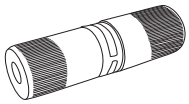

30 x4
Posi-Tite®

Locate rear linkage installation position in front of rear body mount

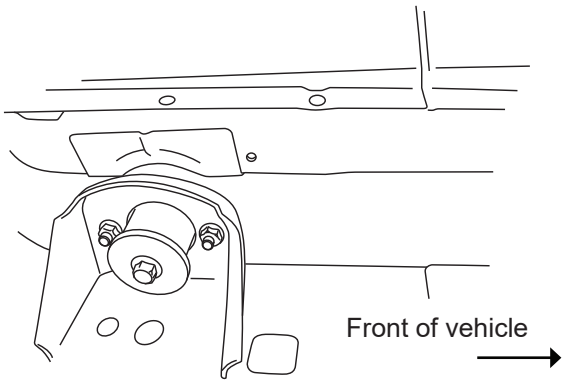

1

Install adaptor as shown

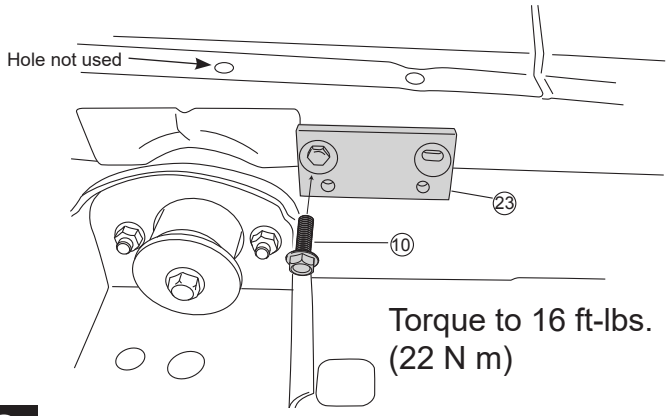

2

Assemble Support tab(27) to Linkage mounting bracket with supplied bolts(10) and nuts(17). Torque to 16ft-lbs. Next using flange bolt(10) and nut(13) thru support tab in bracket and tighten to 16ft-lbs.
Set bracket in place. Start with Button head bolts(11) thru pinch weld with flange nuts(17). Snug into position, start rear mounting bolt in threaded block using captive washer bolt(16).

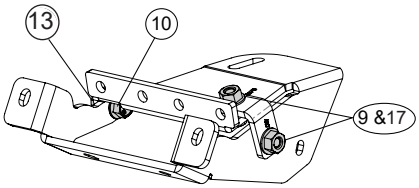

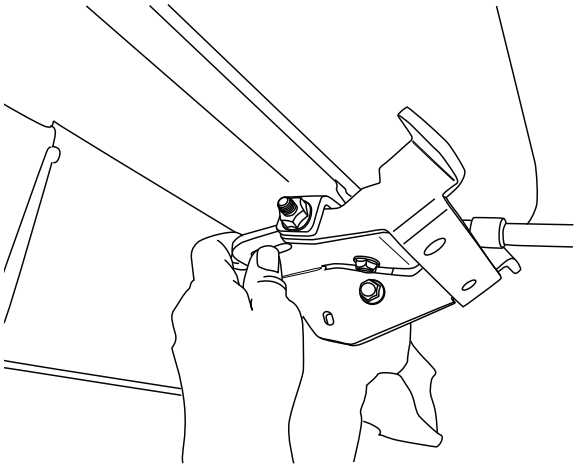

3

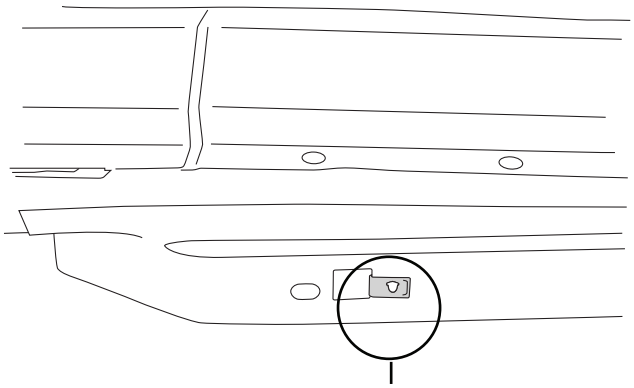

Install U nut (20) under vehicle, middle of front door for front motor linkage as shown. (Some vehicles with factory steps may already include this u-nut)

4

Front of vehicle passenger side

Set front linkage mounting bracket into position. Follow same mounting steps as step 3.

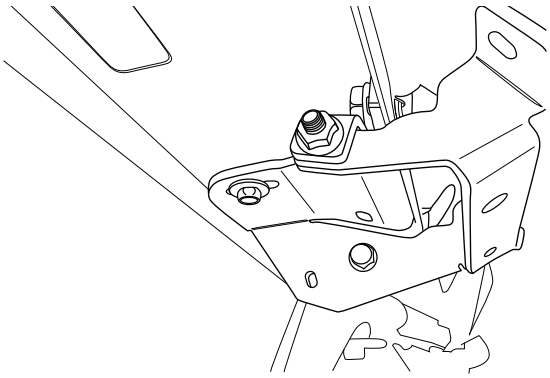

5

Slide 6 carriage bolts (15) into rail pocket of driver side rail. Add Light Bracket (26) to the 1st and 4th bolt counting from the front side. Insert Flange Nut (17) onto bracket tab to attach light brackets into position shown. Leave loose to allow for adjustment.

Driver side image shown below

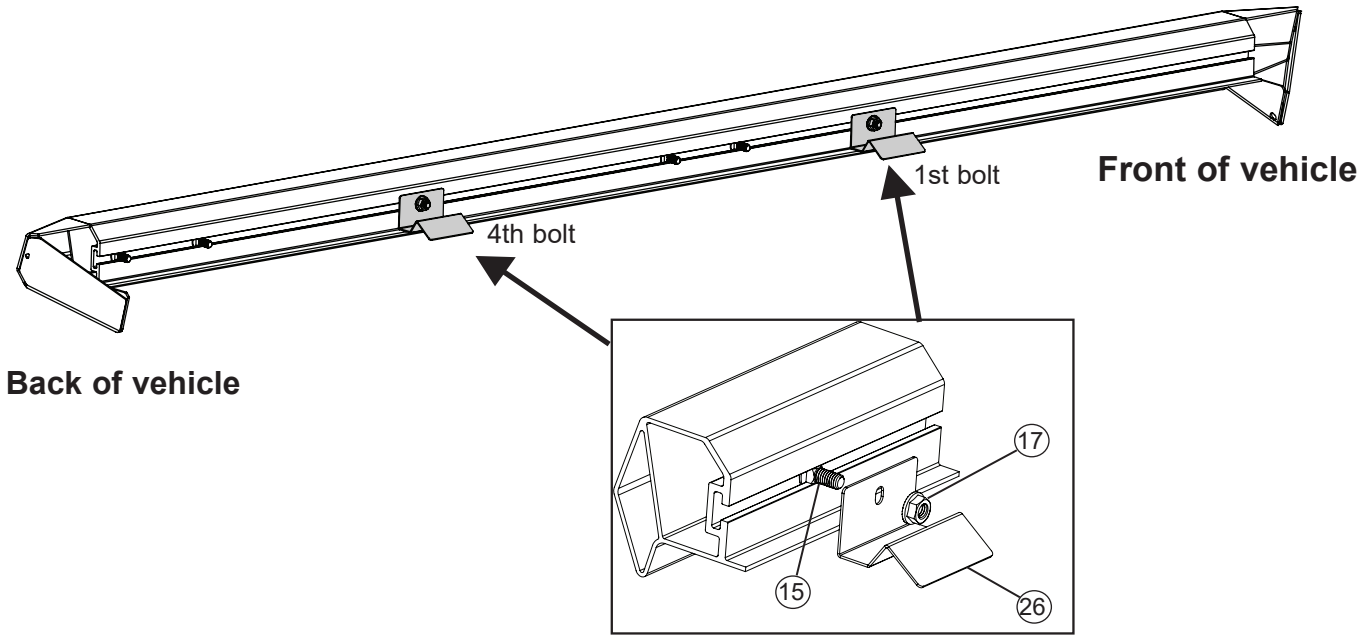

6

Adjust the remaining bolts to slide over brackets. Use supplied flange nuts (17) and attach rail to brackets. Center rail between body rocker and torque 4 flange nuts to 16 ft-lbs.

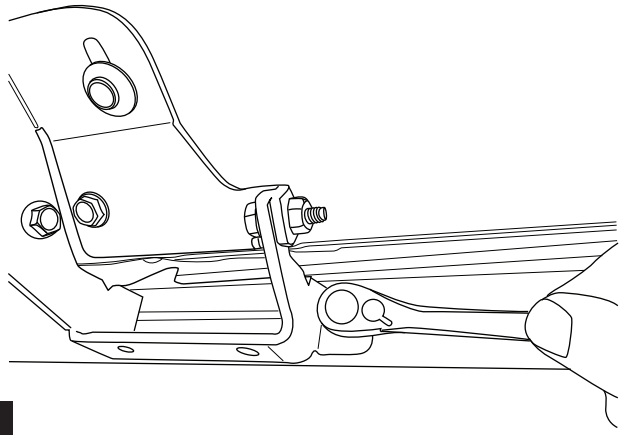

7

Attach front support bracket (28) by inserting carriage bolt (15) into rail and using supplied button head bolt (10), washer (18) and flanged nut (17) to pinch weld.

Torque bolts to 16ft-lbs.

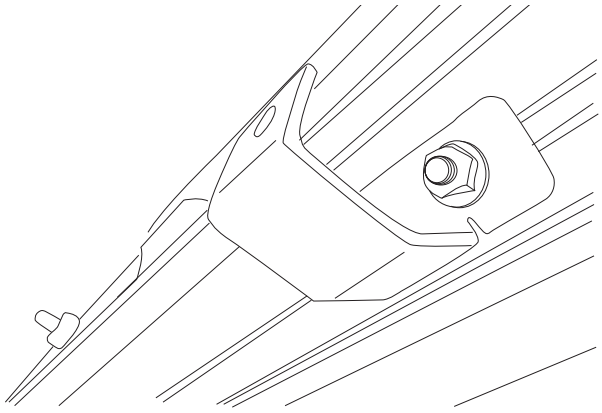

8

Install drive linkage onto front position and Idler linkage onto rear position. Install provided spacer (19)and m6 bolt (12) into upper mount as shown on both the drive and idler linkages. Do not tighten.

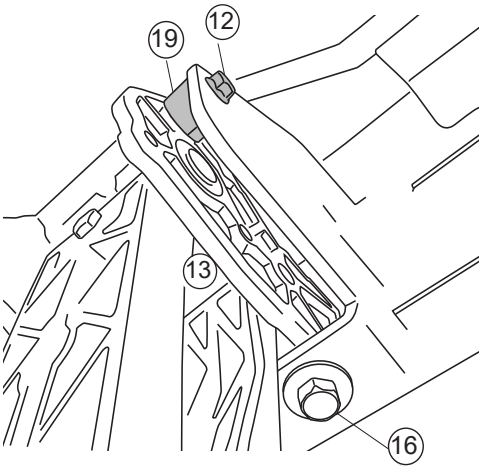

9

Slide mounting T-nut into position. Center board in rail pocket. Tighten fasteners to 10 ft-lb

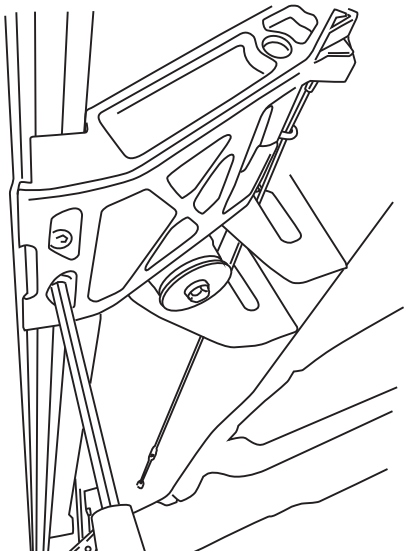

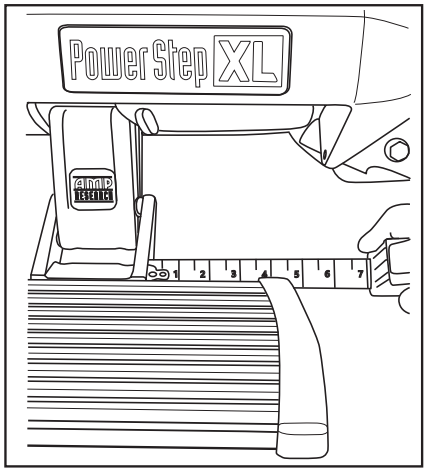

10

Using a 13mm socket, torque linkage bolts 4x (16) from step 3 to 16 ft-lbs. Next use a 10mm socket, torque linkage spacer bolt 2x (12) from step 6 to 8 ft-lbs.

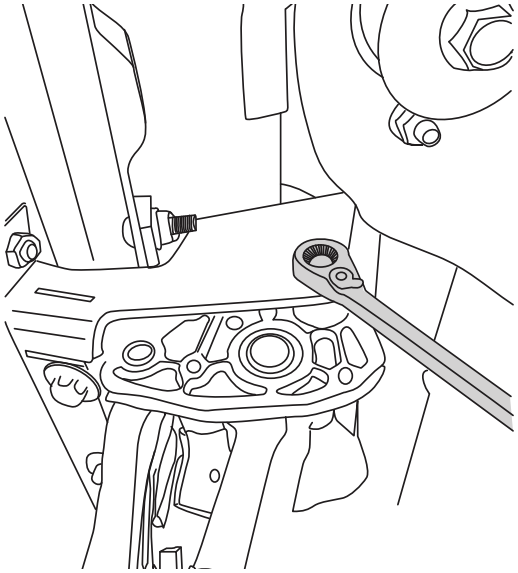

11

Remove fuses from Power Step Wire Harness.

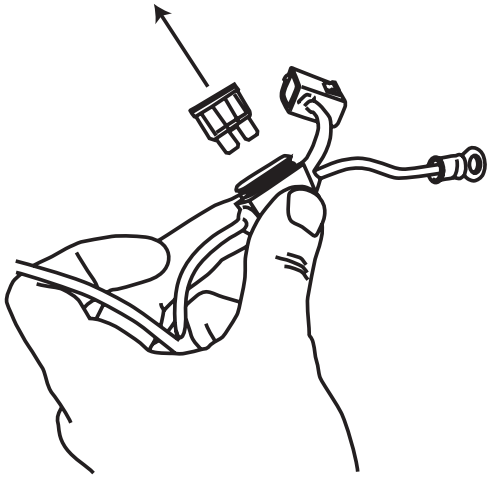

12

Install controller on passenger side at firewall. Secure with 11” cable ties. Connect Red wire to positive battery terminal and Black wire to negative battery terminal.

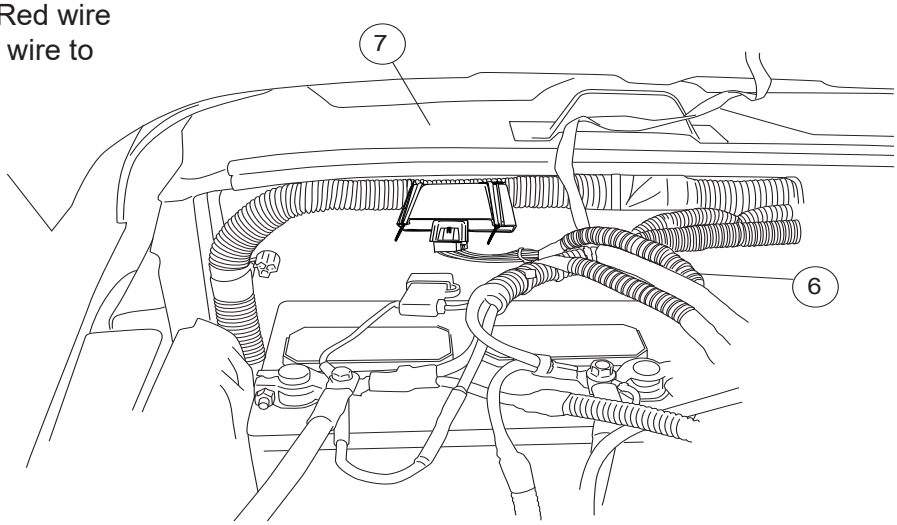

13

Route longest leg of wire harness across fire wall to driver side and under vehicle outside of frame rail. Route shortest leg of wire harness down fire wall and outside of frame rail on passenger side.

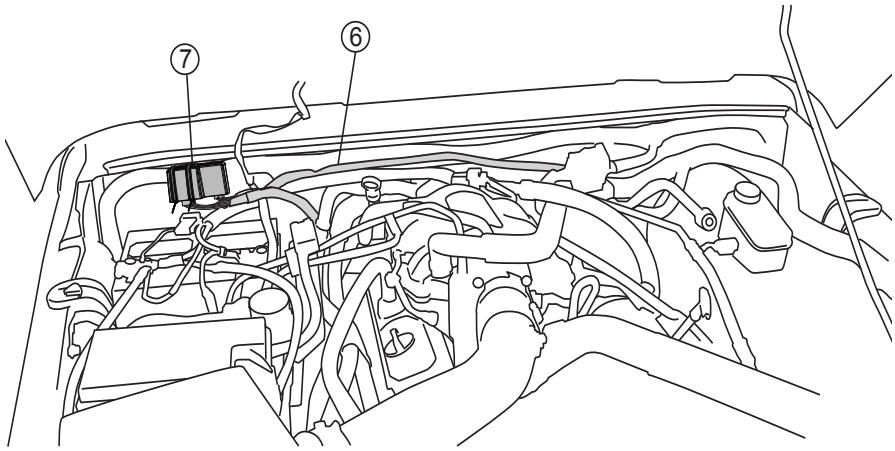

14

Remove passenger side front door sill.

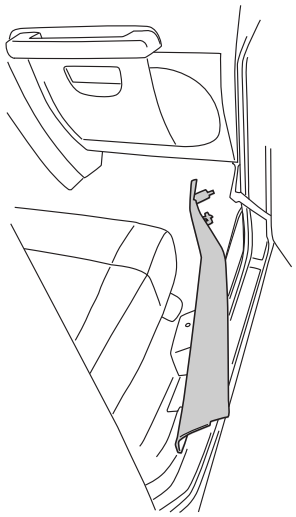

15

Lift carpet. Slit rubber grommet and pass trigger wires through grommet in floor into passenger compartment.

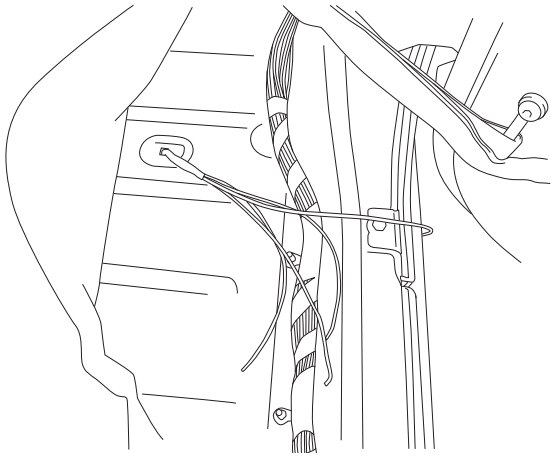

16

Posi-Tap™ instructions

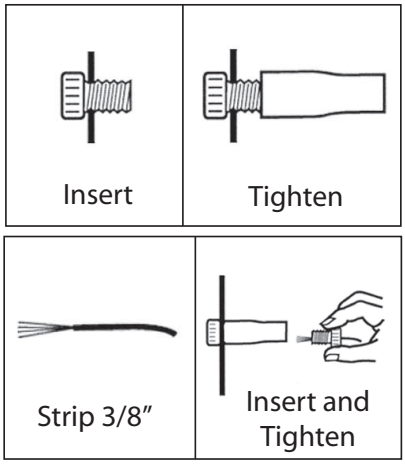

17

Use Posi-Tap connectors to connect Power Step trigger wires to like colored wires in the factory system as shown: Violet/White wire in loom coming from front door, Violet/Yellow and Violet/Grey in main loom in door sill. **Note: For door removal attach posi tap on chassis side of door harness.**

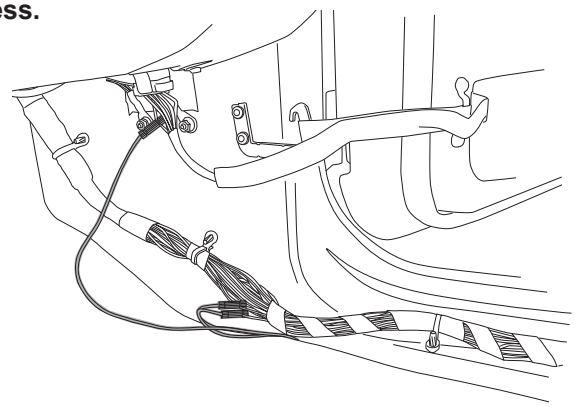

18

Remove driver side door sill and pull up carpet.

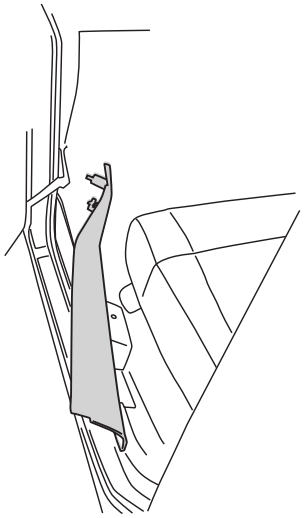

19

Route Violet wire under carpet to driver side door sill and connect to violet wire coming from door as shown. **Note: For door removal attach posi tap on chassis side of door harness.**

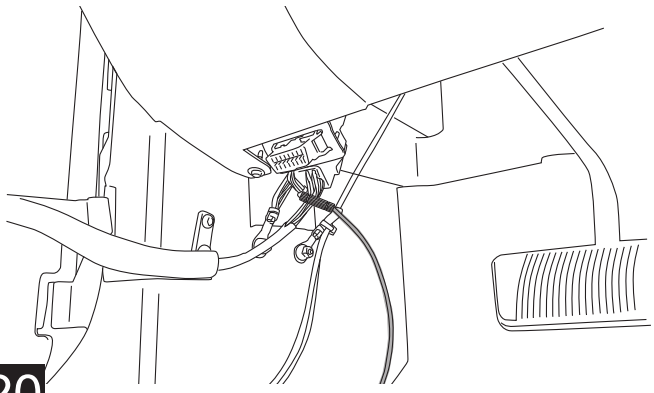

20

On driver side, run wire harness leg downand along underside of the vehicle floor and frame to Rear Drive Linkage. Connect the wire harness to the motor. Follow steps below for wire connection instructions. Then, proceed with securing harness with tie wraps.

Repeat step on passenger side.

Motor spinning the shaft clockwise direction:

1) First, install one Posi-Tite® (30) onto white wire from the motor. See image on right.

2) Install second Posi-Tite® (30) onto orange wire from motor. See image on right.

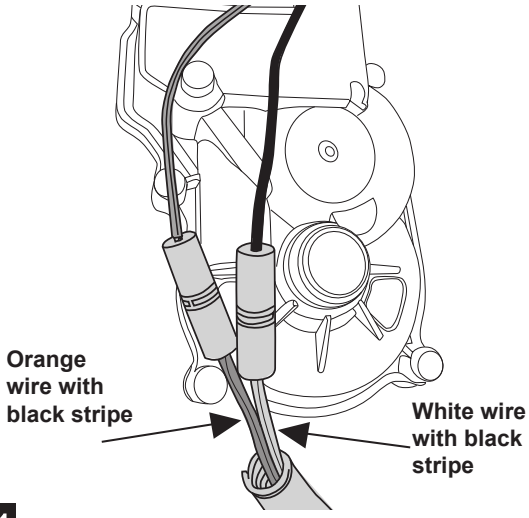

3) Next, connect the white wire with black stripe from the wire harness to the other end of the Posi-Tite® (30) that is connected to the all white wire from first step above.

4) Connect the Posi-Tite® (30) the orange wire from the motor with the orange with black stripe wire from the harness.

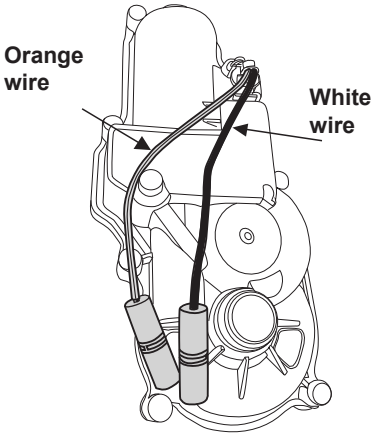

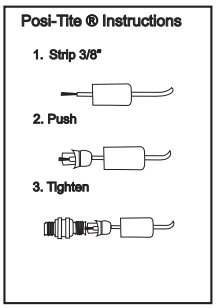

21

Affix LED lamps (25) to the light brackets (26) that were installed on rail in step 6. Slide bracket into desired position and tighten using 5/32” Allen key.

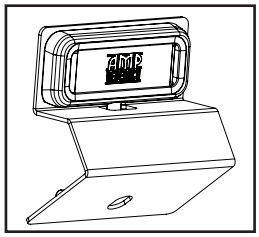

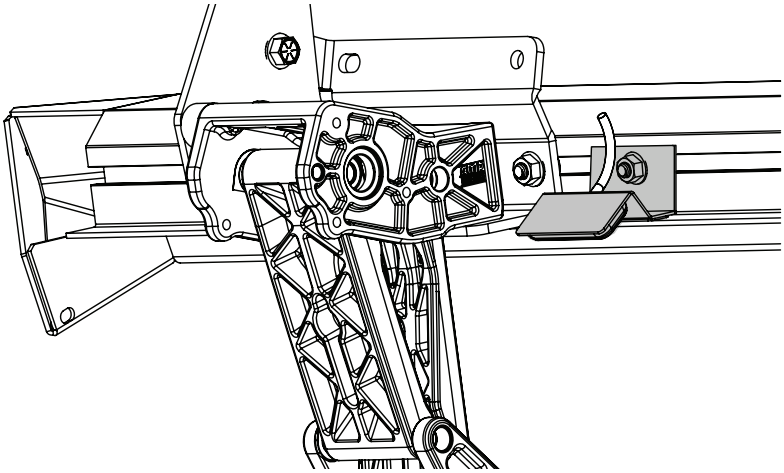

22

Using supplied butt connectors(23), connect the lamp wires. Red to Red, Black to Black. Once Crimped use heat gun to shrink tube. Close and wrap conduit with electrical tape. Secure all loose wires with cable ties. Pull lamp wires upward to avoid any wire snagging.

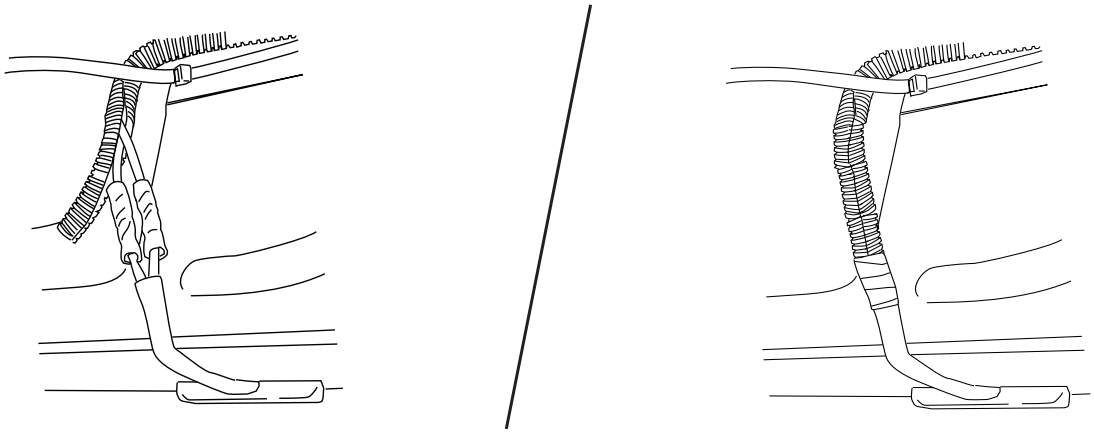

23

Reinstall Fuses from Powerstep Wire Harness. Check that all doors activate the Power Step and the LED Lights work when doors open and close. Reinstall any remaining trim panels.

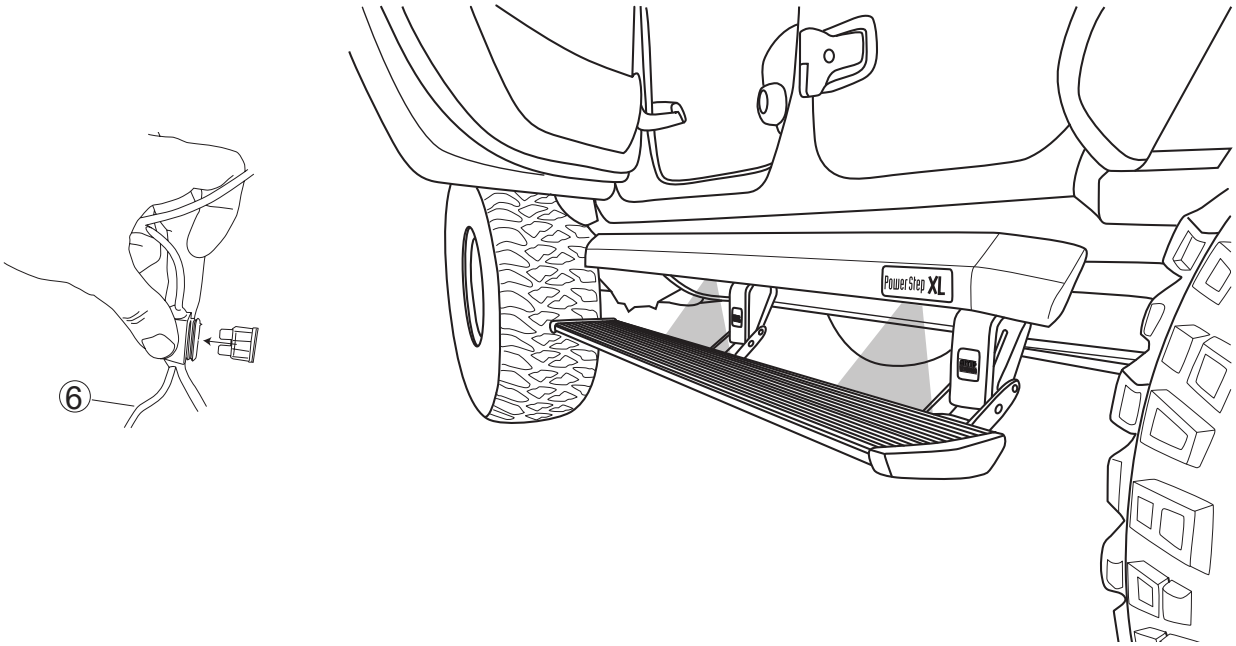

FINAL SYSTEM CHECK

Check that all doors activate the PowerStep and the LED lights work when doors open and close.

NORMAL OPERATION: When the doors open, PowerStep automatically deploys from under the vehicle. When the doors are closed, PowerStep will automatically return to the stowed/retracted position. ***Note that there is a 2-second delay before the PowerStep returns to the stowed/retracted position.***

CORRECT OPERATION OF LIGHTS: All four lamps will illuminate upon opening any door of vehicle. Lamps will stay on until restowing of both Power Steps or until 5 minutes has expired with the doors open. When the lights timeout after 5 minutes, they can be reillumintated by closing and opening any door of vehicle.

24

AMERICAN DESIGNED & ENGINEERED

Thank you for your recent RealTruck purchase.

REGISTER YOUR PRODUCT TODAY FOR FASTER SERVICE & PRODUCT UPDATES

Please visit:
https://realtruck.com/warranty-registration/
or scan the QR Code

SCAN ME

Product Registration Benefits:

• Ensure we have your purchase receipt and product info in our system which is required for warranty.

• Faster and easier access to customer service and tech support in the unlikely event you need warranty or product support.

• Registration helps us keep you up to date on product information and offers.

To view other RealTruck products that may be offered for your vehicle.

Please visit: www.realtruck.com

REALTRUCK AMP RESEARCH Power Step

Congratulations on your purchase of the genuine RealTruck / AMP Research PowerStep!
Here's what you should know...

POWER-DEPLOYABLE RUNNING BOARDS OPERATION: RealTruck / AMP Research PowerStep running boards automatically move when the doors are opened to assist entering and exiting the vehicle.

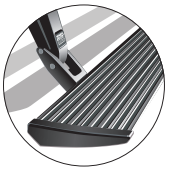

Automatic power deploy:
The running boards will extend down and out when the doors are opened.

Automatic power stow:
The running boards will return to the stowed position when the doors are closed. There will be a 2-second delay before the running boards move to the stowed position.

Automatic stop:
If an object is in the way of the moving running board, the running board will automatically stop. To reset, clear any obstruction, then simply open and close the door to resume normal operation.

Manually set in the deployed (OUT) position for access to the roof:
The running boards can be manually set in the deployed position by firmly holding the step down with your foot while at the same time closing the door. To resume normal operation, open and close the door.

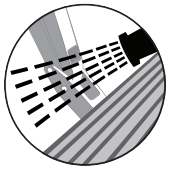

Maintenance: In adverse conditions, debris such as mud, dirt, and salt may become trapped in the running board mechanism, possibly leading to unwanted noise. If this occurs, manually set the running boards to the deployed position and flush the front and rear hinge arms with a high-pressure car wash wand. Avoid spraying the motors directly. After washing, apply silicone spray lubricant to the hinge pivot pins. Do not apply silicone, wax or protectants like Armor All® to the running board stepping surface.

Caution! Keep hands away when the running board is in motion.

5-YEAR LIMITED WARRANTY

RealTruck / AMP RESEARCH warrants this product to be free from defects in material and workmanship for FIVE (5) YEARS FROM DATE OF PURCHASE, provided there has been normal use and proper maintenance. This warranty applies to the original purchaser only. All remedies under this warranty are limited to the repair replacement of the product itself, or the repair or replacement of any component part thereof, found by the factory to be defective within the time period specified. The decision to repair or replace is wholly within the discretion of the manufacturer.

This warranty specifically excludes labor. If you have a warranty claim, first you must call our factory at the number below for instructions. You must retain proof of purchase and submit a copy with any items returned for warranty work. Upon completion of warranty work, if any, we will return the repaired or replaced item or items to you freight prepaid. Damage to our products caused by accidents, fire, vandalism, negligence, misinstallation, misuse, acts by nature or by defective parts not manufactured by us, is not covered under this warranty.

ANY IMPLIED WARRANTIES OF MERCHANTABILITY AND/OR FITNESS FOR A PARTICULAR PURPOSE CREATED HEREBY ARE LIMITED IN DURATION TO THE SAME DURATION AND SCOPE AS THE EXPRESS WRITTEN WARRANTY. OUR COMPANY SHALL NOT BE LIABLE FOR ANY INCIDENTAL OR CONSEQUENTIAL DAMAGE.

Some states do not allow limitations on how long an implied warranty lasts, or the exclusion or limitation of incidental or consequential damages, so the above limitations or exclusions may not apply to you. This warranty gives you specific legal rights, and you may also have other rights that vary from state to state.

FOR WARRANTY ISSUES WITH THIS PRODUCT PLEASE CALL REALTRUCK TECH SUPPORT 1-888-983-2204

WARNING

Be sure to read and precisely follow the provided instructions when installing this product. Failure to do so could place the vehicle occupants in a potentially dangerous situation. After installing or reinstalling, re-check to insure that the product is properly installed.

The material that your product is made from can be recycled. Please also consider recycling the packaging that your product came in.