PowerStep Vision

APPLICATION			AMP Part #
Ram 1500	Crew Cab	2025	96364-01A

INSTALLATION GUIDE

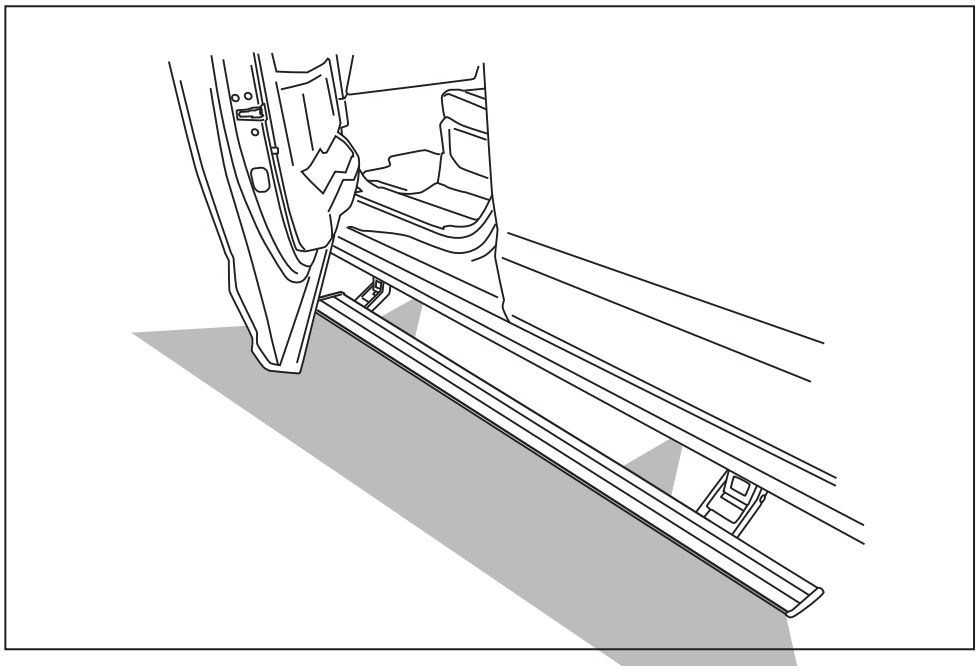

INSTALLATION TIME
3-5 Hours
Professional installation recommended

SKILL LEVEL
1 2 3 4
4= Experienced

TOOLS REQUIRED
- ❑ Safety goggles
- ❑ Measuring tape
- ❑ 10 mm socket
- ❑ 13 mm socket
- ❑ 1/2” socket
- ❑ Ratchet wrench and extension
- ❑ Wire crimpers
- ❑ Wire stripper / cutter
- ❑ 3/16” hex key wrench (allen wrench)
- ❑ 4mm hex key wrench (allen wrench)
- ❑ Electrical tape
- ❑ Weather proof caulking (silicone sealer)
- ❑ Silicone spray

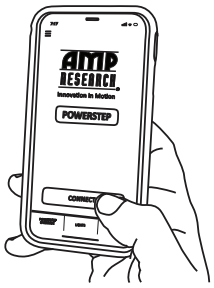

SMART SERIES APP: Download App to your phone and unlock the latest features including override, light controls, and diagnostics.

SCAN ME

WARRANTY
5-Year Limited Warranty

REALTRUCK TECH SUPPORT 1-888-983-2204 (Press 2) Monday - Friday, 8:00 AM - 5:00 PM EST

Designed and manufactured by RealTruck AMP Research® • Made in Mexico
Patent Protected. Please see our product site for applicable patents. www.realtruck.com/b/amp-research/
© RealTruck Group, Inc., 2024 • Five-year limited warranty. • Professional installation is recommended.

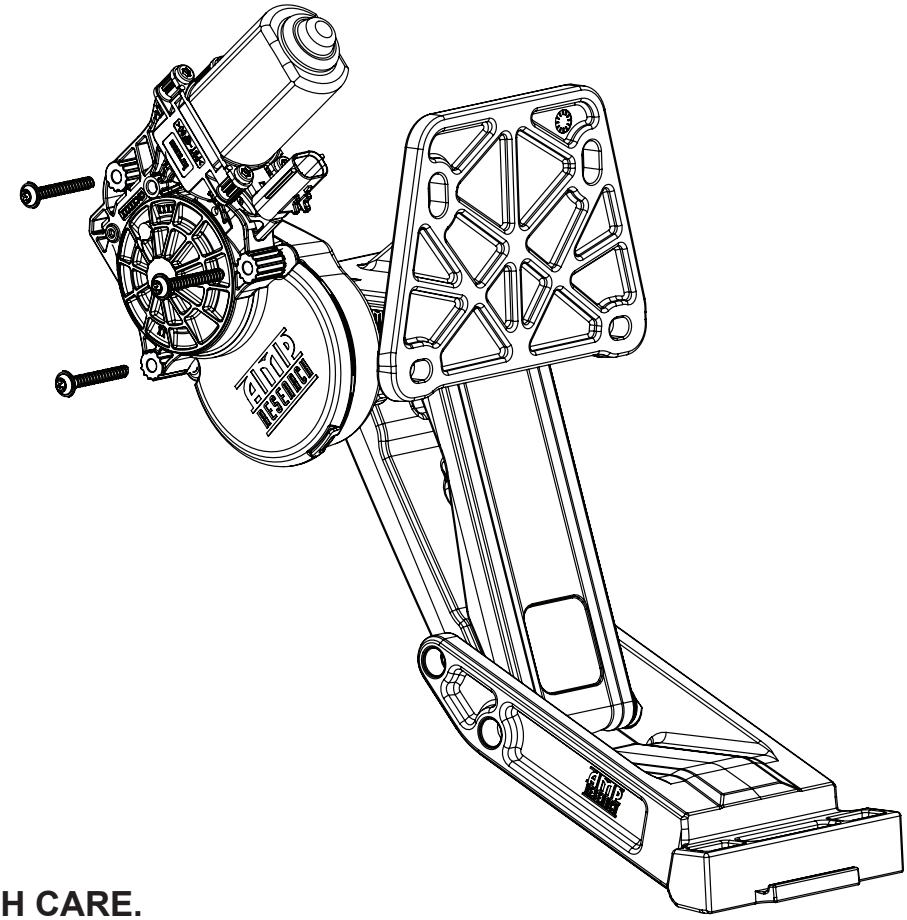

EXPLODED VIEW

- Motor linkage
- Motor
- Delta PT screws

CAUTION: HANDLE WITH CARE.

To ensure our customers receive all components with full integrity, we pack the motors separate from their linkage assemblies. This requires that the installer position and fasten the motor before continuing with the install. Please follow the instructions below and handle the assembly carefully.

CAUTION: Dropping the assembly or any excessive impact MAY cause damage to the motor.

Instructions:

1. Position the gear cover in place as shown if not already in place.

2. Seat motor into position on the three mounting bosses. This may require an adjustment of the gear by moving the swing arms.

3. After seating into place, fasten the motor with the three motor mount screws with 4mm Hex Head. Tighten screws to 36 in-lbs (4N-m). **Do not over torque.**

PARTS LIST AND HARDWARE IDENTIFICATION

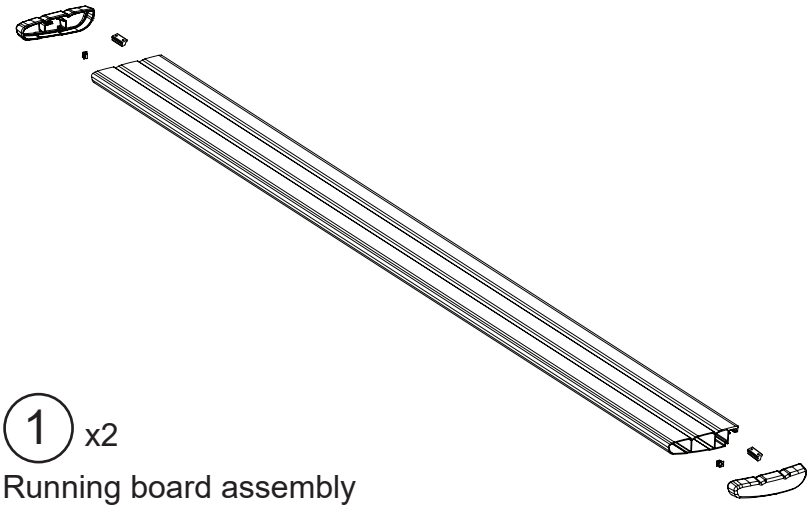

(A) End cap left (x1)
(B) End cap right (x1)
(C) T-nut insert (x2)
(D) (S) Style clips (x2)

1 x2
Running board assembly

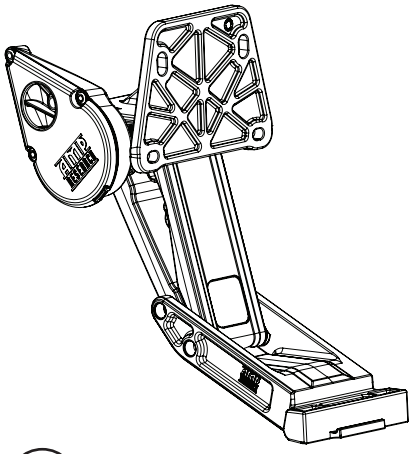

2
Motor Linkage assembly
Driver

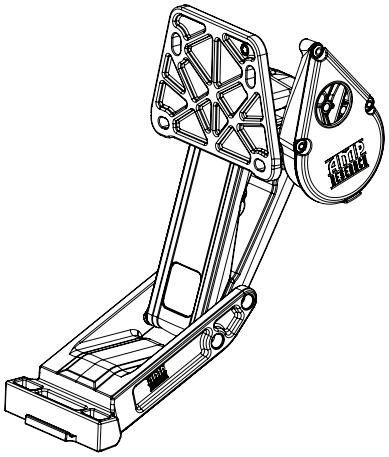

3
Motor Linkage assembly
Passenger

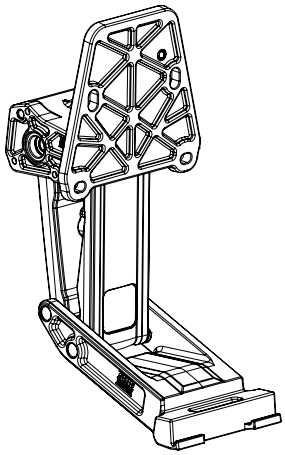

4 x2
Idler Linkage assembly

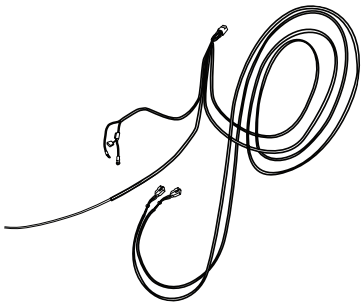

5
Wire harness

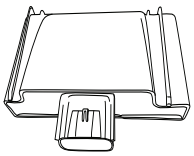

6
Controller SSA

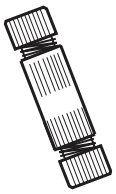

7
Posi-Lock™
Connector

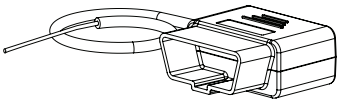

8
OBD II Plug

PARTS LIST AND HARDWARE IDENTIFICATION

9 x8
Socket Cap Screw

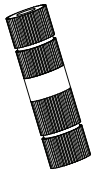

10 x2
Posi-Tap

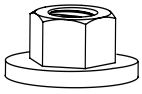

11 x12
Nut with Conical Washer

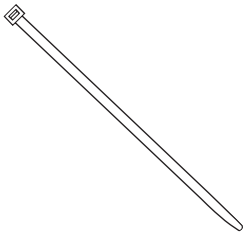

12 x20
Cable tie (7”)

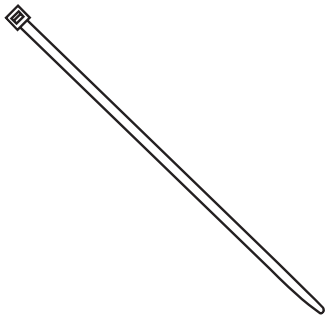

13 x4
Cable tie (11”)

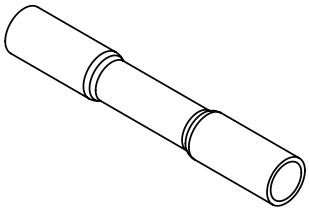

14 x8
Butt Connector

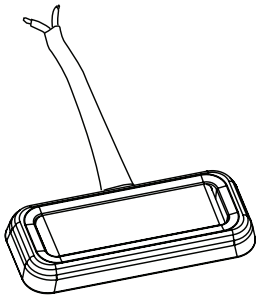

15 x4
LED Lamp

16 x4
Grommet

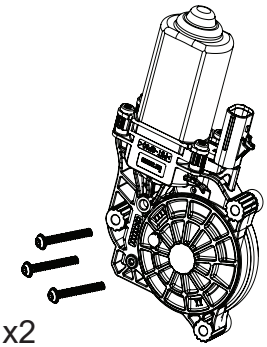

17 x2
Motor kit

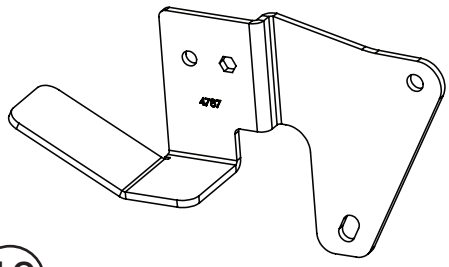

18
Harness Relocation Bracket

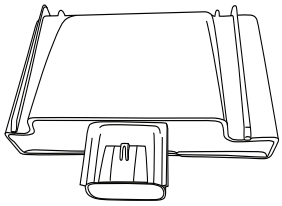

19
Controller RGB

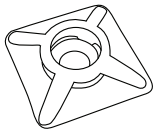

20 x4
Wire clip

21 x4
Clip

On driver's side of vehicle towards front of body, remove harness bracket with 10mm socket or wrench. Remove plug from bracket, and replace with supplied bracket (18) using two of the three factory screws as shown. Do not attach plug on to new bracket until motor is installed on to linkage (step 3).

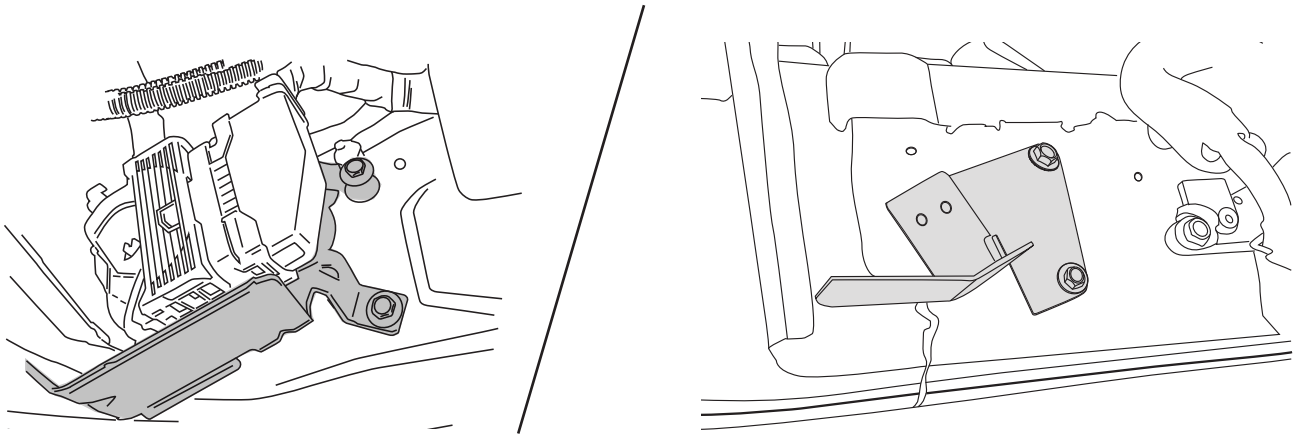

1

Locate mounting points. First and last set of studs on the inner sill. Motor linkage mounts towards the front of the truck and Idler towards the rear. Driver side shown below.

Note: Studs may have excess paint buildup. We recommend using a wire wheel or thread repairing dies to clean excess paint buildup.

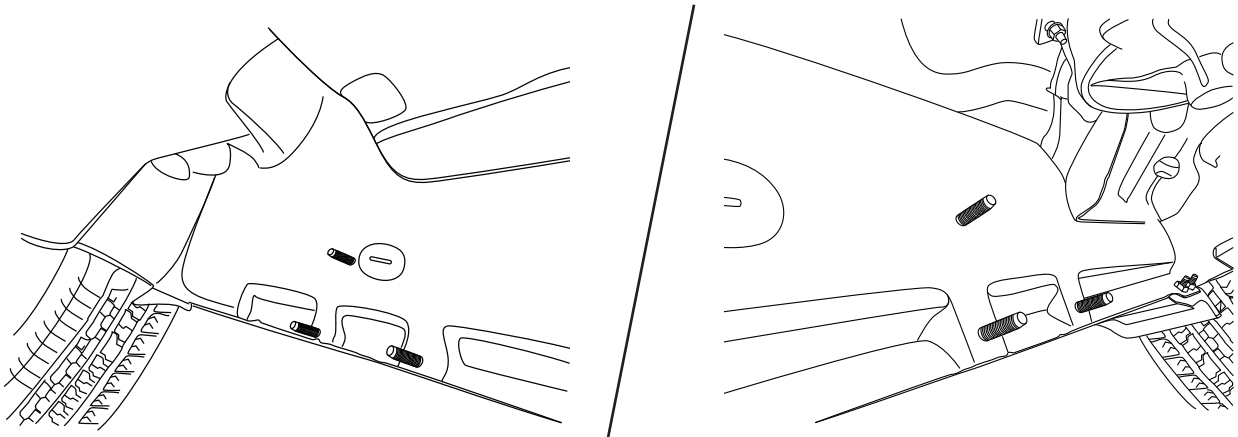

2

Attach motor to linkage. See page 2 for torque specs. Driver side motor orientation shown.

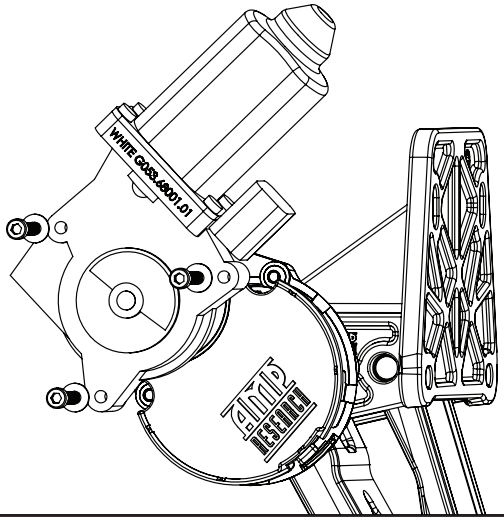

3

Mount drive and Idler linkage assemblies using supplied conical washer nuts (11) use a 13mm socket or wrench to tighten. Repeat for passenger side. Make sure linkages sit square, fully resting on studs before tightening. Torque to 16ft-lbs (22Nm).

Note: On Drive Linkage, install nut closest to gear case first for ease of installation

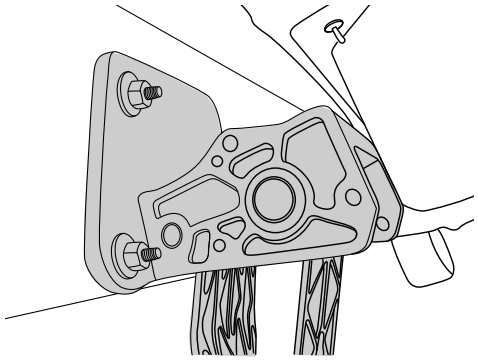

Rear Idler Linkage

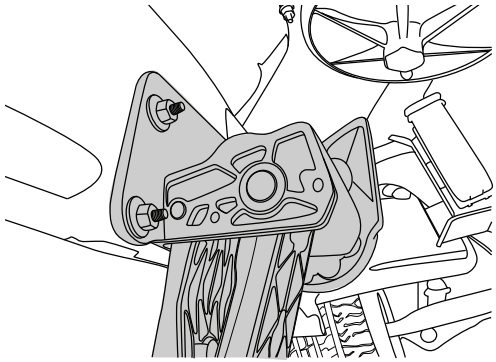

Front Driver Linkage

4

Using a 3/16” Allen install running board to linkages. Slide the front mounting T-nut into position, place the board(1) about 7 1/2 inches from the front edge of the front door. Use fasteners(9) to attach boards, finger tighten only. Align the rear T-nut and bolt it to the rear linkage. Then tighten all 4 fasteners to 10 ft-lbs.

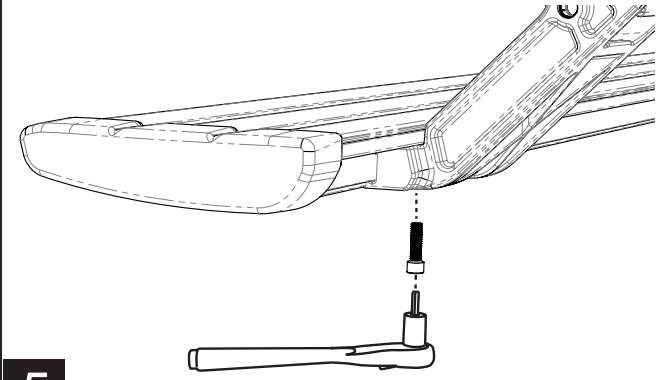

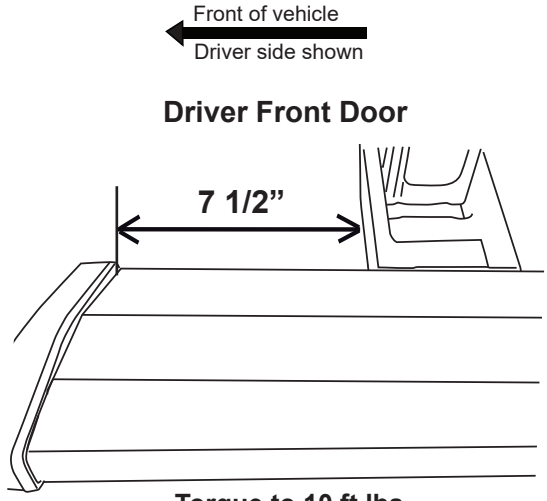

Torque to 10 ft.lbs.

5

Attach wire harness to controller (make sure connector locking tabs fully engage). Mount controllers (6 & 19) with the four 11” cable ties (13) to factory conduit, just rearward of battery.

Remove fuses from Power Step Wire Harness.

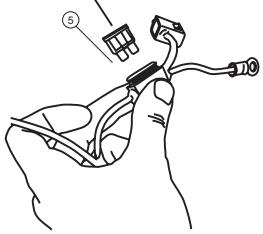

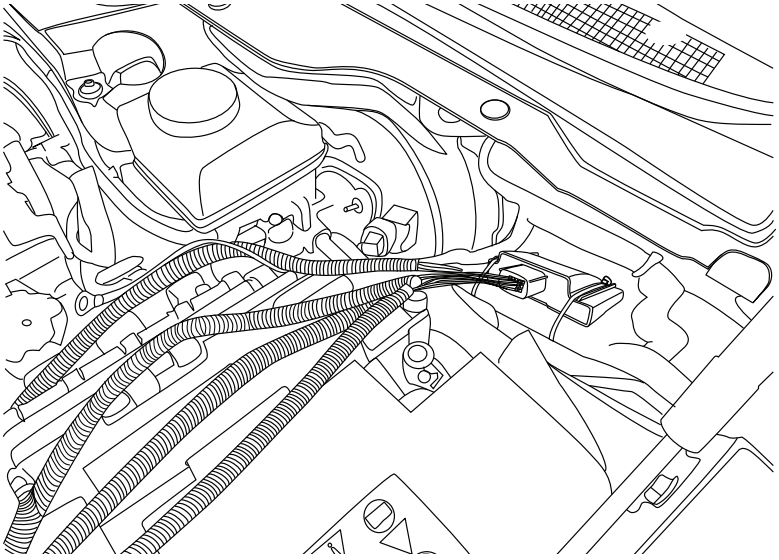

6

Connect red and black power leads to battery. Red lead goes to positive.

Secure with cable ties(12).

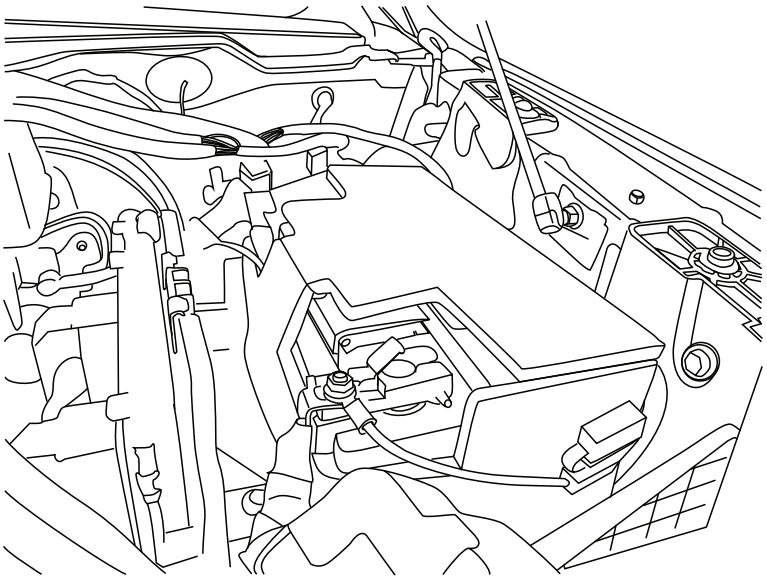

7

Route shorter leg of harness down Driver-side wheel well and longer leg of harness across firewall and down along passenger side wheel well. Attach wire harness with supplied 7” cable ties (12).

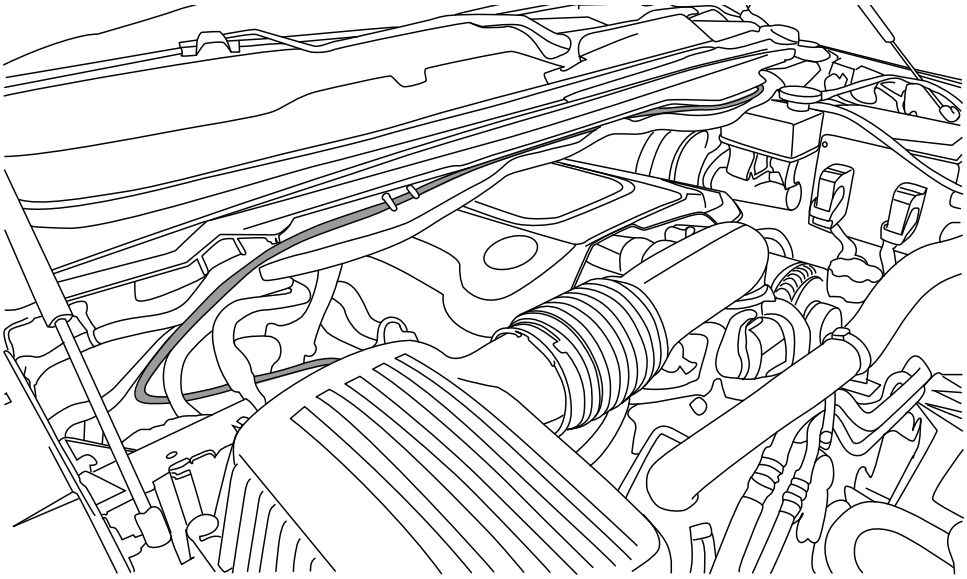

8

Locate the rubber boot to the left of the steering column. Poke hole to fish trigger wires thru.

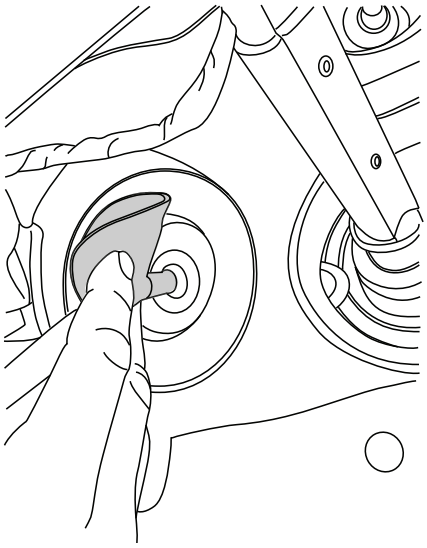

9

Plug OBD II (8) to port, tuck wires up and away to prevent snagging when entering and exiting the vehicle.

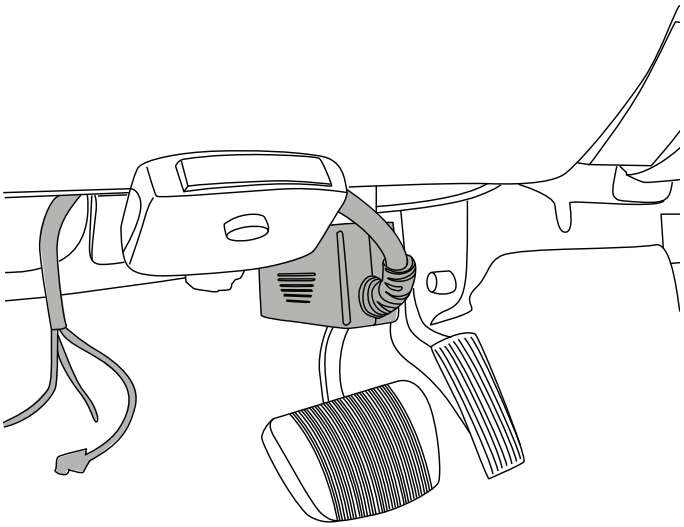

10

Locate the grey plug to the left of the steering column near the firewall area.

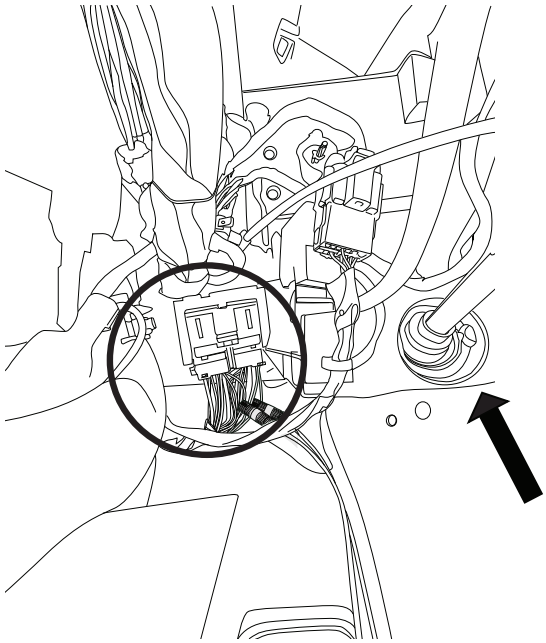

11

Locate the blue with white stripe wire, and the tan wire to the right end of the plug. Use supplied posi-taps (10) to connect the blue wire on the DSM to the Tan wire on the factory plug. Next, connect the white wire on the DSM to the Blue with white stripe on the factory plug.

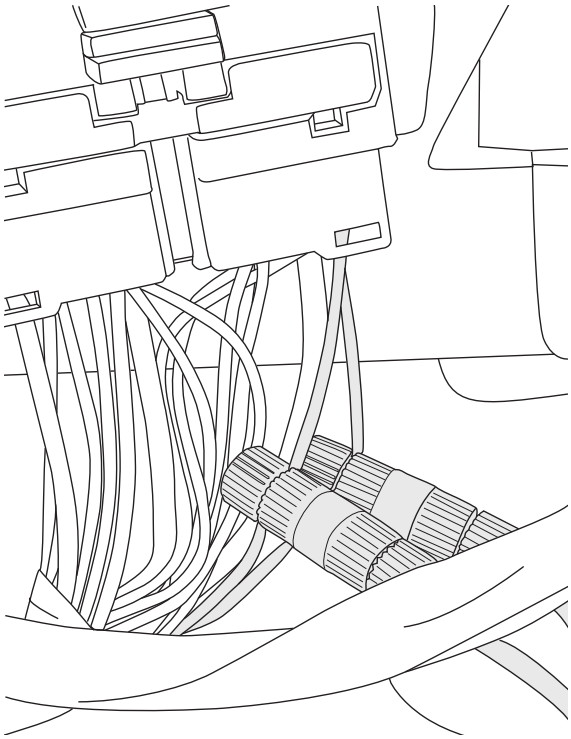

12

OBD II install: Use Supplied Posi Lock connector to attach the Plug and Play Module to the Harness. Attach matching colors on the harness to the wires on the module. Plug in module to OBD II port on the vehicle. Secure harness with supplied tie wraps.

Note: If the OBD II pass thru harness (76404-01A) was purchased see install sheet supplied in packaging. The pass through harness allows for an open port for other accessories. See next page for a brief description.

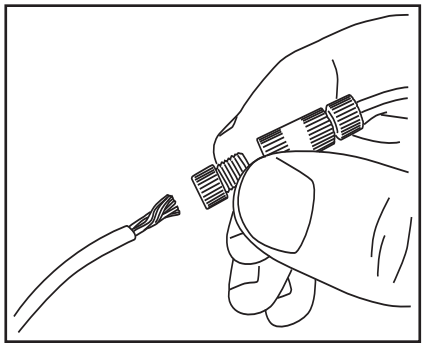

OBD II Connector located below steering column.

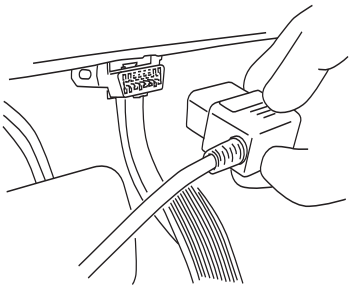

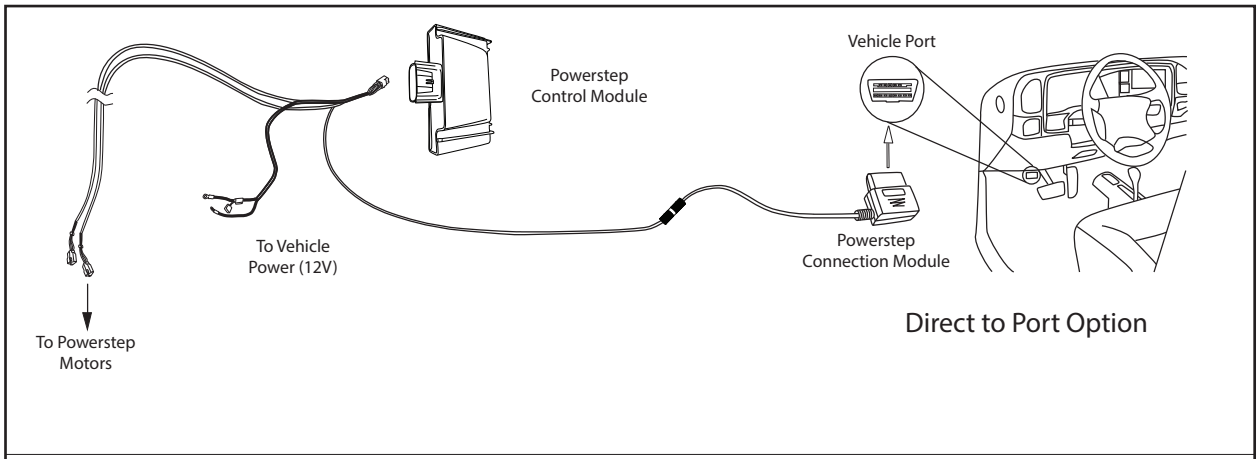

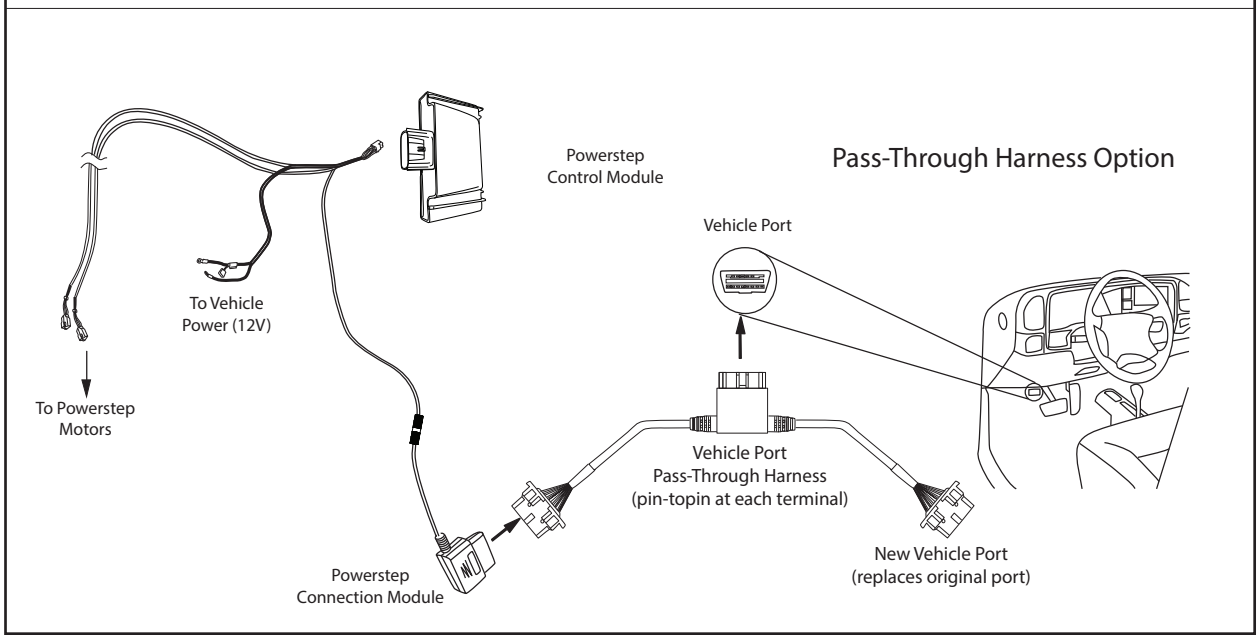

On driver side, run Wire Harness leg down and along underside of the vehicle floor and frame to front Drive Linkage. Connect harness to motor and secure harness with tie wraps. Route remainder of wire harness towards rear linkage assembly for LED lights.

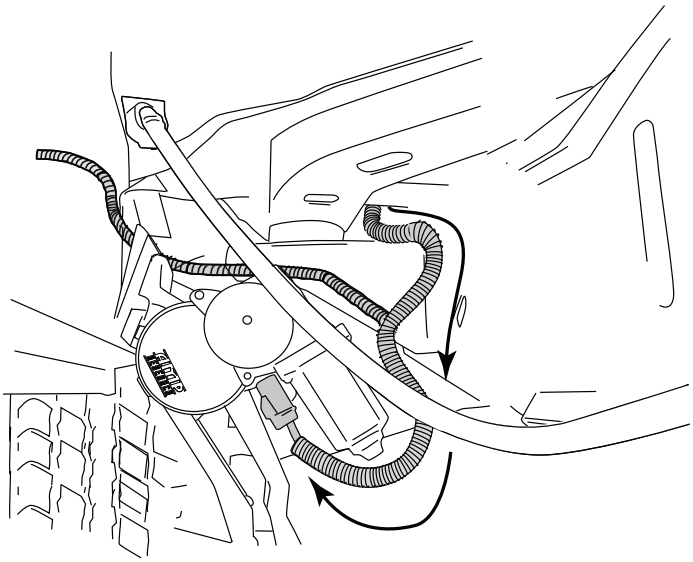

14

On Passenger Side, run Wire Harness leg down and along underside of the vehicle floor and frame to front Drive Linkage. Connect harness to motor and secure harness with tie wraps. Route remainder of wire harness towards rear linkage assembly for LED lights.

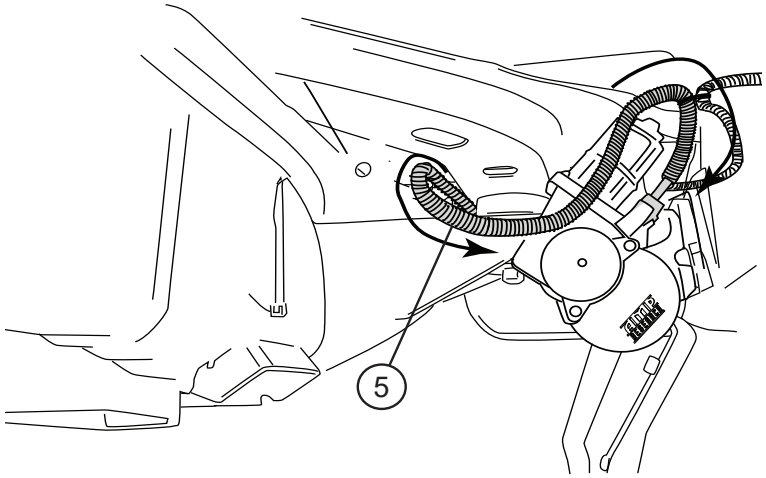

15

On each side of the vehicle measure approx. 7” back from front linkage and 8” forward of the rear linkage. Pre drill using an 1/8” drill bit and final drill to 9/32” thru pinch weld at marked locations. Insert grommet into drilled holes. Insert lamp wires through the grommets. (Silicon lube will help wires slip through grommets.) Affix lamp to rocker panel surface. Make sure lamp is affixed to a flat, clean surface.

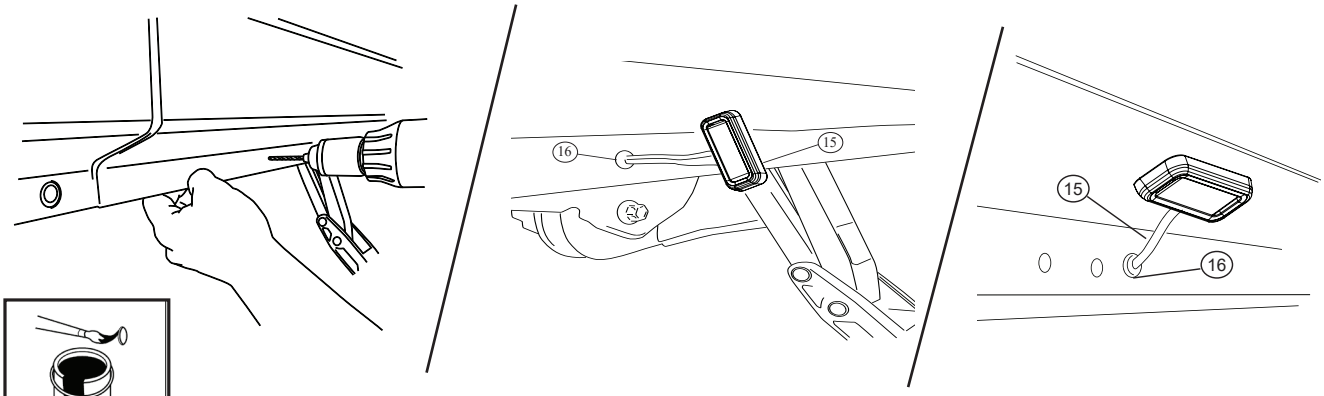

16

Route RGB wire to front linkage as shown. Use provided Extrusion wire clips (21) to hold wire in place.

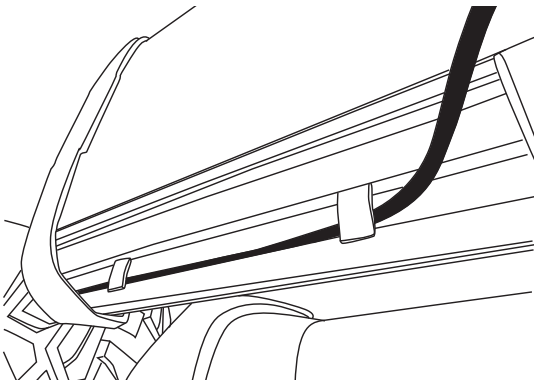

17

Clean surface with alcohol and use provided adhesive backed wire clips (20) to hold wire on lower mount.

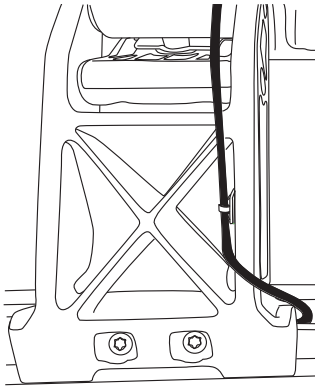

18

Clean surface with alcohol and use provided adhesive backed wire clips (20) to hold wire on inner linkage as shown.

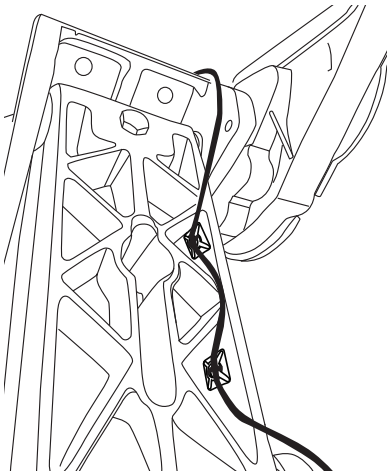

19

Connect RGB light plug into main harness of powerstep. Secure all remaining RGB wiring with supplied Zip ties (14). Cycle steps to ensure wiring is clear from any moving components of the powerstep.

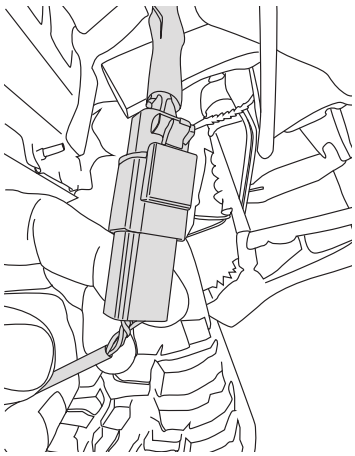

20

Using supplied butt connectors (14) connect the lamp wires. Red to Red, Black to Black. Once Crimped use heat gun to shrink tube. Close and wrap conduit with electrical tape. Secure all loose wires with cable ties. Pull lamp wires upward to avoid any wire snagging.

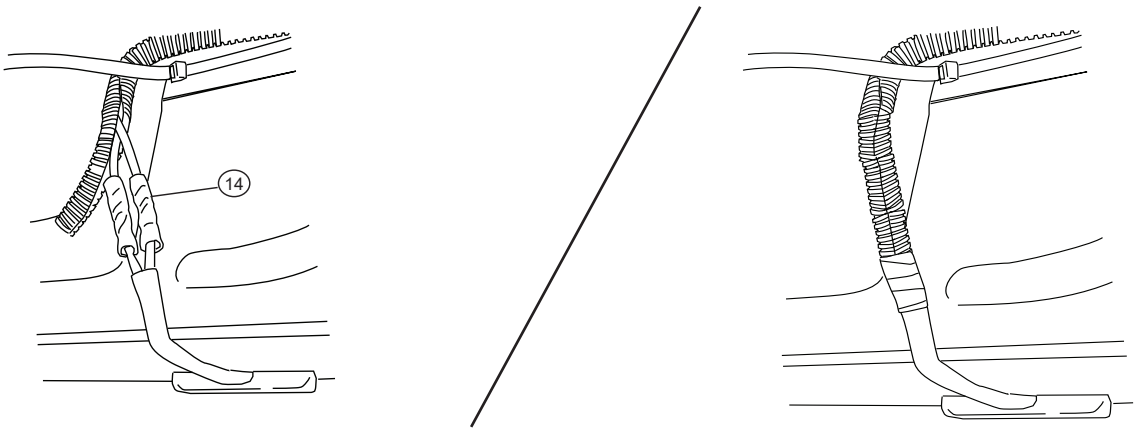

21

Reinstall Fuses and check that all doors activate the Power Step and the LED Lights work when doors open and close. Reinstall any remaining trim panels. **NOTE: Verify front linkage clearance at Frame mounted Vibration Dampener. If linkage contacts Dampener in stowed position loosen bolt at pivot point and rotate up to provide at least 1/2" clearance.**

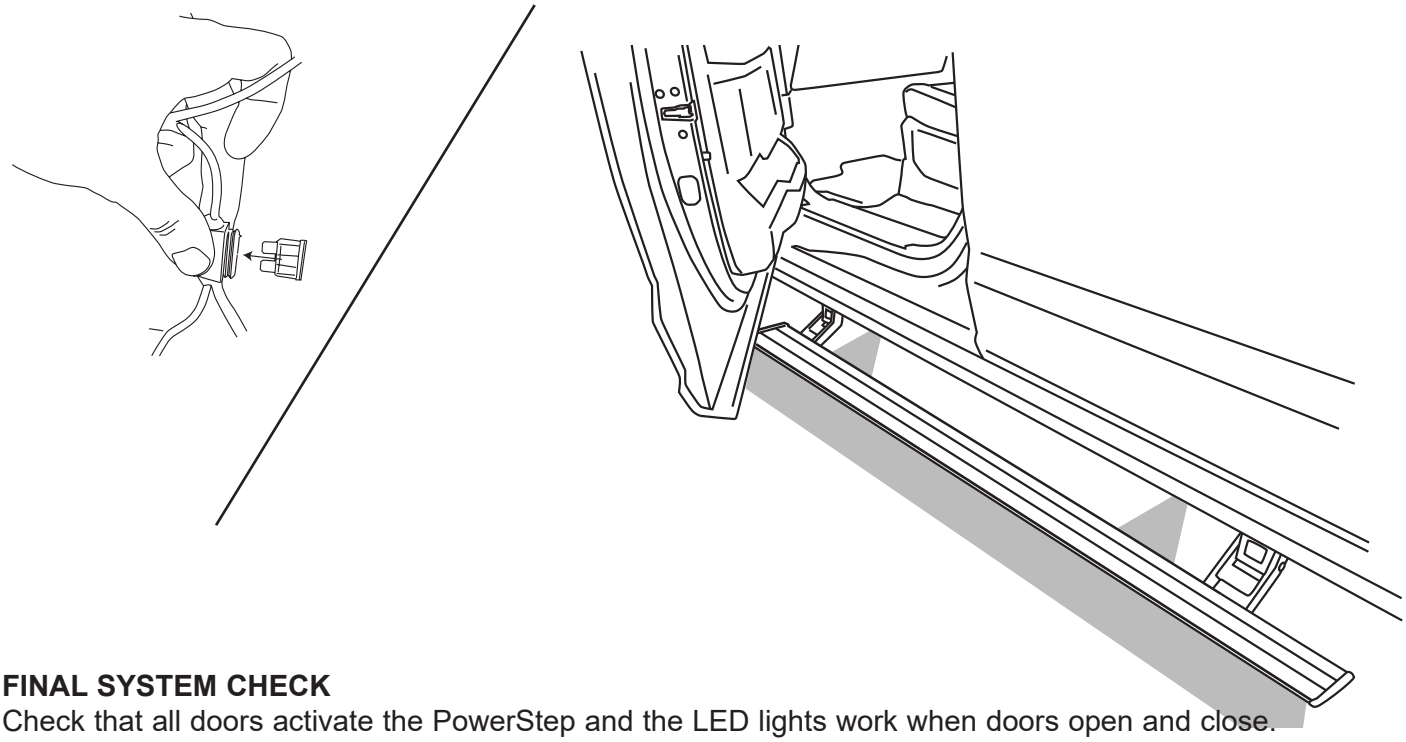

FINAL SYSTEM CHECK

Check that all doors activate the PowerStep and the LED lights work when doors open and close.

NORMAL OPERATION: When the doors open, PowerStep automatically deploys from under the vehicle. When the doors are closed, PowerStep will automatically return to the stowed/retracted position. ***Note that there is a 2-second delay before the PowerStep returns to the stowed/retracted position.***

CORRECT OPERATION OF LIGHTS: All four lamps will illuminate upon opening any door of vehicle. Lamps will stay on until restowing of both Power Steps or until 5 minutes has expired with the doors open. When the lights timeout after 5 minutes, they can be reillumintated by closing and opening any door of vehicle.

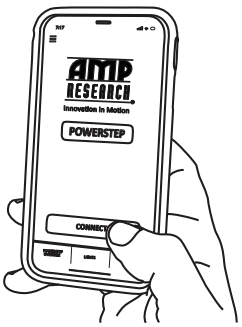

Download our Smart Series App on your Android phone or iPhone by scanning the QR code below and follow the instructions. Or visit your app store and search "AMP Research Powerstep" to download app.

SCAN ME

AMERICAN DESIGNED & ENGINEERED

Thank you for your recent RealTruck purchase.

REGISTER YOUR PRODUCT TODAY FOR FASTER SERVICE & PRODUCT UPDATES

Please visit:
https://realtruck.com/warranty-registration/
or scan the QR Code

SCAN ME

Product Registration Benefits:

• Ensure we have your purchase receipt and product info in our system which is required for warranty.

• Faster and easier access to customer service and tech support in the unlikely event you need warranty or product support.

• Registration helps us keep you up to date on product information and offers.

To view other RealTruck products that may be offered for your vehicle.

Please visit: www.realtruck.com

REALTRUCK AMP RESEARCH Power Step

Congratulations on your purchase of the genuine RealTruck / AMP Research PowerStep!
Here's what you should know...

POWER-DEPLOYABLE RUNNING BOARDS OPERATION: RealTruck / AMP Research PowerStep running boards automatically move when the doors are opened to assist entering and exiting the vehicle.

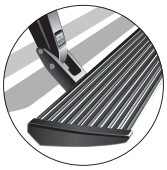

Automatic power deploy:
The running boards will extend down and out when the doors are opened.

Automatic power stow:
The running boards will return to the stowed position when the doors are closed. There will be a 2-second delay before the running boards move to the stowed position.

Automatic stop:
If an object is in the way of the moving running board, the running board will automatically stop. To reset, clear any obstruction, then simply open and close the door to resume normal operation.

Manually set in the deployed (OUT) position for access to the roof:
The running boards can be manually set in the deployed position by firmly holding the step down with your foot while at the same time closing the door. To resume normal operation, open and close the door.

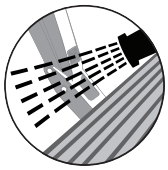

Maintenance: In adverse conditions, debris such as mud, dirt, and salt may become trapped in the running board mechanism, possibly leading to unwanted noise. If this occurs, manually set the running boards to the deployed position and flush the front and rear hinge arms with a high-pressure car wash wand. Avoid spraying the motors directly. After washing, apply silicone spray lubricant to the hinge pivot pins. Do not apply silicone, wax or protectants like Armor All® to the running board stepping surface.

Caution! Keep hands away when the running board is in motion.

5-YEAR LIMITED WARRANTY

RealTruck / AMP RESEARCH warrants this product to be free from defects in material and workmanship for FIVE (5) YEARS FROM DATE OF PURCHASE, provided there has been normal use and proper maintenance. This warranty applies to the original purchaser only. All remedies under this warranty are limited to the repair replacement of the product itself, or the repair or replacement of any component part thereof, found by the factory to be defective within the time period specified. The decision to repair or replace is wholly within the discretion of the manufacturer.

This warranty specifically excludes labor. If you have a warranty claim, first you must call our factory at the number below for instructions. You must retain proof of purchase and submit a copy with any items returned for warranty work. Upon completion of warranty work, if any, we will return the repaired or replaced item or items to you freight prepaid. Damage to our products caused by accidents, fire, vandalism, negligence, misinstallation, misuse, acts by nature or by defective parts not manufactured by us, is not covered under this warranty.

ANY IMPLIED WARRANTIES OF MERCHANTABILITY AND/OR FITNESS FOR A PARTICULAR PURPOSE CREATED HEREBY ARE LIMITED IN DURATION TO THE SAME DURATION AND SCOPE AS THE EXPRESS WRITTEN WARRANTY. OUR COMPANY SHALL NOT BE LIABLE FOR ANY INCIDENTAL OR CONSEQUENTIAL DAMAGE.

Some states do not allow limitations on how long an implied warranty lasts, or the exclusion or limitation of incidental or consequential damages, so the above limitations or exclusions may not apply to you. This warranty gives you specific legal rights, and you may also have other rights that vary from state to state.

FOR WARRANTY ISSUES WITH THIS PRODUCT PLEASE CALL REALTRUCK TECH SUPPORT 1-888-983-2204

WARNING

Be sure to read and precisely follow the provided instructions when installing this product. Failure to do so could place the vehicle occupants in a potentially dangerous situation. After installing or reinstalling, re-check to insure that the product is properly installed.

The material that your product is made from can be recycled. Please also consider recycling the packaging that your product came in.