Verify, and adjust if necessary, centering of Rack and Pinion before installing.

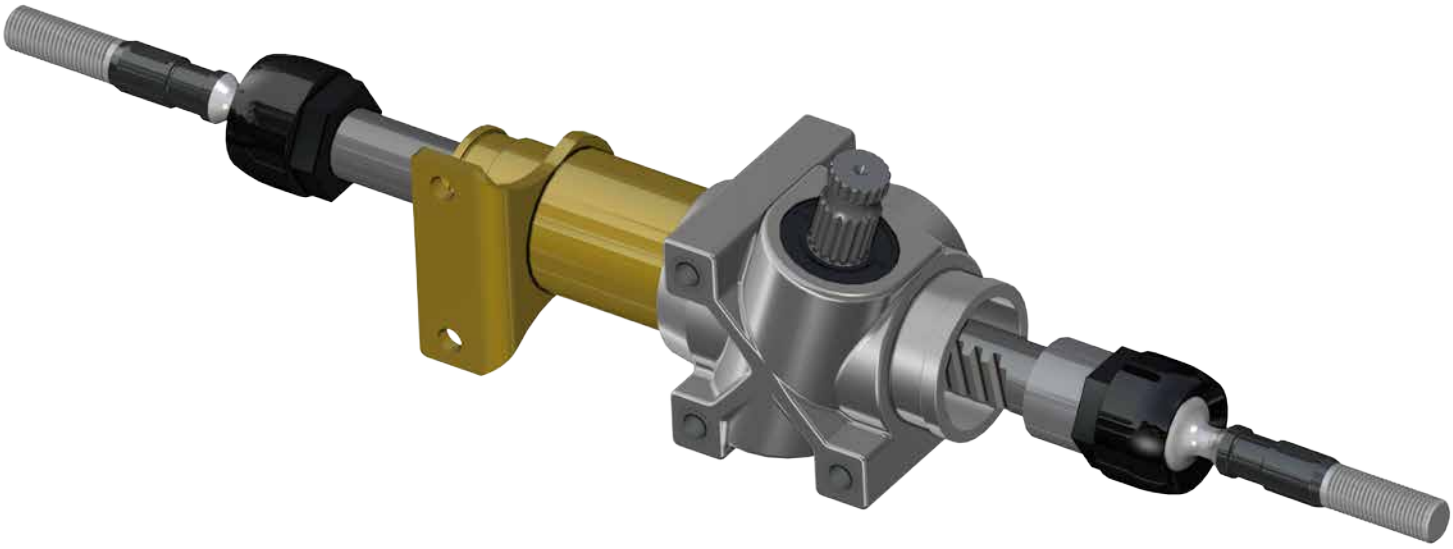

1. Measure distance from inside of Rack and Pinion to face of Tie Rod End.
2. Measure distance from face of Tie Rod End to housing face.
3. Adjust Rack and Pinion until measurements are equal.

- Mark center.

(illustrations on following page)

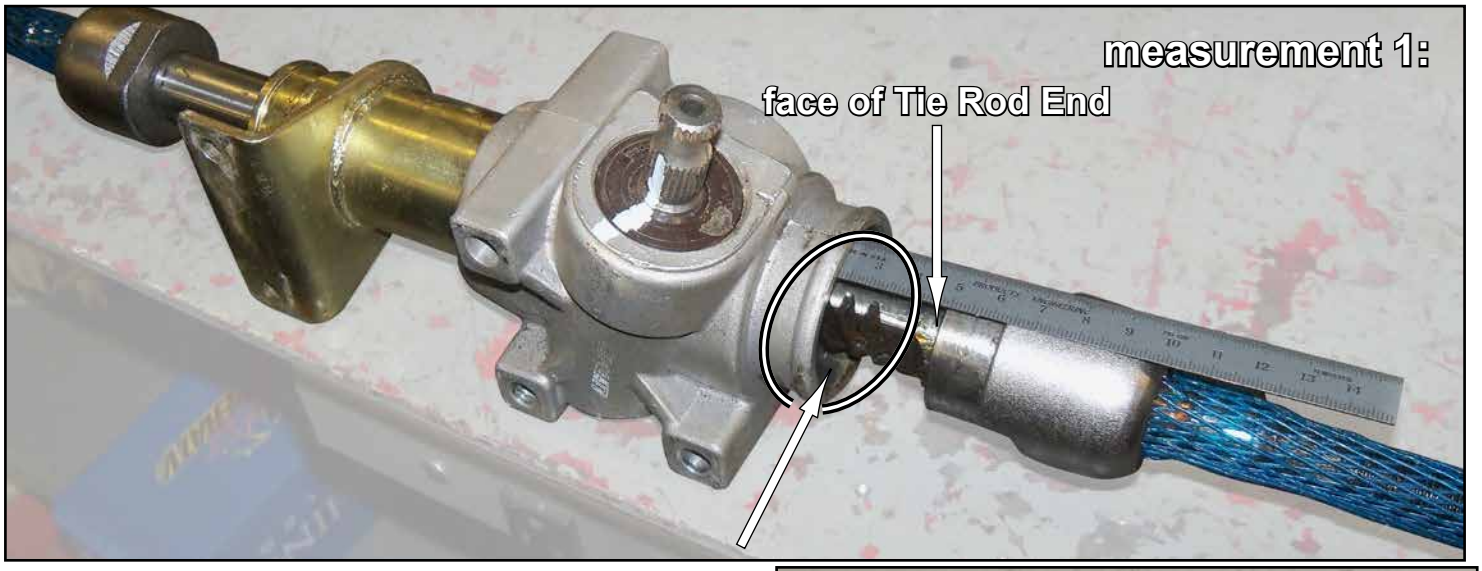
measurement 1:
face of Tie Rod End

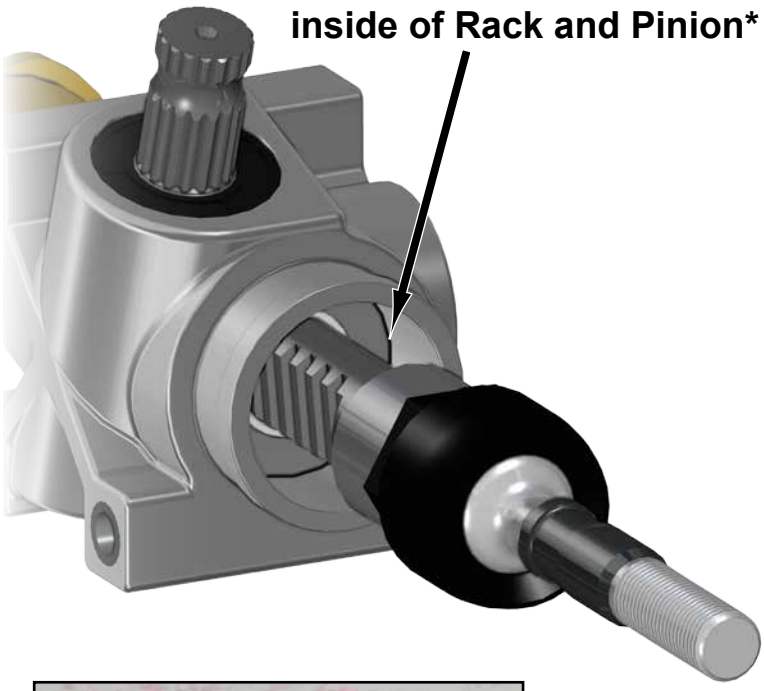
inside of Rack and Pinion*


*Some models will have only a slight recess.
Take measurement from recessed area.


mark center

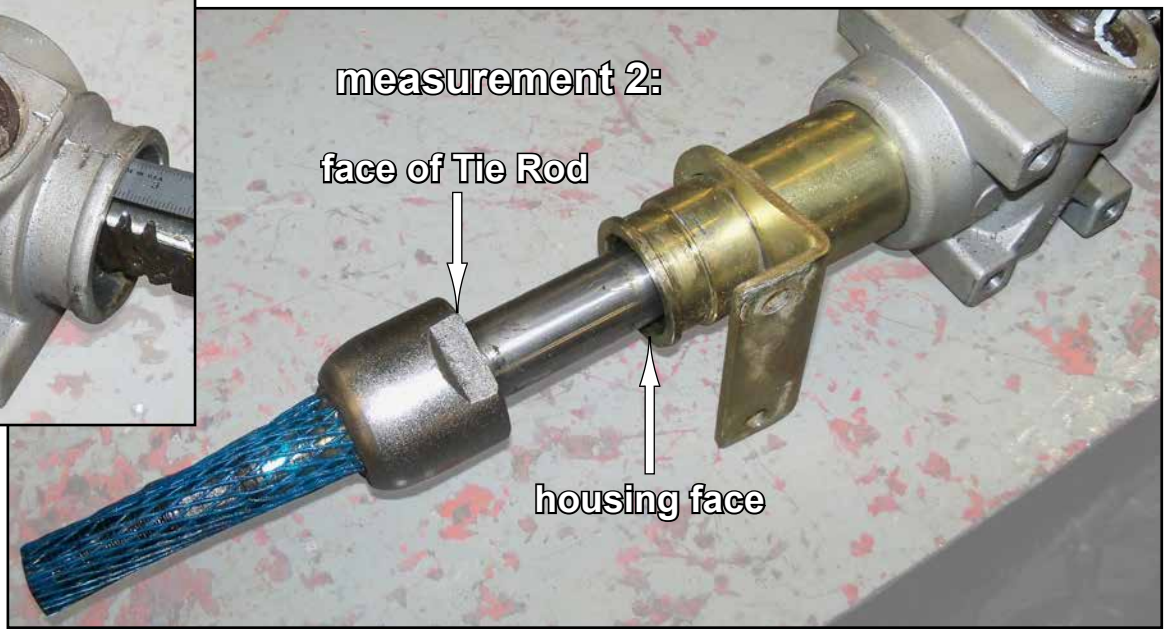
measurement 2:
face of Tie Rod
housing face

2753 Michigan Road • Madison, Indiana 47250 • 855-743-3427

INSTALLATION INSTRUCTIONS

Polaris Ranger Heavy Duty Rack and Pinion (XP 500/800)



Shaft x 2

Jam Nut x 2

End and Jam Nut x 2



Steering Stop Kit

Rack and Pinion

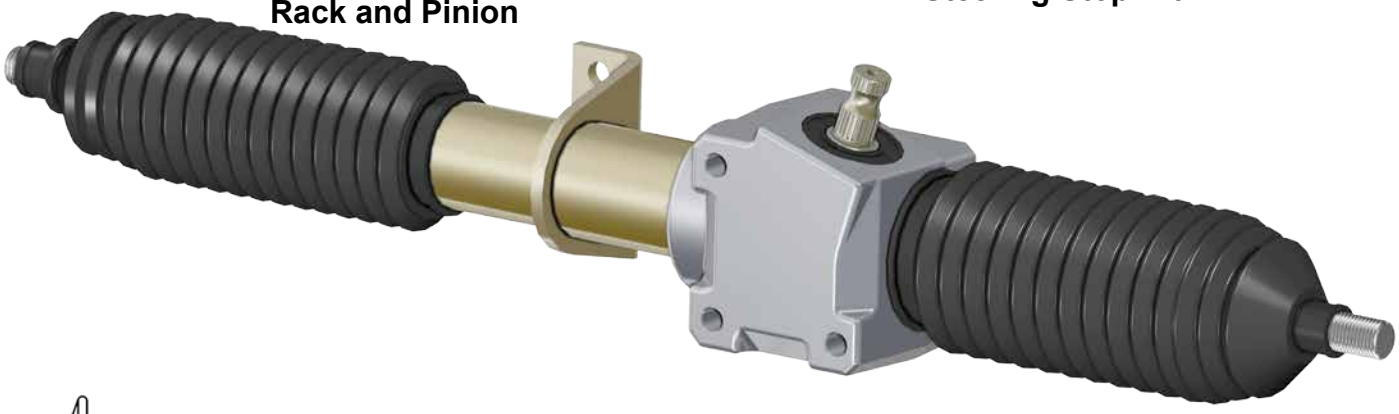

2x 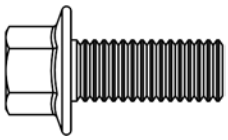 M8 x 20mm Lg. FHCS

3x 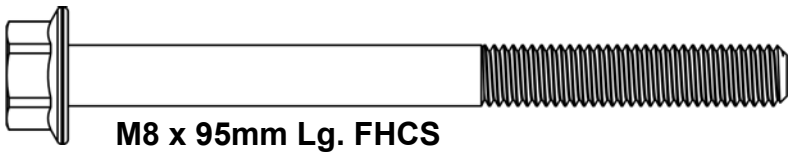

M8 x 95mm Lg. FHCS

5x  M8 Nylock Nut, Flange

Need help with your installation?

sales@superatv.com

www.superatv.com

1-855-743-3427

8:00am - 8:00pm EST M-Th
8:00am - 7:00pm EST Friday
9:00am - 2:00pm EST Saturday

Read instructions and view illustrations before beginning.

Thank You For Choosing

© 2015 SuperATV.com® All Rights Reserved.

Removal: *Keep all hardware and components removed from machine.*

1. Raise front of machine off ground, secure with jack stands and remove Wheels.
2. Remove Tie Rods and disconnect Steering Shaft from Rack and Pinion.
3. Remove Rack and Pinion.

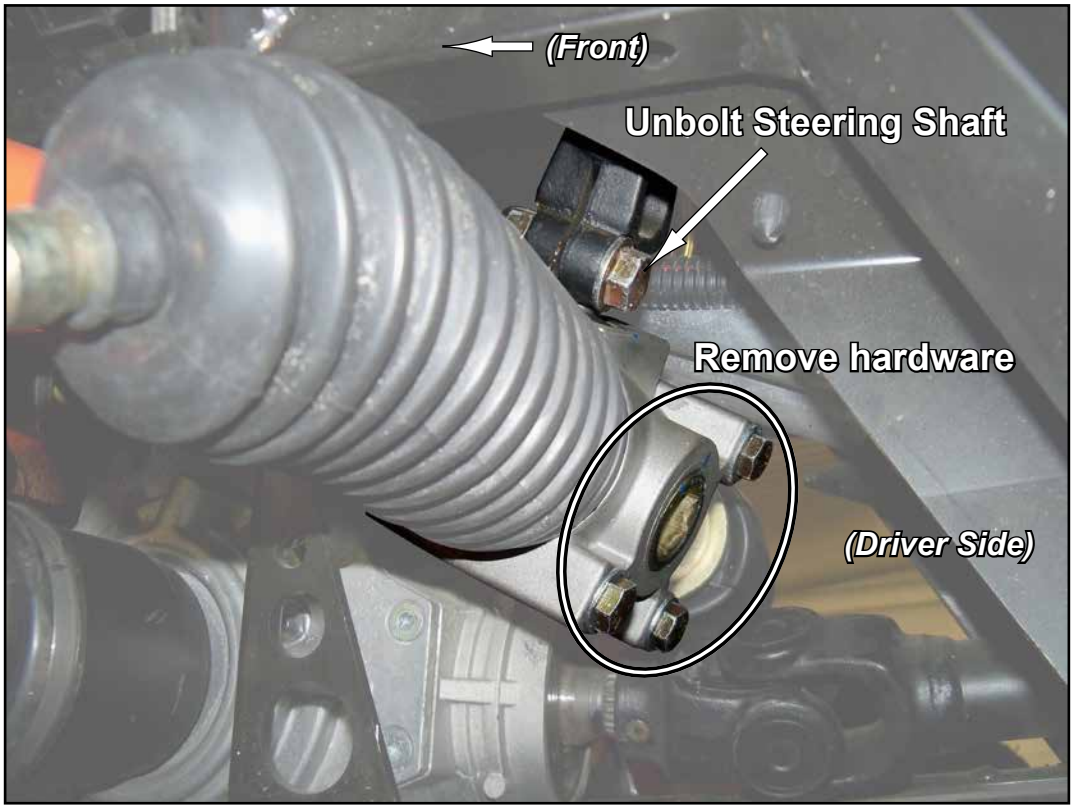

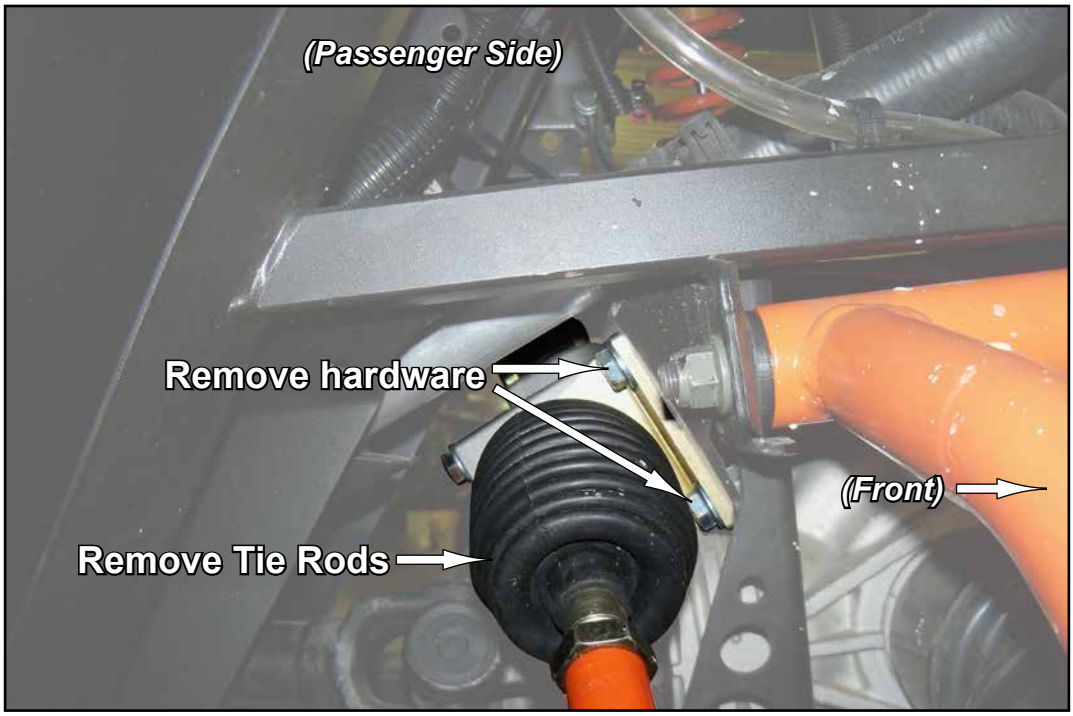

Using Steering Stop Kit will prevent over extension of Axles, when in reverse under hard throttle, by limiting steering range.

OPTIONAL STEERING STOP KIT



1. Remove Wire Ties and Boots from Rack and Pinion. See Fig. 1.
2. Install Steering Stop Bushings (A) onto Shafts of new Rack and Pinion.
3. Reinstall Boots and secure with Wire Ties.

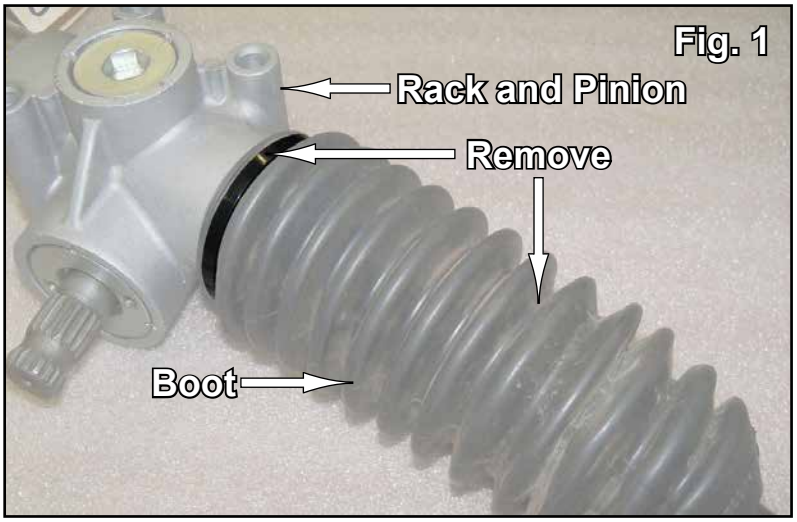

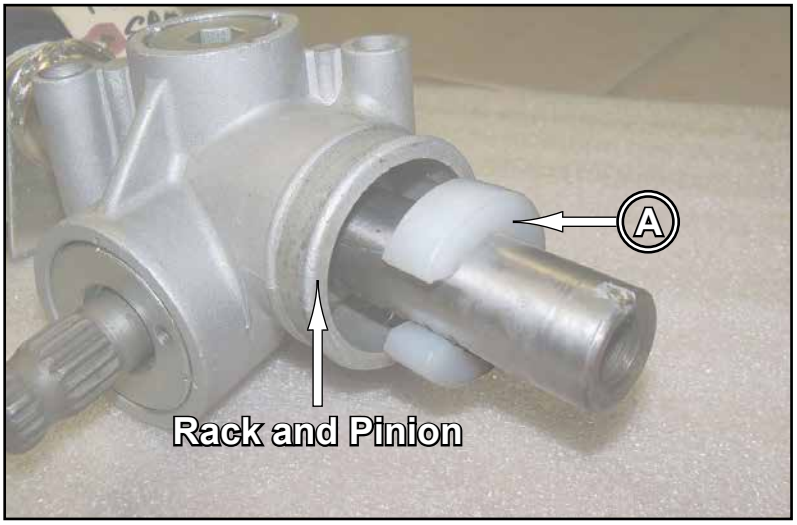

Rack and Pinion Installation: *Do not tighten hardware completely unless noted.*

1. Reinstall Steering Shaft to Rack and Pinion with stock hardware.
2. Install Rack and Pinion to machine with hardware shown. Tighten hardware completely.
3. Proceed to “Tie Rod Installation”.
4. Reinstall necessary components.

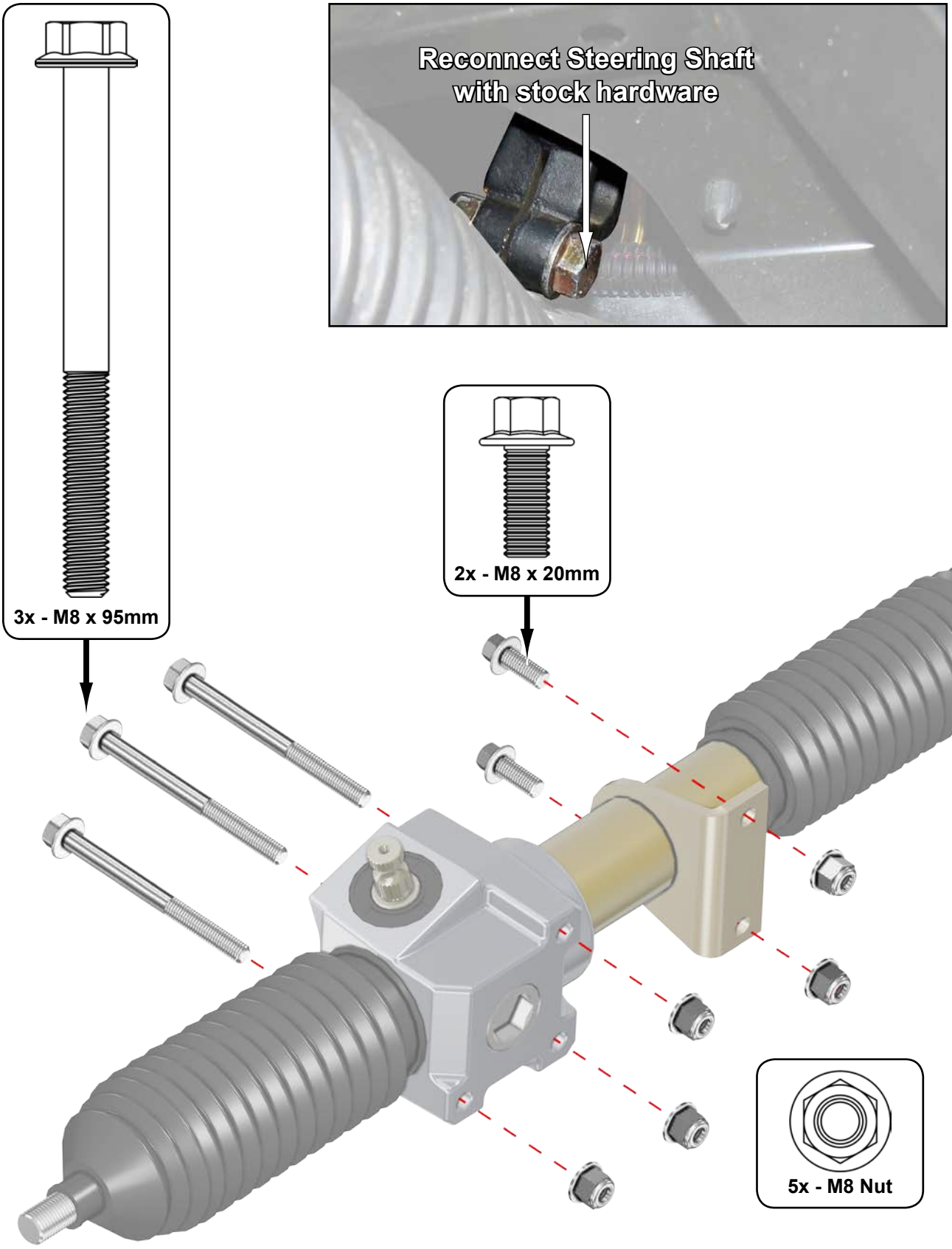

Tie Rod Installation:

- Install Tie Rod Shafts to Ball and Sockets on Rack and Pinion.
- Install Tie Rod Ends to Tie Rod Shafts.
- Secure Tie Rod Ends to same location as stock on Spindles with hardware shown.

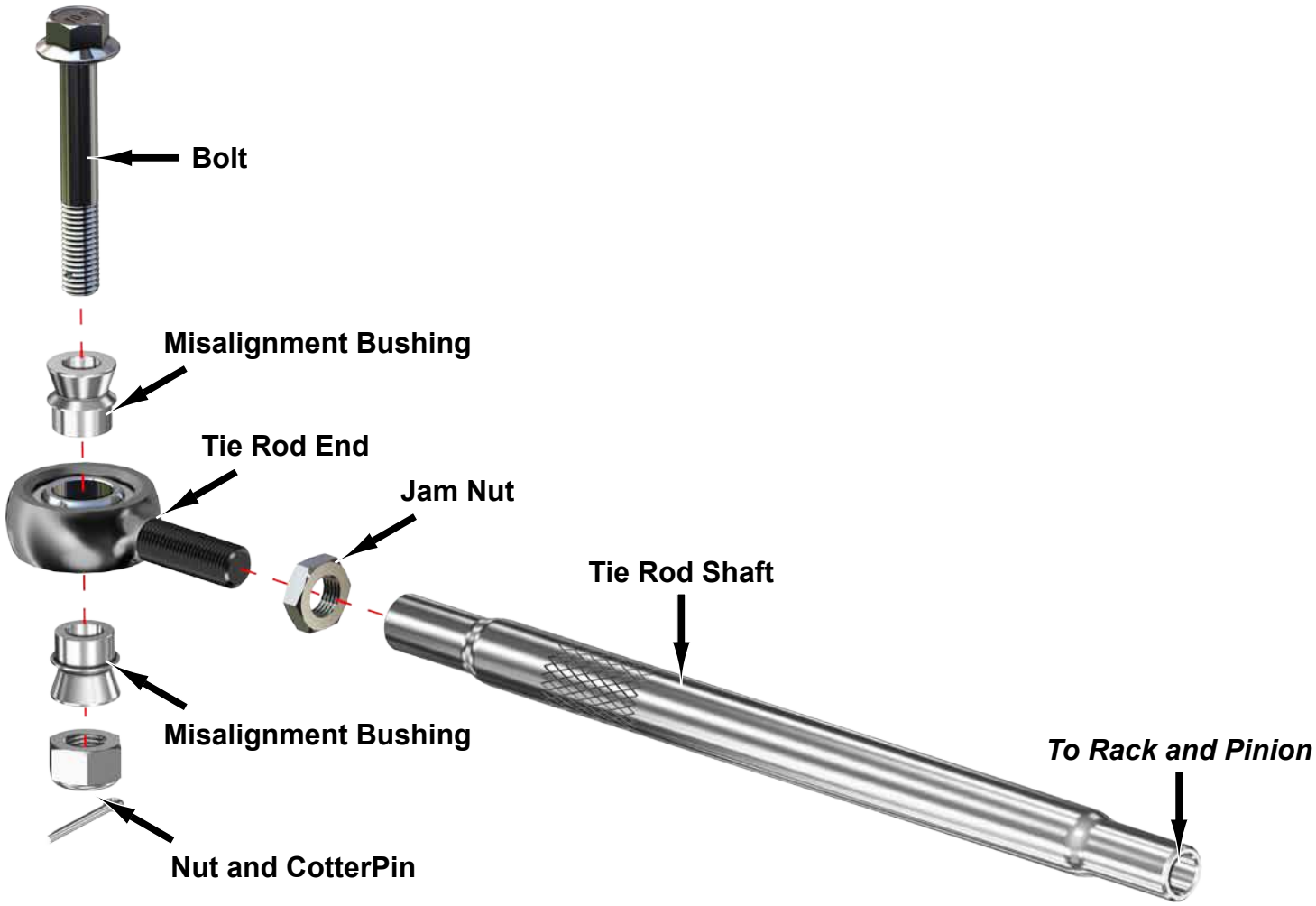

- Reinstall necessary components.
- Before initial ride, set toe-in of vehicle.
- After initial ride check to see that hardware remained tight.

Liability Statement

SuperATV's® products are designed to best fit user's ATV/UTV under stock conditions. Adding, modifying, or fabricating any factory or aftermarket parts will void any warranty provided by SuperATV® and is not recommended. SuperATV's® products could interfere with other aftermarket accessories. If user has aftermarket products on machine, contact SuperATV® to verify that they will work together.

Although SuperATV® has thousands of satisfied customers, user should be aware that installing lift kits, long travel, or suspension kits, tires, etc. will change the ride of machine and may increase maintenance and part wear. Operating any off-road machine while, or after, consuming alcohol and/or drugs increases risk of bodily harm or death. No warranty or representation is made as to this product's ability to protect user from severe injury or death. SuperATV® urges operators and occupants to wear a helmet and appropriate riding gear at all times.

By purchasing and installing SuperATV® products, user agrees that should damages occur, SuperATV® will not be held responsible for loss of time, use, labor fees, replacement parts, or freight charges. SuperATV®, nor any 3rd party, will not be held responsible for any direct, indirect, incidental, special, or consequential damages that result from any product purchased from SuperATV®. The total liability of seller to user for all damages, losses, and causes of action, if any, shall not exceed the total purchase price paid for the product that gave rise to the claim.

SuperATV® will warranty only parts provided by SuperATV®. Any damage or problems with OEM housings, bearings, seals, or other manufacturers' products will not be covered by SuperATV®. SuperATV® parts and products are not warrantied if item was not installed properly, misused, or modified.

Installing, adding, modifying, or fabricating any factory or aftermarket product to your ATV/UTV may violate certain local, state, and federal laws. Be advised that laws vary depending on town, city, county, state, etc. Use of certain products on public streets, roads, or highways may be in violation law. The Buyer is solely and exclusively legally and personally responsible for any violation of the law by the installation or use of the product. You must abide by all local, state, and federal laws, including but not limited to vehicle safety, traffic laws, and ordinances. It is your responsibility to know the laws and how they apply to you.

The Buyer is responsible to fully understand the capability and limitations of his/her vehicle according to manufacturer specifications, warnings and instructions and agrees to hold SuperATV® harmless from any damage resulting from failure to adhere to such specifications, warnings and/ or instructions. The Buyer is also responsible to obey all applicable federal, state, and local laws and ordinances when operating his/her vehicle while using this product, and the Buyer agrees to hold SuperATV® harmless from any violation thereof.