2753 Michigan Road • Madison, Indiana 47250 • 855-743-3427

INSTALLATION INSTRUCTIONS

2” Offset A-Arms:

for Can-Am Defender

A Press or Ball Joint tool is required to remove and install Ball Joints.

Item	Description
A	Upper Driver
B	Lower Driver
C	Upper Passenger
D	Lower Passenger
E*	Bump Stop x 2

Brake Line Clip and hardware



4 each

Straight Fitting



4 each



90° Fitting

E*







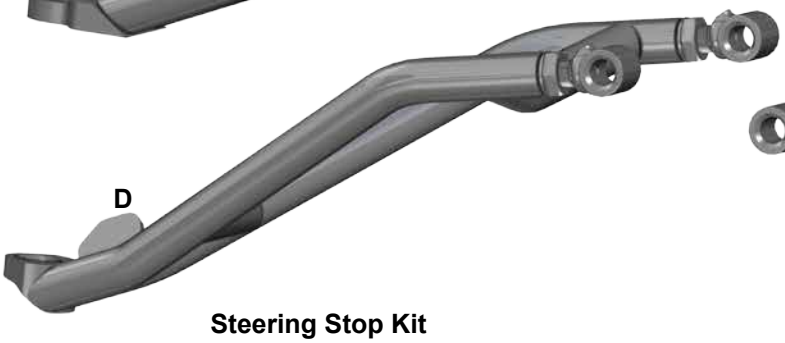



Steering Stop Kit

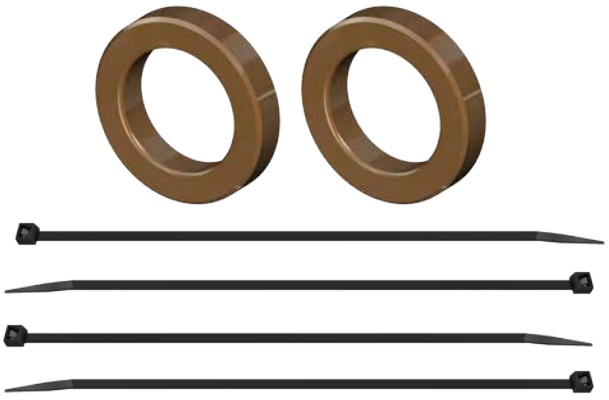

install Bump Stops (E) only on 2020+ models with larger tires; see page 8

use this Steering Stop Kit if SuperATV Portal Gear Hubs are installed

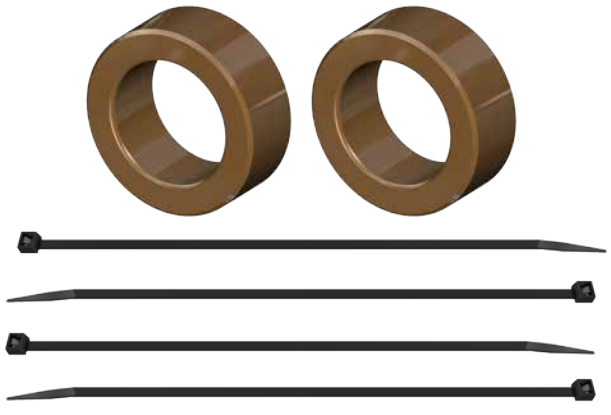

Need help with your installation?

sales@superatv.com

www.superatv.com

1-855-743-3427

8:00am - 8:00pm EST M-Th
8:00am - 7:00pm EST Friday
9:00am - 2:00pm EST Saturday

Read instructions and view illustrations before beginning.

Thank You For Choosing

© 2020 SuperATV.com®. All Rights Reserved.

Front Removal: *Keep all components removed from machine.*

- From both sides of machine, remove components shown.

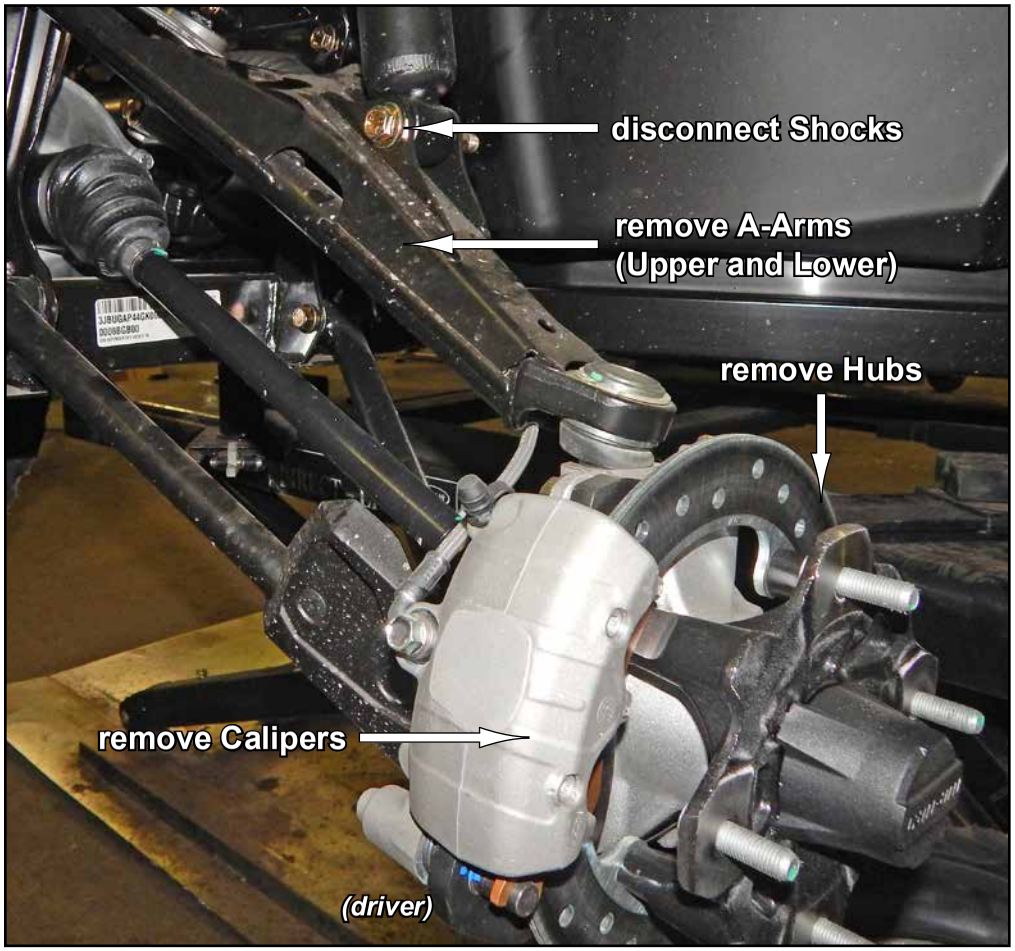

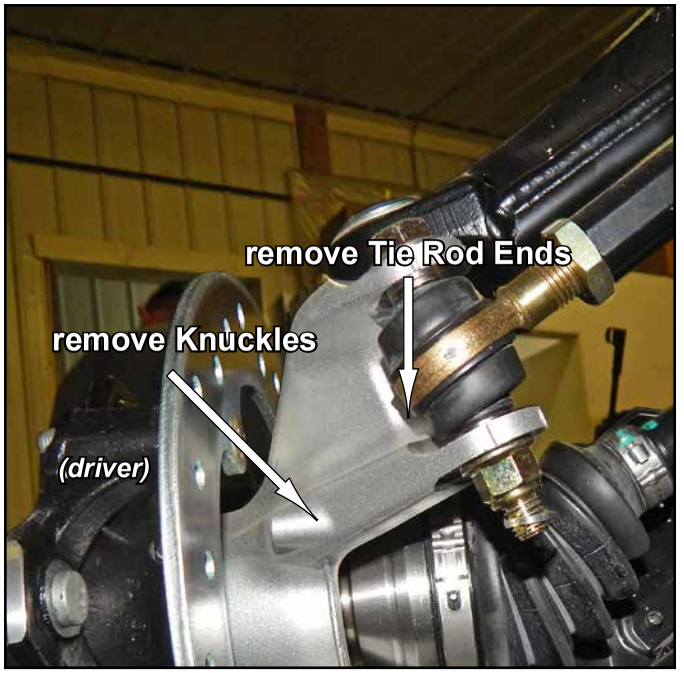

Tip: rotate Knuckle and use setup shown when removing/installing from Upper Arm.





- Install Fittings into Front Arms as shown.
- Install stock Ball Joints into Front Arms.
- Install stock Bushings.

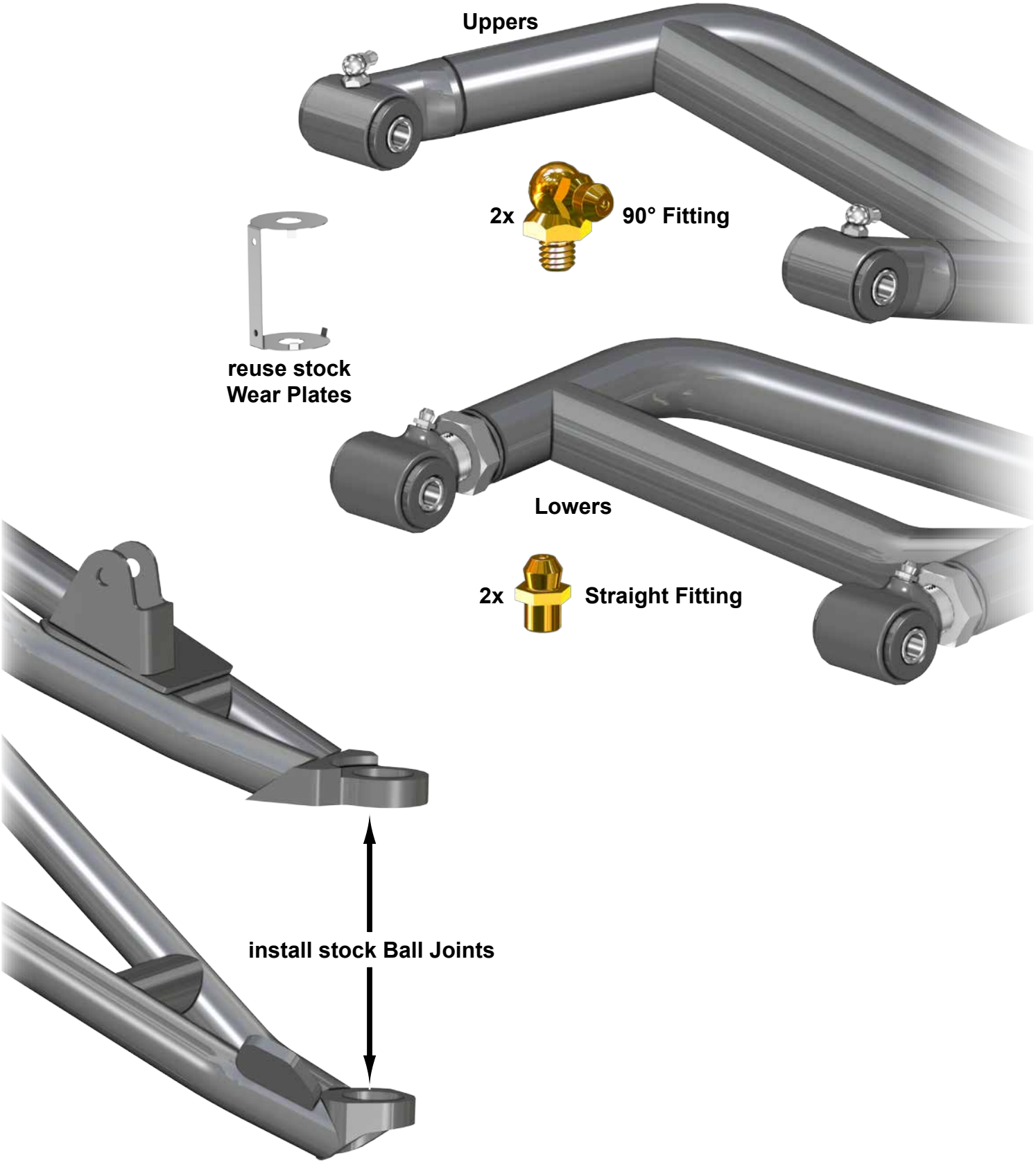

PIVOT BLOCK SETTINGS

- Place new A-Arms onto a flat surface and verify dimension shown.
- *Negative 1° camber setting is achieved when Pivot Blocks are set to this dimension.*
- See last page for additional camber information.

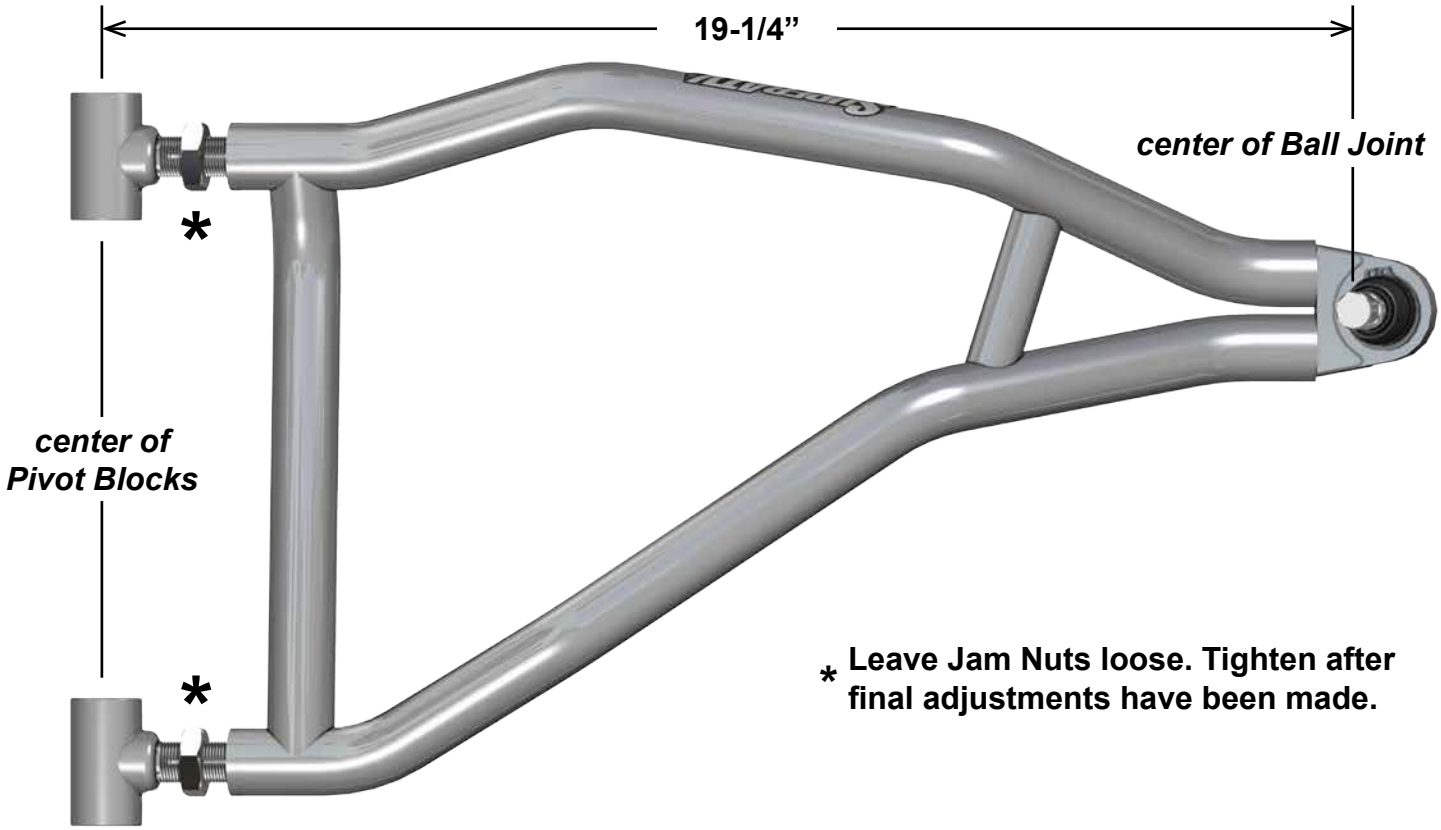

Steering Stop Installation: *Rack and Pinion shown off machine for clarity.*

- Install Steering Stop onto Rack and Pinion Shaft.
- Reinstall Tie Rod to Rack and Pinion. Secure Boot with Wire Tie.
- Repeat steps for opposite side.

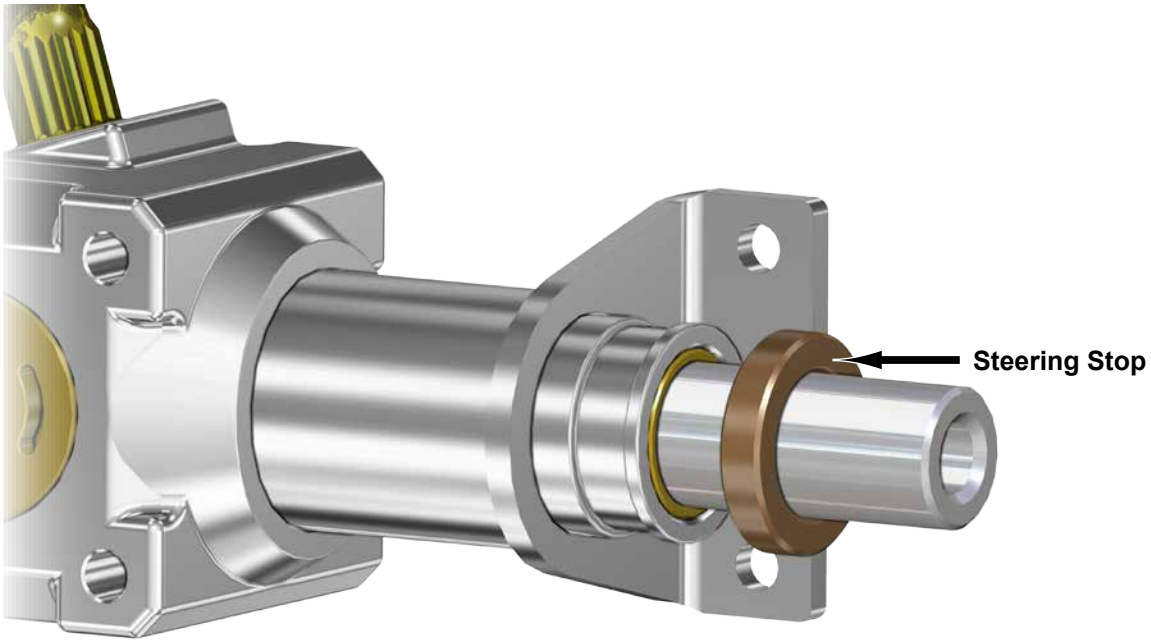



- Install Upper Passenger (C) to Frame with stock hardware. ***Do not install any Nuts until all final adjustments have been completed.***



- Install Lower Passenger (D) to Frame with stock hardware. SuperATV recommends using Loc-Tite on Nuts.

- Reinstall Knuckle to Upper Passenger (C) with stock hardware.
- Secure Shock to Upper Passenger (C) with stock hardware.
- Secure Lower Passenger (D) to Knuckle with stock hardware. ***Do not install Nut until all final adjustments have been completed.***





- Reinstall Hub and Caliper.



- Secure Brake Lines to Upper A-Arms with hardware shown.

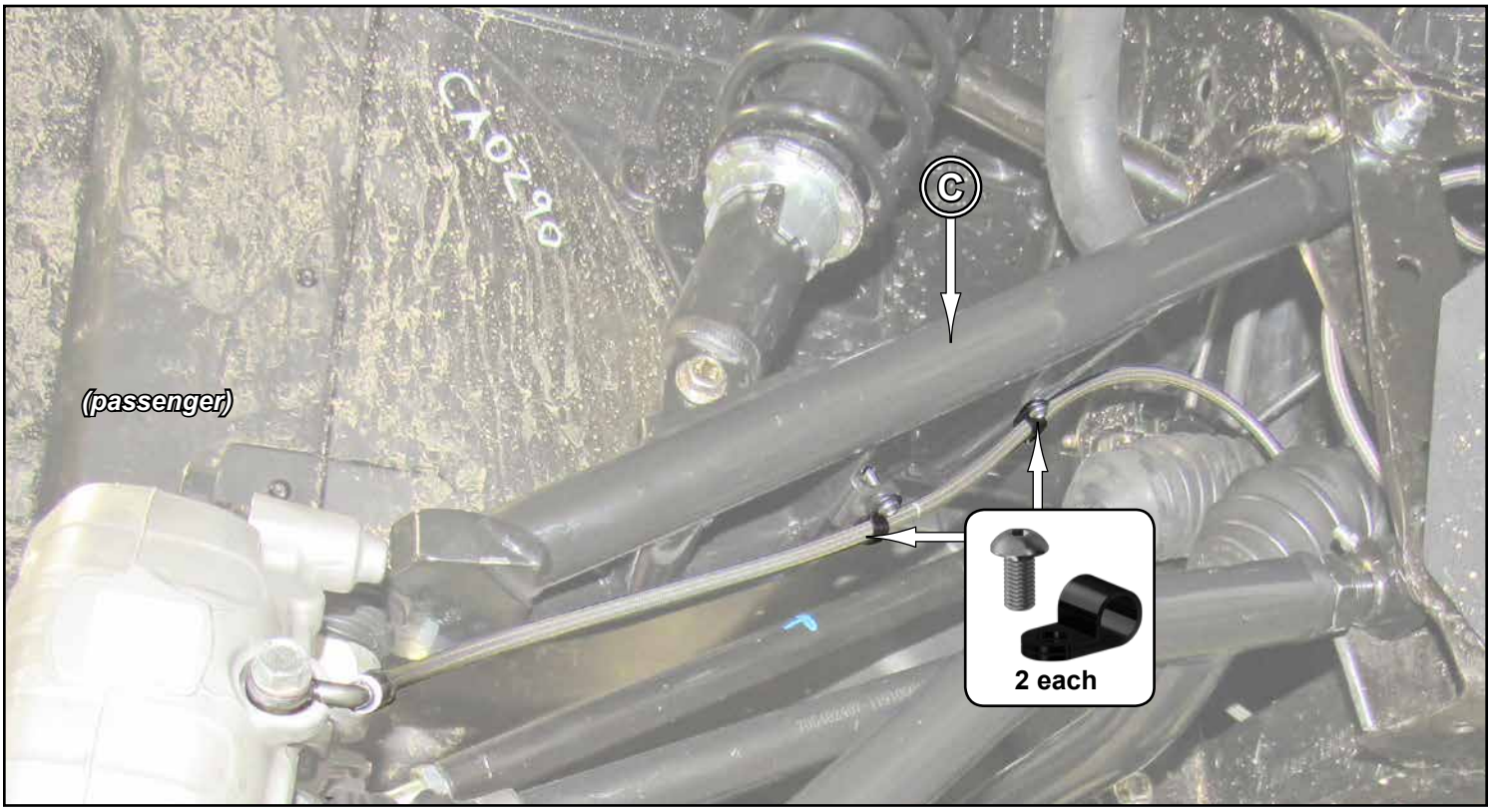

Repeat steps for opposite side.

- Install Bump Stop (E) to Front Shocks as shown.

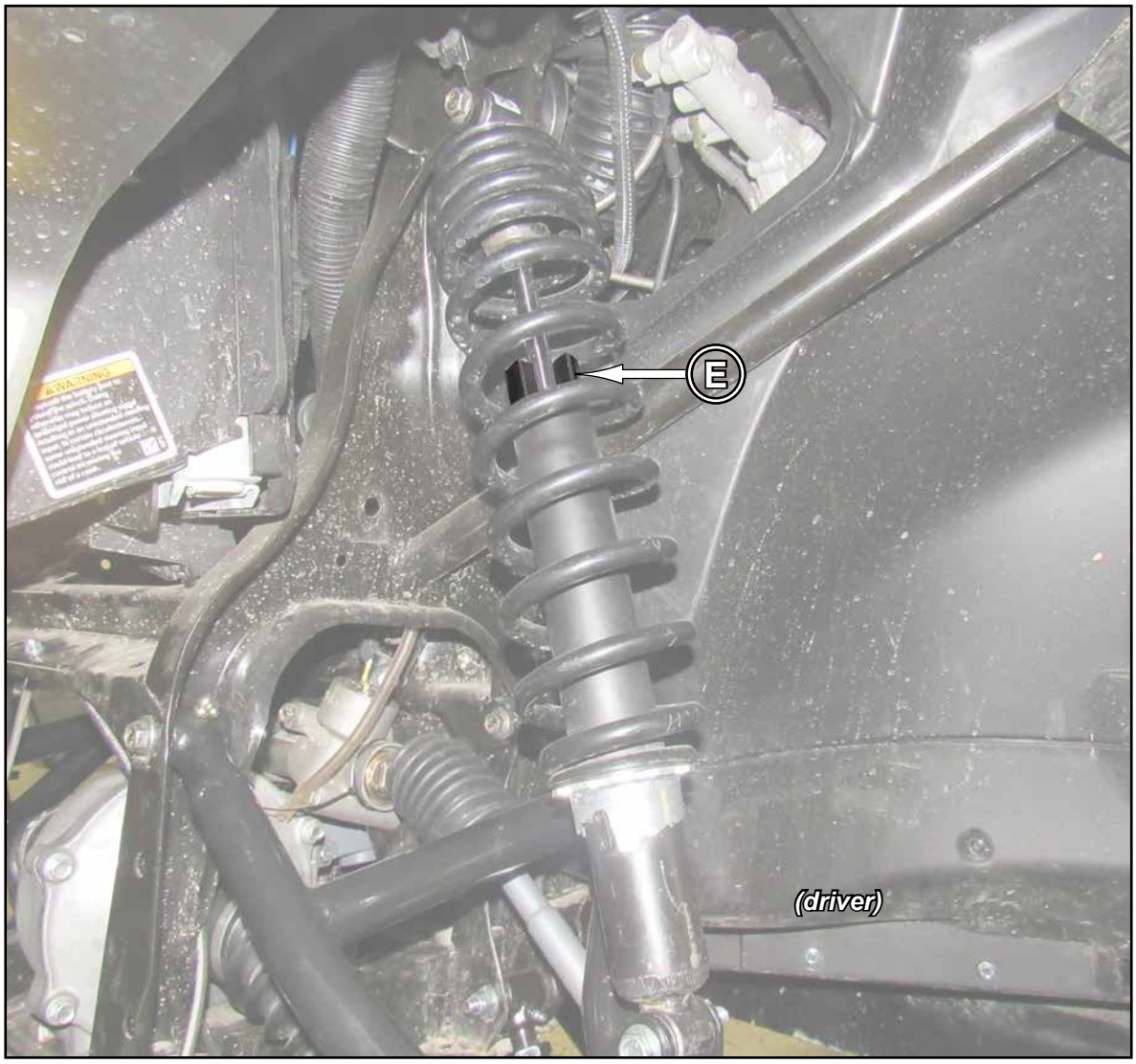

- Reinstall Tires and check Camber settings; see following page.
- Add Nuts to previously installed hardware and tighten completely. SuperATV recommends using Loc-Tite on Nuts.

CAMBER

- **Tires must have equal air pressure before making adjustments.**
- **Adjustments to be made after all suspension components have been completely assembled.**
- **Tires must not be in contact with ground when making adjustments.**
- **Perform adjustments in small increments.**





Adjusting Camber:

- Remove A-Arms from Frame and turn Pivot Blocks to adjust camber. Reinstall Arms.
- Lower machine and settle suspension components by rolling machine back and forth several feet at a time.
- Check settings and make small adjustments as needed.
- Each time an adjustment is made, machine must be rolled back and forth to settle suspension components.
- Once desired setting is achieved, tighten hardware completely. Loc-tite on Nuts is recommended.

A NEGATIVE CAMBER SETTING OF 1° to 2° IS RECOMMENDED.

LOWER:
Too much positive camber: adjust Pivot Blocks *OUT*.
Too much negative camber: adjust Pivot Blocks *IN*.
note: 2 full turns is 1°

UPPER A-ARMS:
Too much positive camber: adjust Pivot Blocks *IN*.
Too much negative camber: adjust Pivot Blocks *OUT*.
note: 2 full turns is 1°

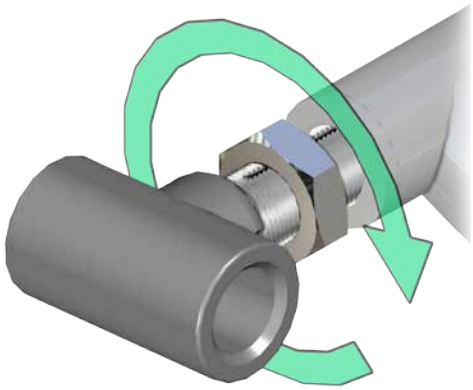

Liability Statement

SuperATV's® products are designed to best fit user's ATV/UTV under stock conditions. Adding, modifying, or fabricating any factory or aftermarket parts will void any warranty provided by SuperATV® and is not recommended. SuperATV's® products could interfere with other aftermarket accessories. If user has aftermarket products on machine, contact SuperATV® to verify that they will work together.

Although SuperATV® has thousands of satisfied customers, user should be aware that installing lift kits, long travel, or suspension kits, tires, etc. will change the ride of machine and may increase maintenance and part wear. Operating any off-road machine while, or after, consuming alcohol and/or drugs increases risk of bodily harm or death. No warranty or representation is made as to this product's ability to protect user from severe injury or death. SuperATV® urges operators and occupants to wear a helmet and appropriate riding gear at all times.

By purchasing and installing SuperATV® products, user agrees that should damages occur, SuperATV® will not be held responsible for loss of time, use, labor fees, replacement parts, or freight charges. SuperATV®, nor any 3rd party, will not be held responsible for any direct, indirect, incidental, special, or consequential damages that result from any product purchased from SuperATV®. The total liability of seller to user for all damages, losses, and causes of action, if any, shall not exceed the total purchase price paid for the product that gave rise to the claim.

SuperATV® will warranty only parts provided by SuperATV®. Any damage or problems with OEM housings, bearings, seals, or other manufacturers' products will not be covered by SuperATV®. SuperATV® parts and products are not warrantied if item was not installed properly, misused, or modified.

Installing, adding, modifying, or fabricating any factory or aftermarket product to your ATV/UTV may violate certain local, state, and federal laws. Be advised that laws vary depending on town, city, county, state, etc. Use of certain products on public streets, roads, or highways may be in violation law. The Buyer is solely and exclusively legally and personally responsible for any violation of the law by the installation or use of the product. You must abide by all local, state, and federal laws, including but not limited to vehicle safety, traffic laws, and ordinances. It is your responsibility to know the laws and how they apply to you.

The Buyer is responsible to fully understand the capability and limitations of his/her vehicle according to manufacturer specifications, warnings and instructions and agrees to hold SuperATV® harmless from any damage resulting from failure to adhere to such specifications, warnings and/ or instructions. The Buyer is also responsible to obey all applicable federal, state, and local laws and ordinances when operating his/her vehicle while using this product, and the Buyer agrees to hold SuperATV® harmless from any violation thereof.