2753 Michigan Road • Madison, Indiana 47250 • 855-743-3427

INSTALLATION INSTRUCTIONS

Rear A-Arms: for Can-Am Defender

Do not discard packaging until product has been successfully installed.

Item	Description
A	Left Upper
B	Right Upper
C	Left Lower
D	Right Lower

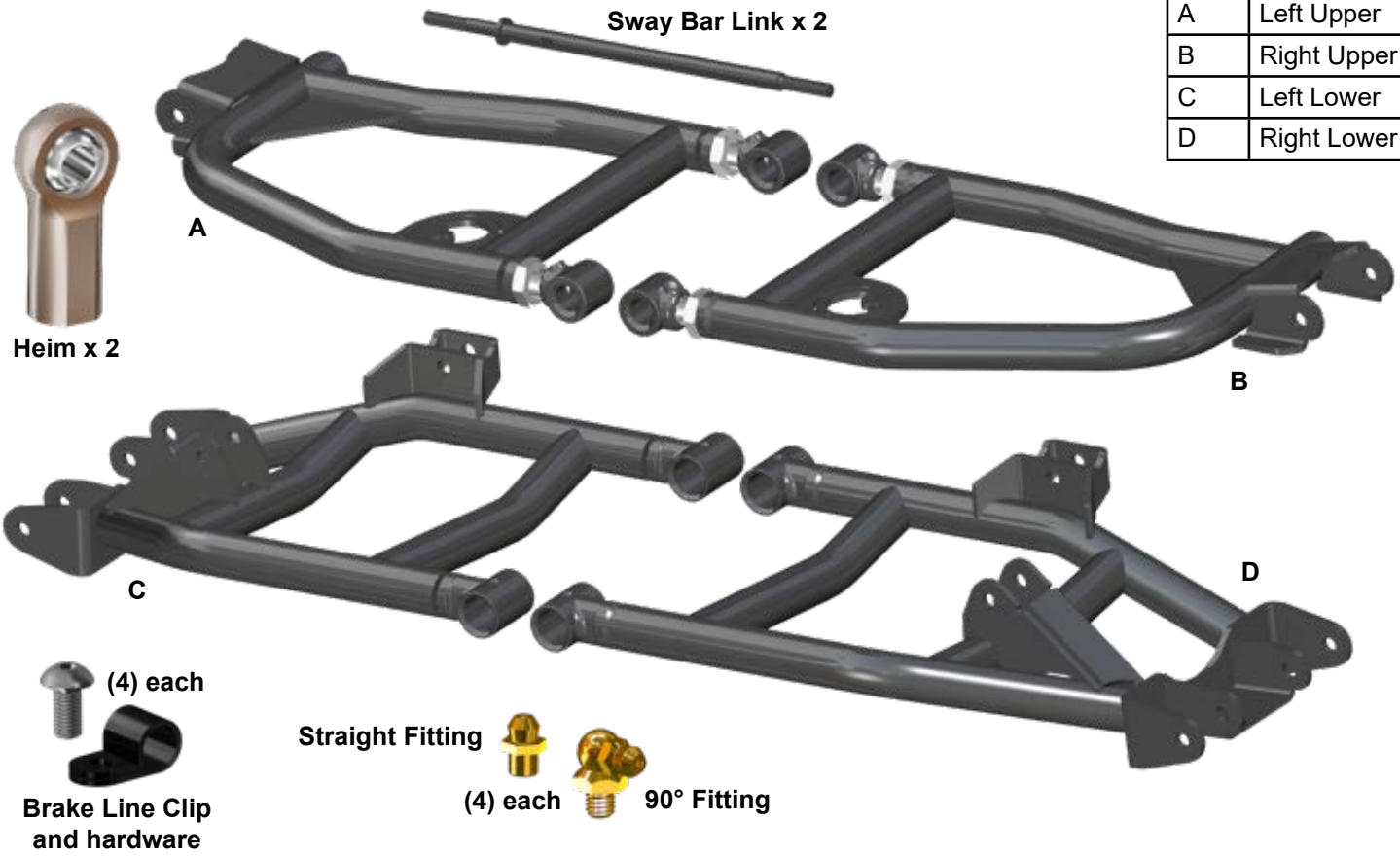

Liability Statement

SuperATV's® products are designed to best fit user's ATV/UTV under stock conditions. Adding, modifying, or fabricating any factory or aftermarket parts will void any warranty provided by SuperATV® and is not recommended. SuperATV's® products could interfere with other aftermarket accessories. If user has aftermarket products on machine, contact SuperATV® to verify that they will work together.

Although SuperATV® has thousands of satisfied customers, user should be aware that installing lift kits, long travel, or suspension kits, tires, etc. will change the ride of machine and may increase maintenance and part wear. Operating any off-road machine while, or after, consuming alcohol and/or drugs increases risk of bodily harm or death. No warranty or representation is made as to this product's ability to protect user from severe injury or death. SuperATV® urges operators and occupants to wear a helmet and appropriate riding gear at all times.

By purchasing and installing SuperATV® products, user agrees that should damages occur, SuperATV® will not be held responsible for loss of time, use, labor fees, replacement parts, or freight charges. SuperATV®, nor any 3rd party, will not be held responsible for any direct, indirect, incidental, special, or consequential damages that result from any product purchased from SuperATV®. The total liability of seller to user for all damages, losses, and causes of action, if any, shall not exceed the total purchase price paid for the product that gave rise to the claim.

SuperATV® will warranty only parts provided by SuperATV®. Any damage or problems with OEM housings, bearings, seals, or other manufacturers' products will not be covered by SuperATV®. SuperATV® parts and products are not warrantied if item was not installed properly, misused, or modified.

Installing, adding, modifying, or fabricating any factory or aftermarket product to your ATV/UTV may violate certain local, state, and federal laws. Be advised that laws vary depending on town, city, county, state, etc. Use of certain products on public streets, roads, or highways may be in violation law. The Buyer is solely and exclusively legally and personally responsible for any violation of the law by the installation or use of the product. You must abide by all local, state, and federal laws, including but not limited to vehicle safety, traffic laws, and ordinances. It is your responsibility to know the laws and how they apply to you.

The Buyer is responsible to fully understand the capability and limitations of his/her vehicle according to manufacturer specifications, warnings and instructions and agrees to hold SuperATV® harmless from any damage resulting from failure to adhere to such specifications, warnings and/ or instructions. The Buyer is also responsible to obey all applicable federal, state, and local laws and ordinances when operating his/her vehicle while using this product, and the Buyer agrees to hold SuperATV® harmless from any violation thereof.

Need help with your installation?

sales@superatv.com

www.superatv.com

1-855-743-3427

8:00am - 8:00pm EST M-Th
8:00am - 7:00pm EST Friday
9:00am - 2:00pm EST Saturday

Read instructions and view illustrations before beginning.

Thank You For Choosing SUPERATV.COM®

© 2023 SuperATV.com®. All Rights Reserved.

Rev IN-AA-CA-DEF-R-001 ~ IN-AA-CA-DEF-R-003 7/24/2024

Keep all components removed from machine; driver side shown



repeat for opposite side

- Install provided Fittings into Pivot Blocks as shown.
- Install stock Bushings into new A-Arms.

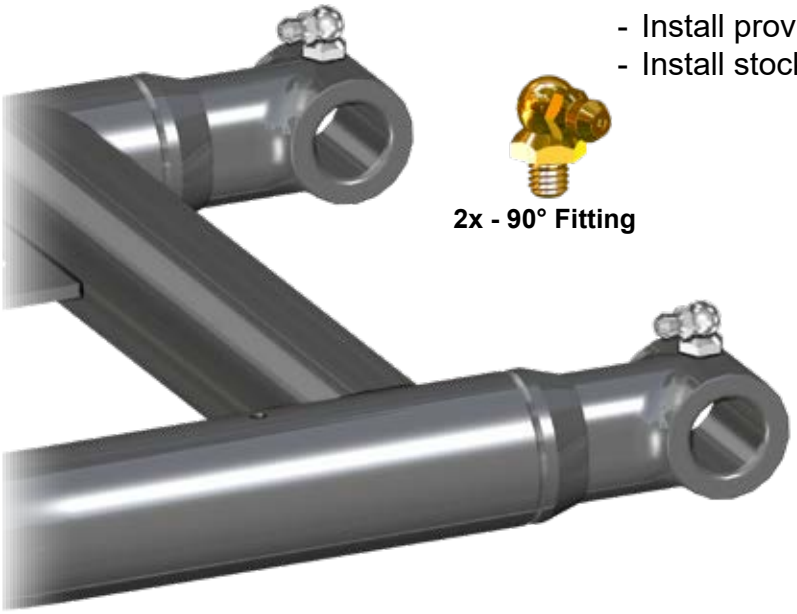

2x - 90° Fitting



2x - Straight Fitting

PIVOT BLOCK SETTINGS

- Place new A-Arms onto a flat surface and verify dimension shown.
- *Negative 1° camber setting is achieved when Pivot Blocks are set to this dimension.*
- See last page for additional camber information.

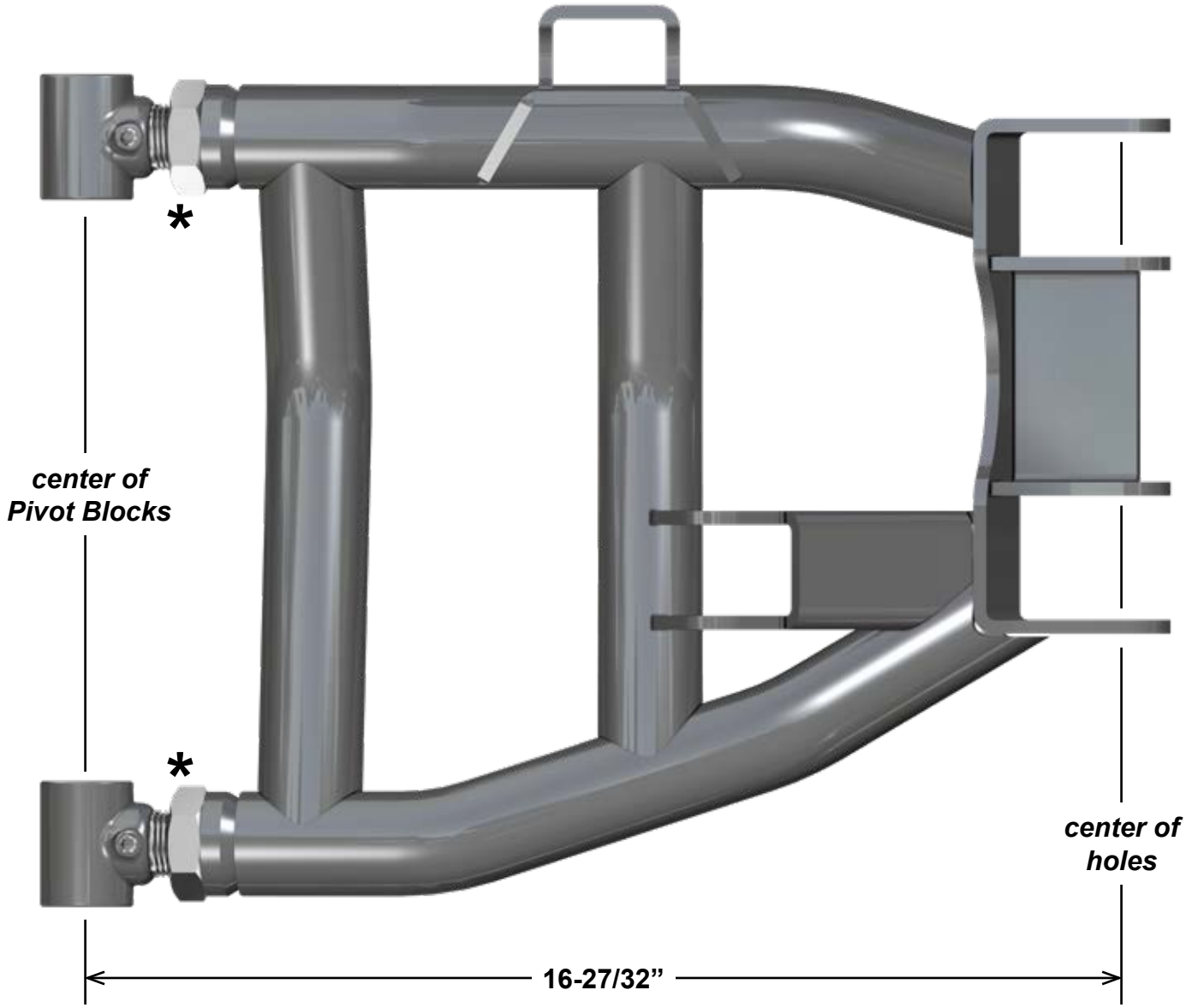

***Leave Jam Nuts loose. Tighten after final adjustments have been made.**

- Secure Lower A-Arms to Frame with stock hardware; ***keep Nuts loose until all final adjustments have been completed.***



- Install Heims to Sway Bar Link and install to Lower Arm.
- Secure Sway Bar Link with components shown.

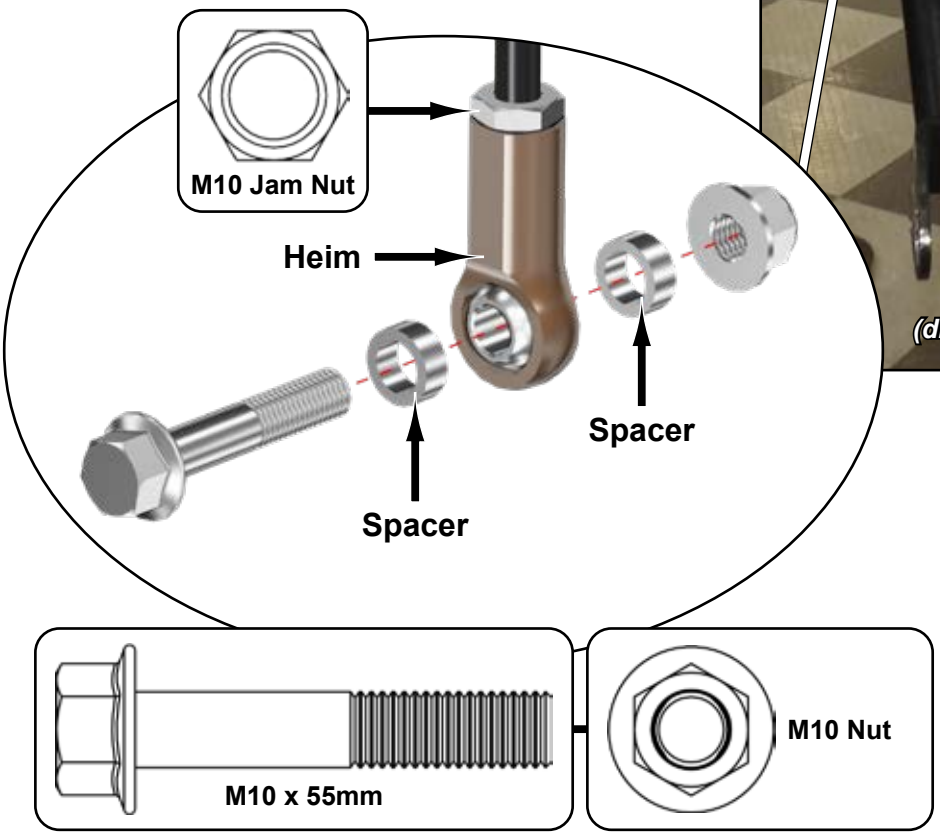

- Reinstall Knuckle to Lower A-Arms with stock hardware; ***keep Nuts loose until all final adjustments have been completed.***
- Secure Upper A-Arms to Frame with stock hardware; tighten hardware. SuperATV recommends using Loc-Tite on Nuts.



- Reinstall Knuckle to Upper A-Arms with hardware shown; ***keep Nuts loose until all final adjustments have been completed.***
- Secure Shocks to Lower A-Arms with hardware shown; tighten hardware.
- Reinstall Knuckle to Lower A-Arms with stock hardware; tighten hardware. **SEE BELOW FOR IMPORTANT SPACER INFORMATION.**

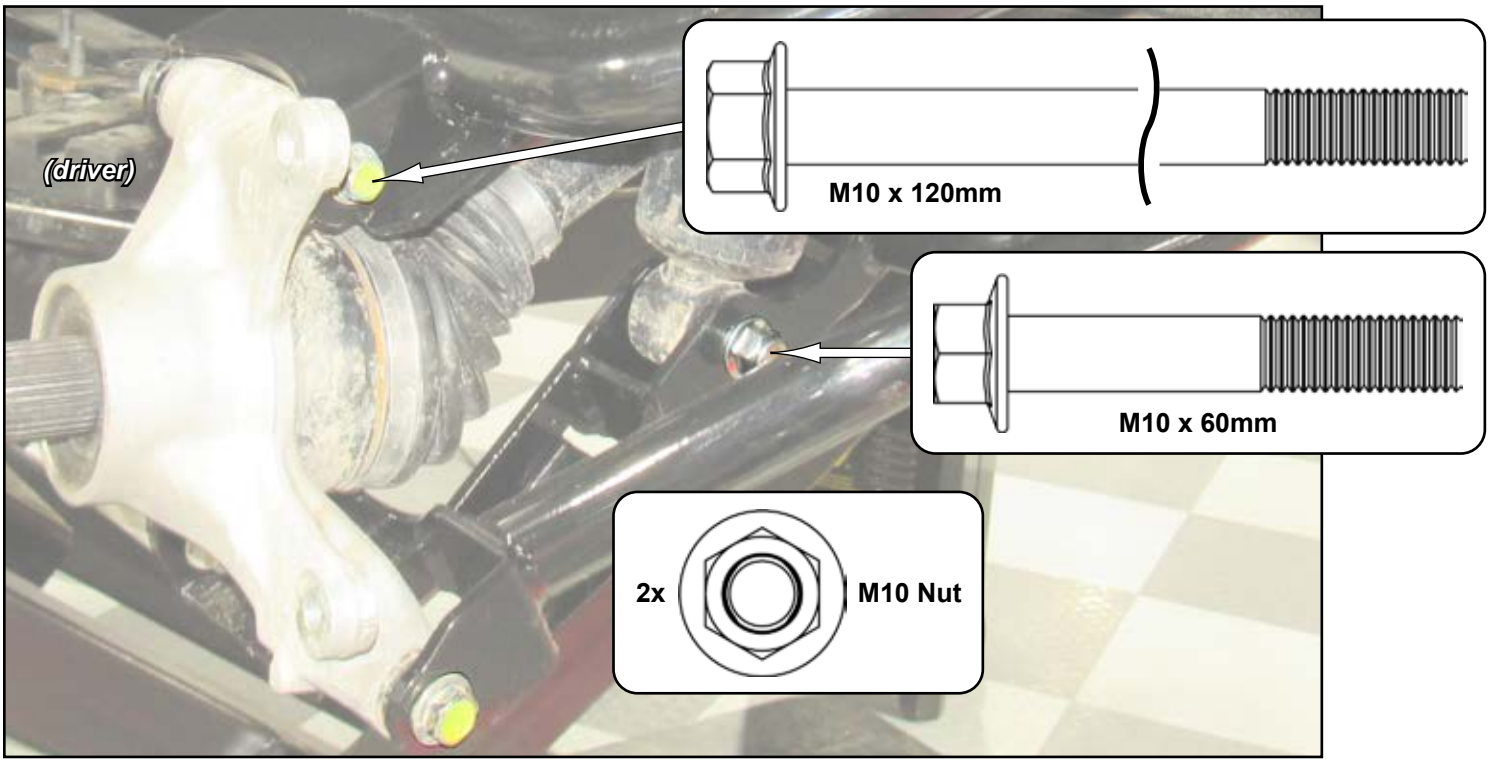

After securing Lower Arms to Knuckle, gaps between Pivot Block faces and Knuckles may be present. Install provided Spacers as shown if applicable.

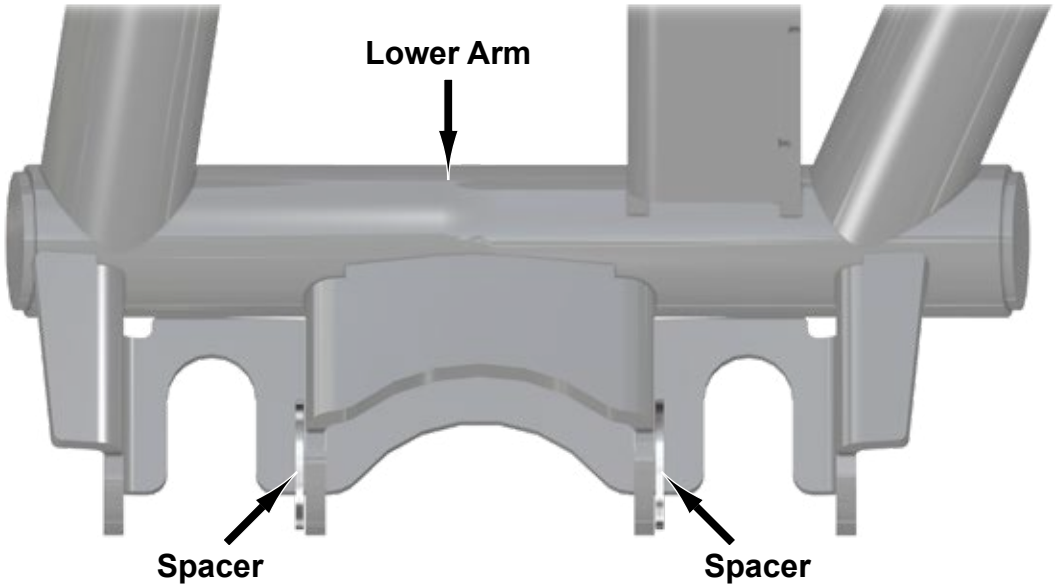

- Reinstall Calipers and Hubs. Secure Brake Lines to Upper Arms with components shown.

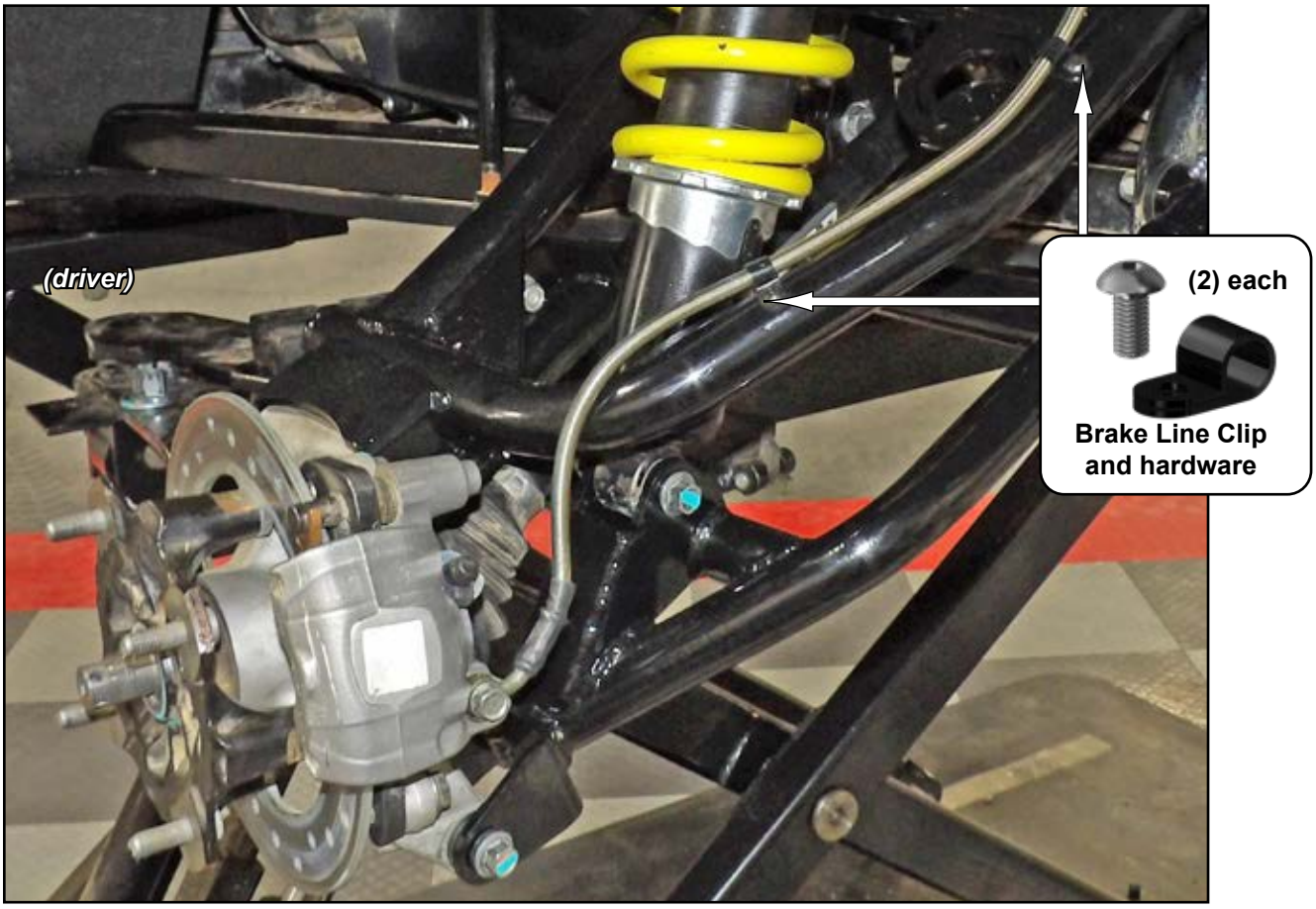

- Reinstall Tires and check Camber settings; see following page.
- Tighten all hardware completely.

CAMBER

- **Tires must have equal air pressure before making adjustments.**
- **Adjustments to be made after all suspension components have been completely assembled.**
- **Tires must not be in contact with ground when making adjustments.**
- **Perform adjustments in small increments.**





Adjusting Camber:

- Remove A-Arms from Frame and turn Pivot Blocks to adjust camber. Reinstall Arms.
- Lower machine and settle suspension components by rolling machine back and forth several feet at a time.
- Check settings and make small adjustments as needed.
- Each time an adjustment is made, machine must be rolled back and forth to settle suspension components.
- Once desired setting is achieved, tighten hardware completely. Loc-tite on Nuts is recommended.

A NEGATIVE CAMBER SETTING OF 1° to 2° IS RECOMMENDED.

LOWER:
Too much positive camber: adjust Pivot Blocks *OUT*.
Too much negative camber: adjust Pivot Blocks *IN*.
note: 2 full turns is 1°

UPPER A-ARMS:
Too much positive camber: adjust Pivot Blocks *IN*.
Too much negative camber: adjust Pivot Blocks *OUT*.
note: 2 full turns is 1°

