2753 Michigan Road • Madison, Indiana 47250 • 855-743-3427

INSTALLATION INSTRUCTIONS

Front A-Arm Bushings:
for Can-Am Maverick R (2024+)

- A Press or Ball Joint tool is required to remove and install Ball Joints.
- Do not discard packaging until product has been successfully installed.



SKU: AAB-CA-MAVR-UF
4x - Upper Bushing



SKU: AAB-CA-MAVR-LF
4x - Lower Bushing

Liability Statement

SuperATV's® products are designed to best fit user's ATV/UTV under stock conditions. Adding, modifying, or fabricating any factory or aftermarket parts will void any warranty provided by SuperATV® and is not recommended. SuperATV's® products could interfere with other aftermarket accessories. If user has aftermarket products on machine, contact SuperATV® to verify that they will work together.

Although SuperATV® has thousands of satisfied customers, user should be aware that installing lift kits, long travel, or suspension kits, tires, etc. will change the ride of machine and may increase maintenance and part wear. Operating any off-road machine while, or after, consuming alcohol and/or drugs increases risk of bodily harm or death. No warranty or representation is made as to this product's ability to protect user from severe injury or death. SuperATV® urges operators and occupants to wear a helmet and appropriate riding gear at all times.

By purchasing and installing SuperATV® products, user agrees that should damages occur, SuperATV® will not be held responsible for loss of time, use, labor fees, replacement parts, or freight charges. SuperATV®, nor any 3rd party, will not be held responsible for any direct, indirect, incidental, special, or consequential damages that result from any product purchased from SuperATV®. The total liability of seller to user for all damages, losses, and causes of action, if any, shall not exceed the total purchase price paid for the product that gave rise to the claim.

SuperATV® will warranty only parts provided by SuperATV®. Any damage or problems with OEM housings, bearings, seals, or other manufacturers' products will not be covered by SuperATV®. SuperATV® parts and products are not warrantied if item was not installed properly, misused, or modified.

Installing, adding, modifying, or fabricating any factory or aftermarket product to your ATV/UTV may violate certain local, state, and federal laws. Be advised that laws vary depending on town, city, county, state, etc. Use of certain products on public streets, roads, or highways may be in violation law. The Buyer is solely and exclusively legally and personally responsible for any violation of the law by the installation or use of the product. You must abide by all local, state, and federal laws, including but not limited to vehicle safety, traffic laws, and ordinances. It is your responsibility to know the laws and how they apply to you.

The Buyer is responsible to fully understand the capability and limitations of his/her vehicle according to manufacturer specifications, warnings and instructions and agrees to hold SuperATV® harmless from any damage resulting from failure to adhere to such specifications, warnings and/ or instructions. The Buyer is also responsible to obey all applicable federal, state, and local laws and ordinances when operating his/her vehicle while using this product, and the Buyer agrees to hold SuperATV® harmless from any violation thereof.

Need help with your installation?

sales@superatv.com
www.superatv.com
1-855-743-3427
8:00am - 8:00pm EST M-Th
8:00am - 7:00pm EST Friday
9:00am - 2:00pm EST Saturday

Read instructions and view illustrations before beginning.

Thank You For Choosing

© 2025 SuperATV.com®. All Rights Reserved.

Removal: *Keep all components removed from machine.*

stock components must be removed:

- If applicable, remove Link from Upper (see pg. 4)
- Caliper
- Hub
- Shock from Arm
- Tie Rod from Knuckle
- Knuckle
- Upper and/or Lower Arms depending on which Bushing Kit is being installed
- Brake Line and Stabilizer Link from Lower

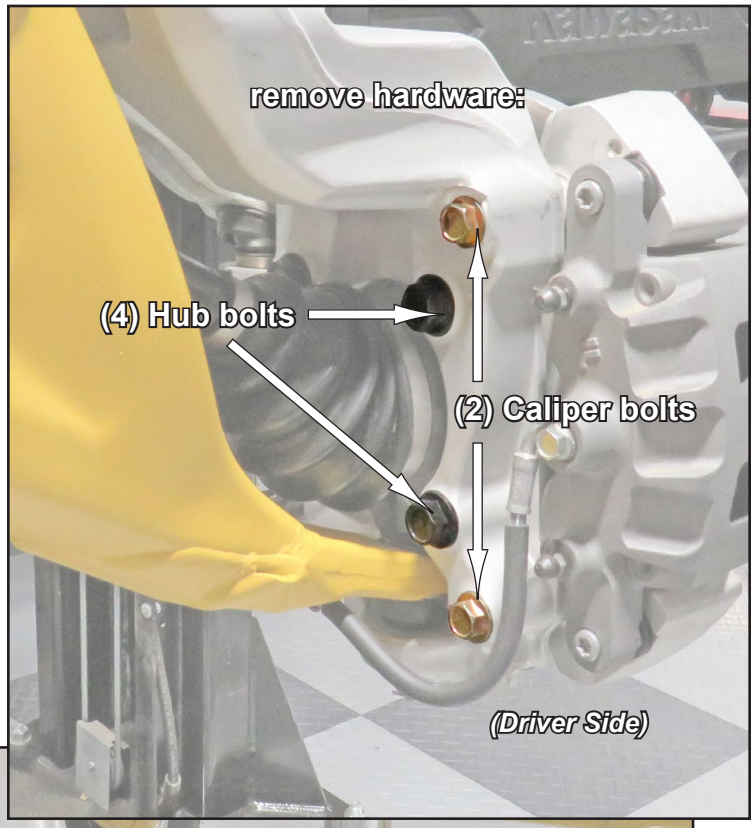

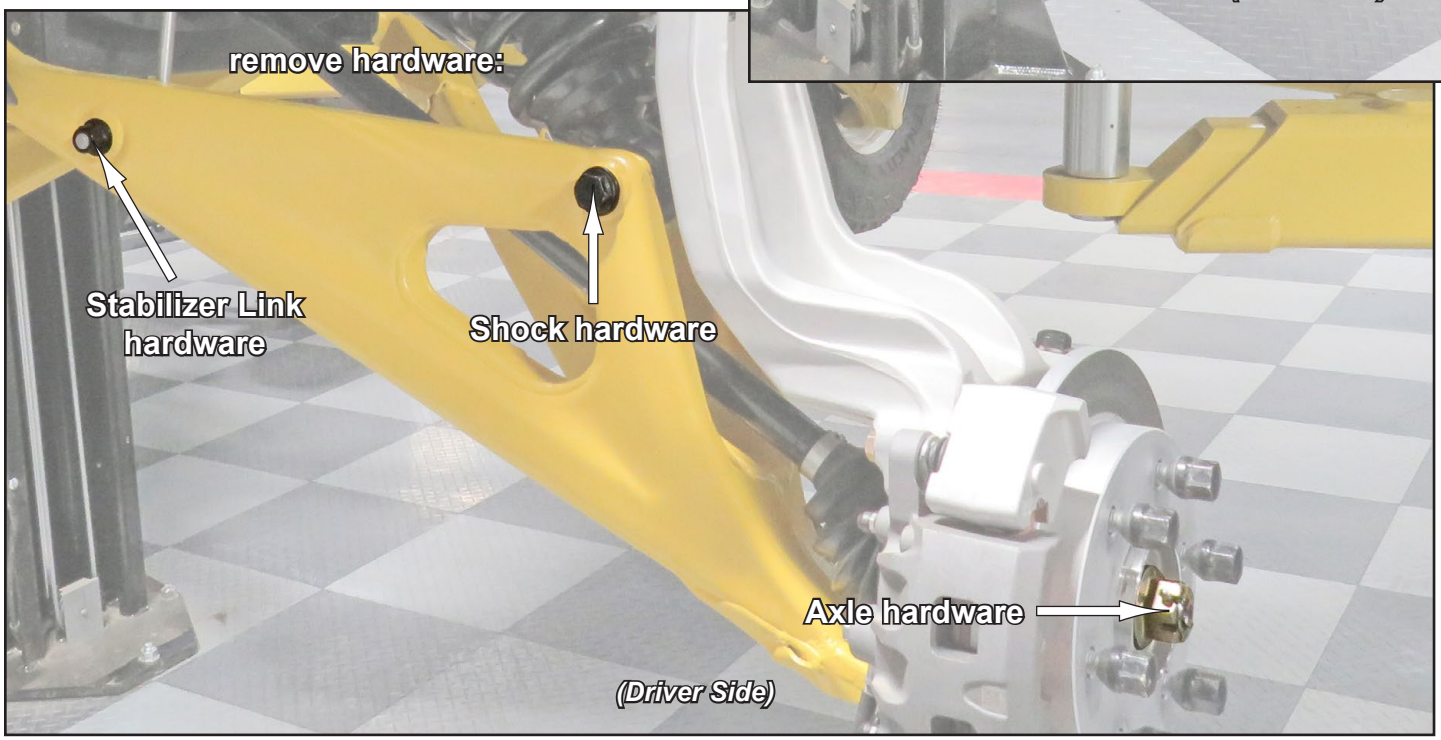

Removal continued

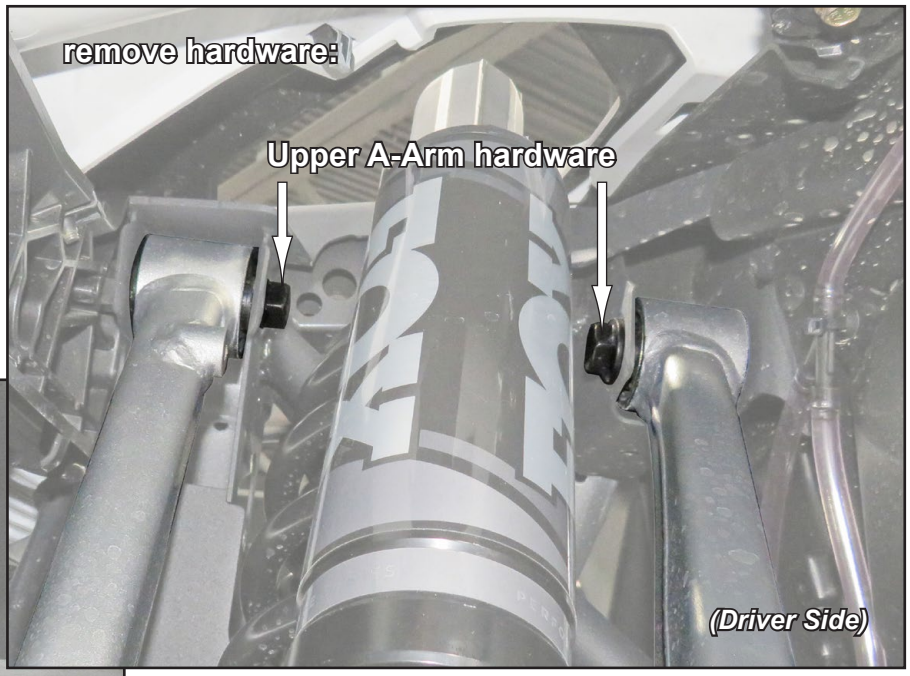

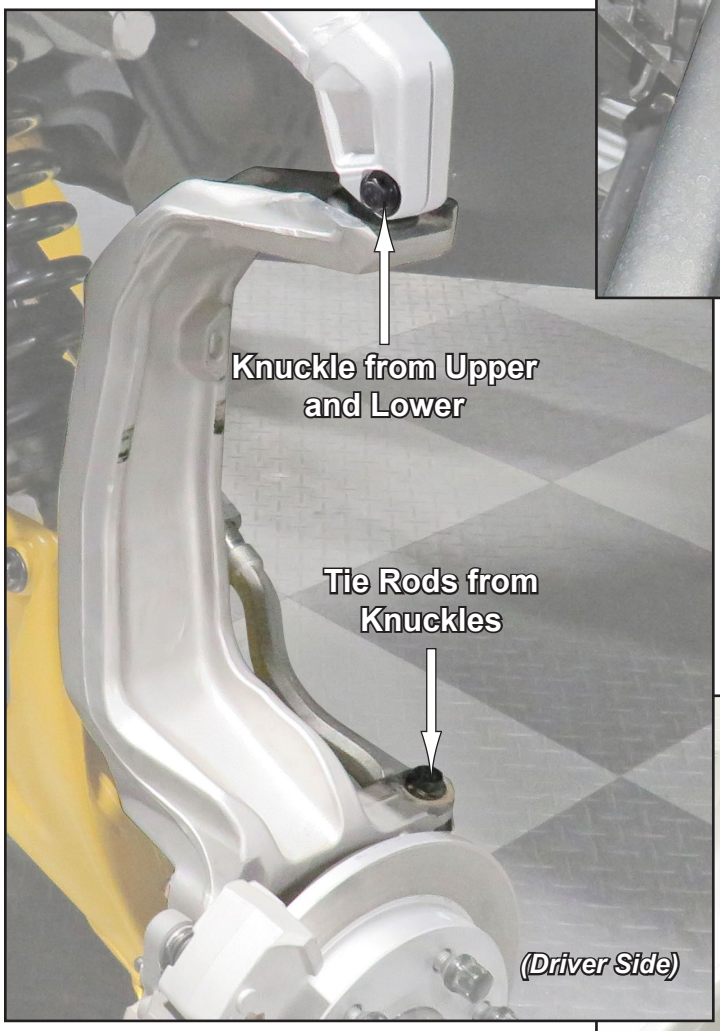

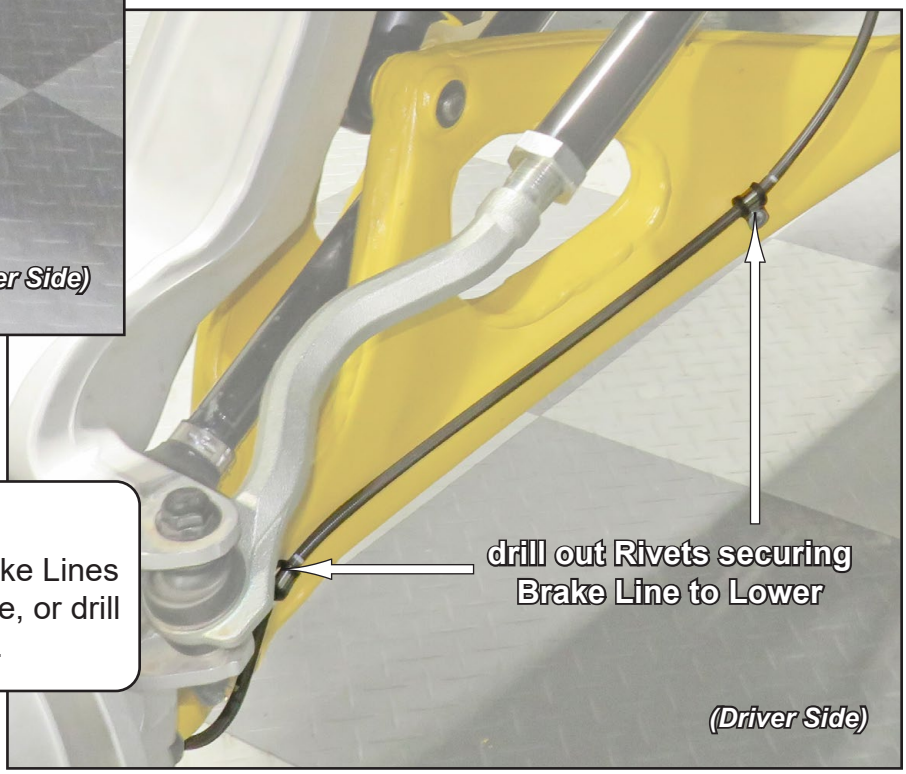

Stock A-Arms:
Installer will need to resecure Brake Lines with Rivets, Self Tapping hardware, or drill and tap holes for Screws.

repreat steps for passenger side removal

Machines equipped with Smart-Shox:

- Disconnect Links from A-Arms.

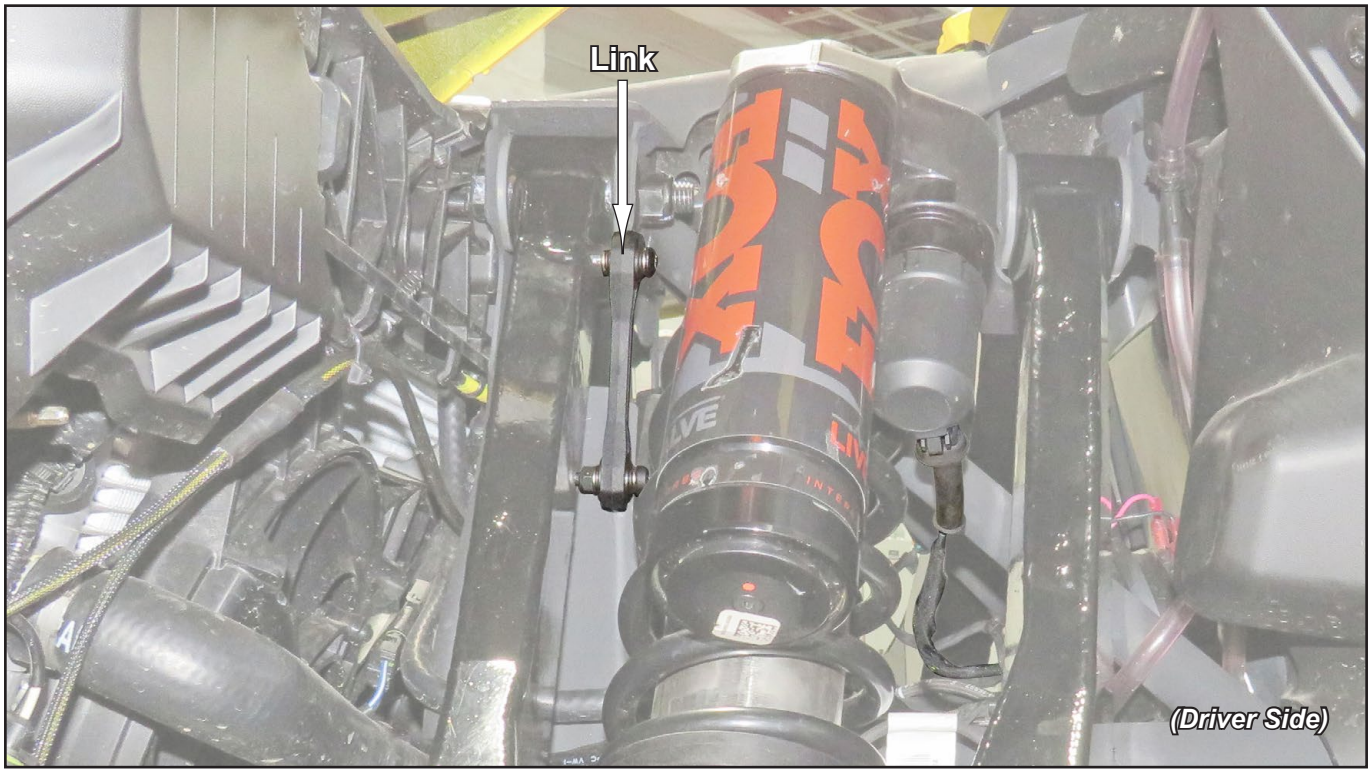

- Install Bushings into Arms and reinstall Arms to machine.
- Ensure that all hardware is tightened to factory specifications.
- SuperATV recommends using thread locker on all Arm to Frame connections.