2753 Michigan Road • Madison, Indiana 47250 • 855-743-3427

INSTALLATION INSTRUCTIONS

Doors: for Honda Talon

Do not discard packaging until product has been successfully installed.

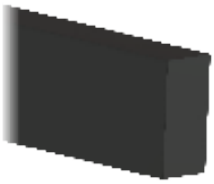

Gasket



Seal



Right Door

Right Window

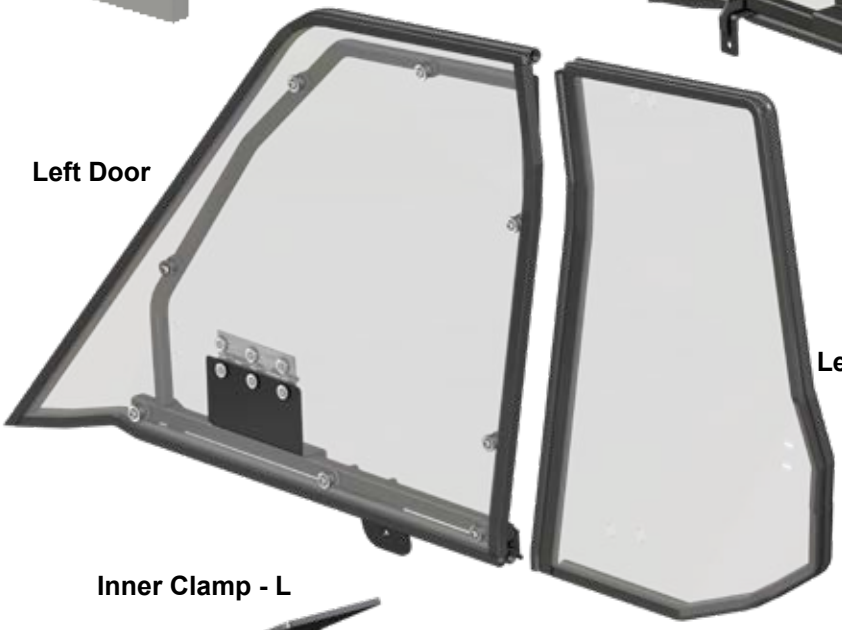

Left Door

Left Window



4x - Clamp



Inner Clamp - L



Outer Clamp - L



Inner Clamp - R



Outer Clamp - R



Door Clamp - L



Gasket x 2



Door Clamp - R

Need help with your installation?

sales@superatv.com

www.superatv.com

1-855-743-3427

8:00am - 8:00pm EST M-Th
8:00am - 7:00pm EST Friday
9:00am - 2:00pm EST Saturday

Read instructions and view illustrations before beginning.

Thank You For Choosing

© 2022 SuperATV.com. All Rights Reserved.

Door Cleaning:

- Do not use Rain-X®, Plexus® or any other protector, wax, or polish.
- Do not use window cleaning fluids (Windex, 409, etc) or any solvents (gasoline, denatured alcohol, acetone, etc).
- Never use abrasive cleaners, abrasive pads, or gritty cloths.
- Never use razor blades, scrapers, squeegees, brushes, etc.

1. Thoroughly rinse Doors to float off dirt and mud.
2. Using a soft cloth, or microfiber cloth, clean Doors with warm water and a gentle detergent. Baby shampoo, rubbing alcohol, or hand washing soap can also be used.
3. To prevent water spots, use a chamois to blot Doors dry.

Liability Statement

SuperATV's® products are designed to best fit user's ATV/UTV under stock conditions. Adding, modifying, or fabricating any factory or aftermarket parts will void any warranty provided by SuperATV® and is not recommended. SuperATV's® products could interfere with other aftermarket accessories. If user has aftermarket products on machine, contact SuperATV® to verify that they will work together.

Although SuperATV® has thousands of satisfied customers, user should be aware that installing lift kits, long travel, or suspension kits, tires, etc. will change the ride of machine and may increase maintenance and part wear. Operating any off-road machine while, or after, consuming alcohol and/or drugs increases risk of bodily harm or death. No warranty or representation is made as to this product's ability to protect user from severe injury or death. SuperATV® urges operators and occupants to wear a helmet and appropriate riding gear at all times.

By purchasing and installing SuperATV® products, user agrees that should damages occur, SuperATV® will not be held responsible for loss of time, use, labor fees, replacement parts, or freight charges. SuperATV®, nor any 3rd party, will not be held responsible for any direct, indirect, incidental, special, or consequential damages that result from any product purchased from SuperATV®. The total liability of seller to user for all damages, losses, and causes of action, if any, shall not exceed the total purchase price paid for the product that gave rise to the claim.

SuperATV® will warranty only parts provided by SuperATV®. Any damage or problems with OEM housings, bearings, seals, or other manufacturers' products will not be covered by SuperATV®. SuperATV® parts and products are not warrantied if item was not installed properly, misused, or modified.

Installing, adding, modifying, or fabricating any factory or aftermarket product to your ATV/UTV may violate certain local, state, and federal laws. Be advised that laws vary depending on town, city, county, state, etc. Use of certain products on public streets, roads, or highways may be in violation law. The Buyer is solely and exclusively legally and personally responsible for any violation of the law by the installation or use of the product. You must abide by all local, state, and federal laws, including but not limited to vehicle safety, traffic laws, and ordinances. It is your responsibility to know the laws and how they apply to you.

The Buyer is responsible to fully understand the capability and limitations of his/her vehicle according to manufacturer specifications, warnings and instructions and agrees to hold SuperATV® harmless from any damage resulting from failure to adhere to such specifications, warnings and/ or instructions. The Buyer is also responsible to obey all applicable federal, state, and local laws and ordinances when operating his/her vehicle while using this product, and the Buyer agrees to hold SuperATV® harmless from any violation thereof.

- Remove (3) screws shown and Window Net.



- Install Left Door with hardware shown; tighten hardware.

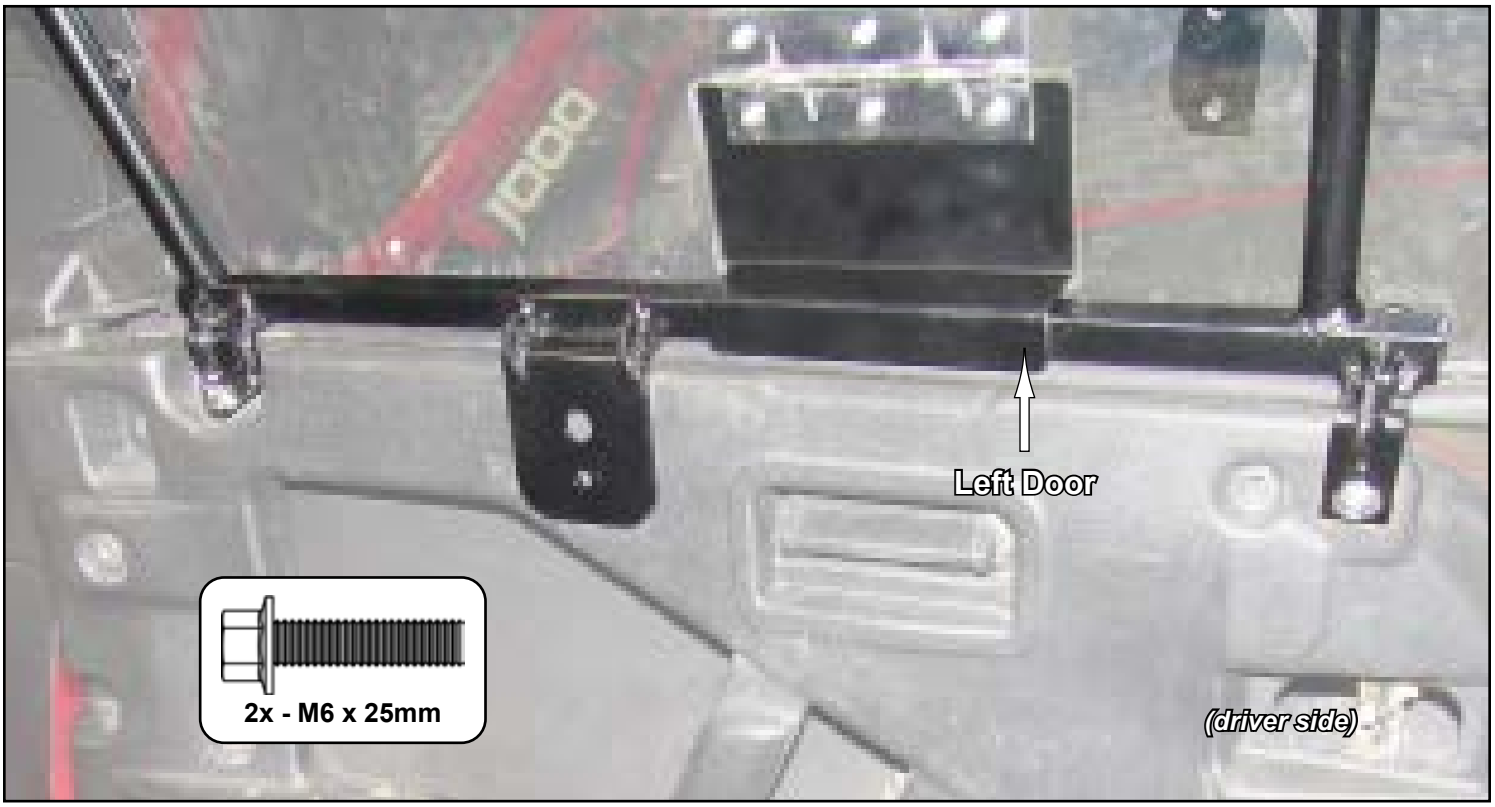

- Remove screws shown and Panel.



- Use hole in Bracket, on Left Door, as a guide and drill through stock plastic. Hole must be large enough for an Ø8mm bolt.





- Install Door Clamp - L with hardware shown.

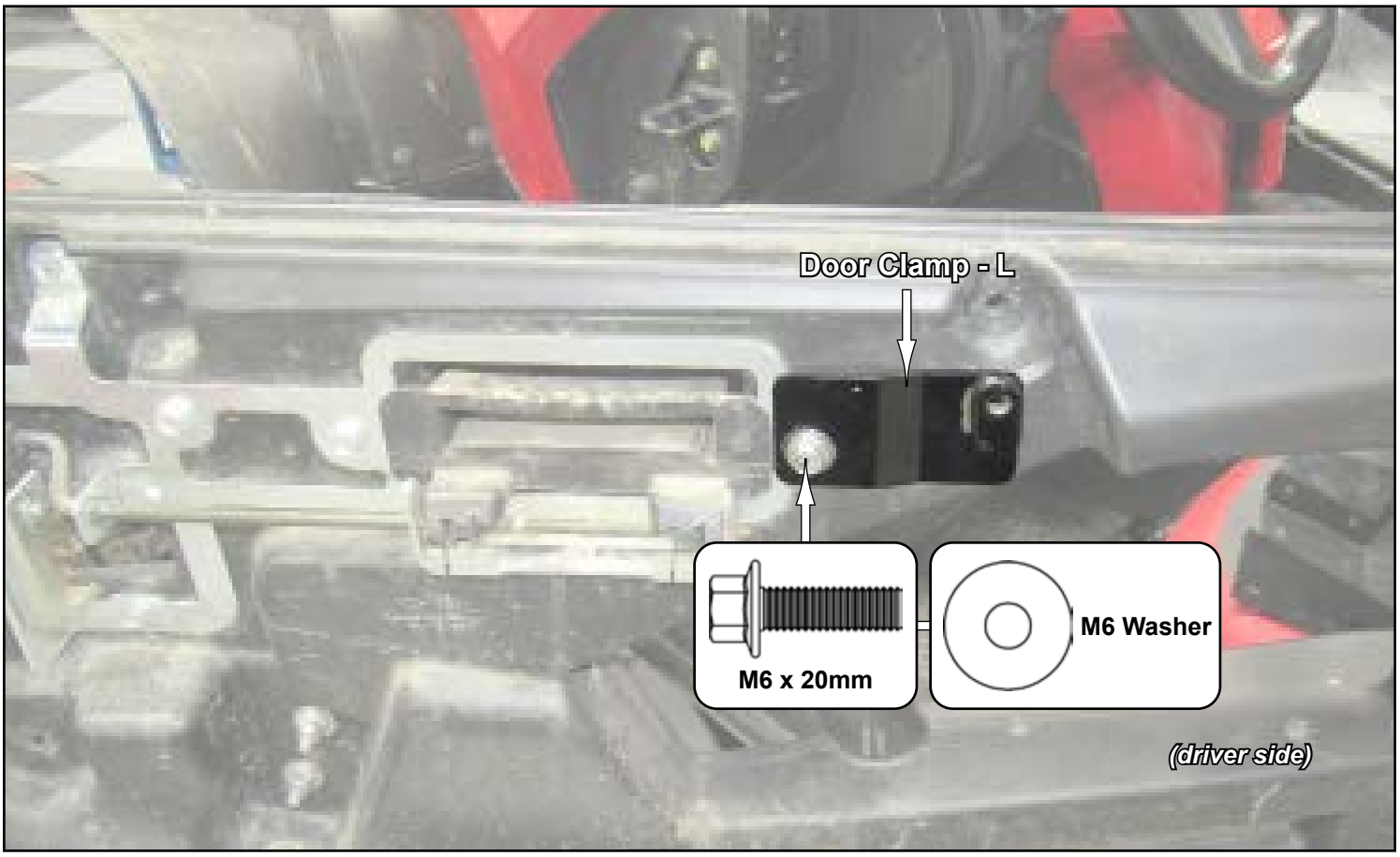

- Reinstall Left Door with hardware shown; tighten hardware.

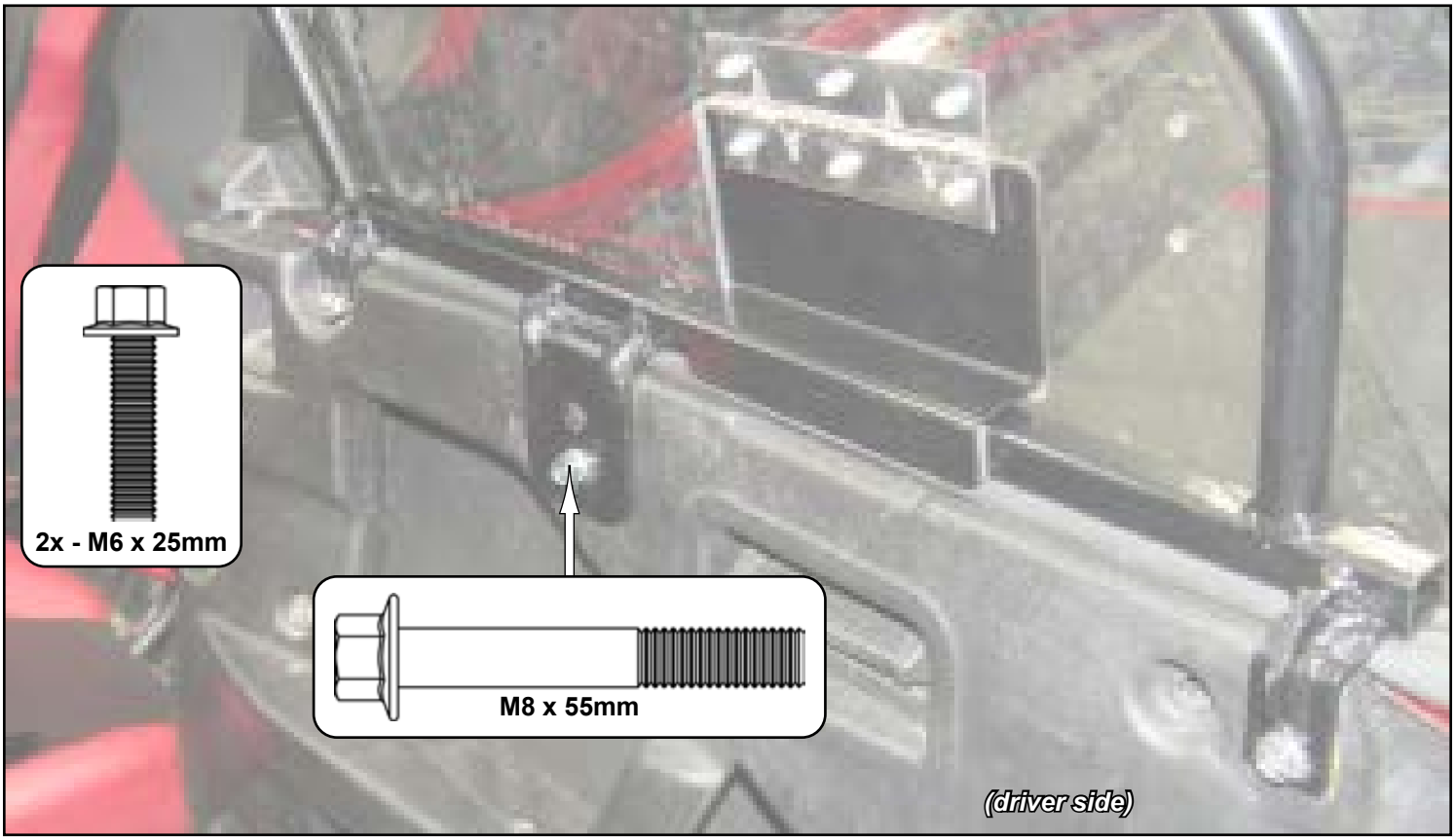

- Install Clamps to Left Windshield with hardware shown; do not tighten.

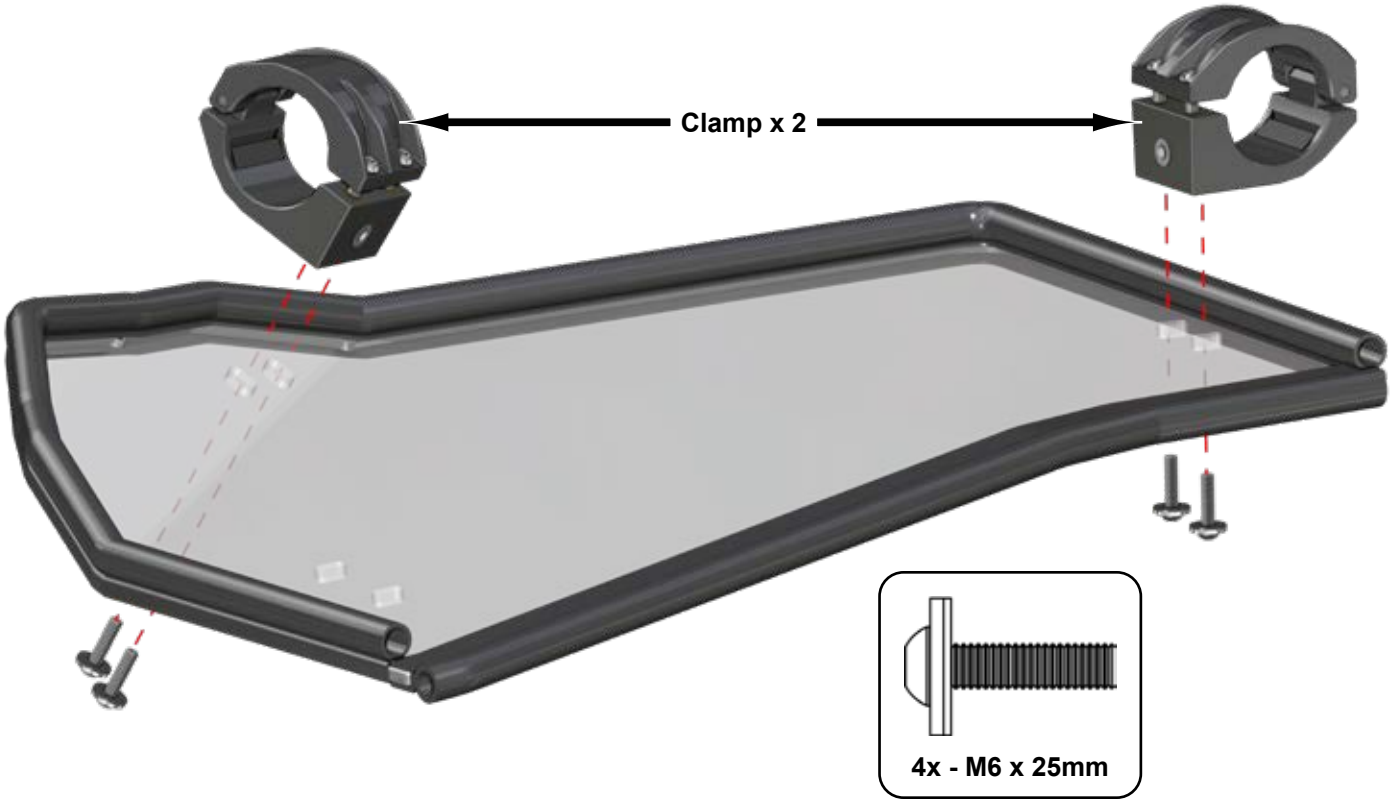

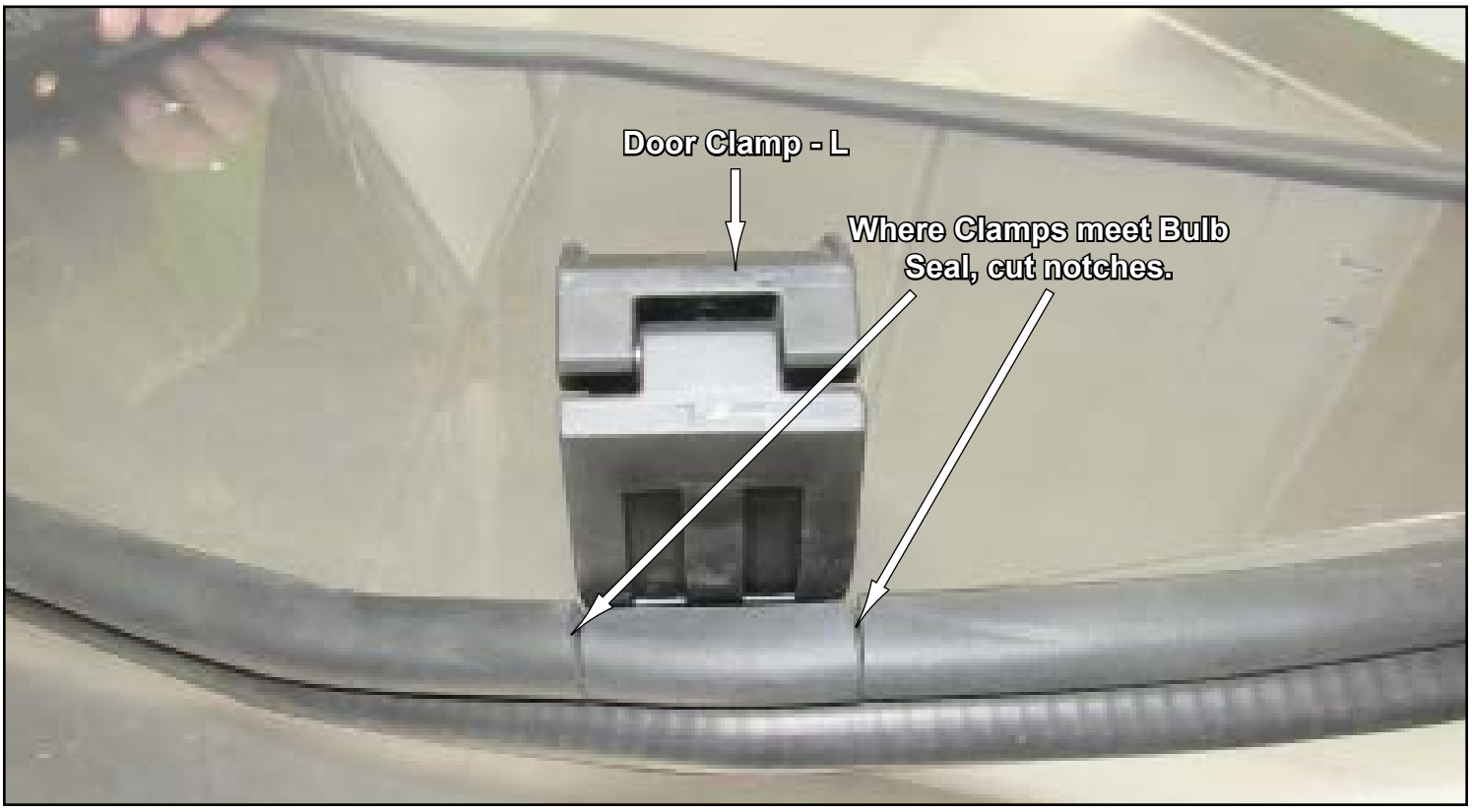


Remove Clamps and cut away
Bulb Seal material as shown.


Reinstall Clamps with hardware shown;
do not tighten.
4x - M6 x 25mm

- Open Clamps and install Left Windshield to Cage.
- Close and secure Clamps; do not tighten.



- Install Gasket to Inner Clamp - L.



- Install Outer - L and Inner Clamp - L to Left Window with hardware shown; do not tighten.

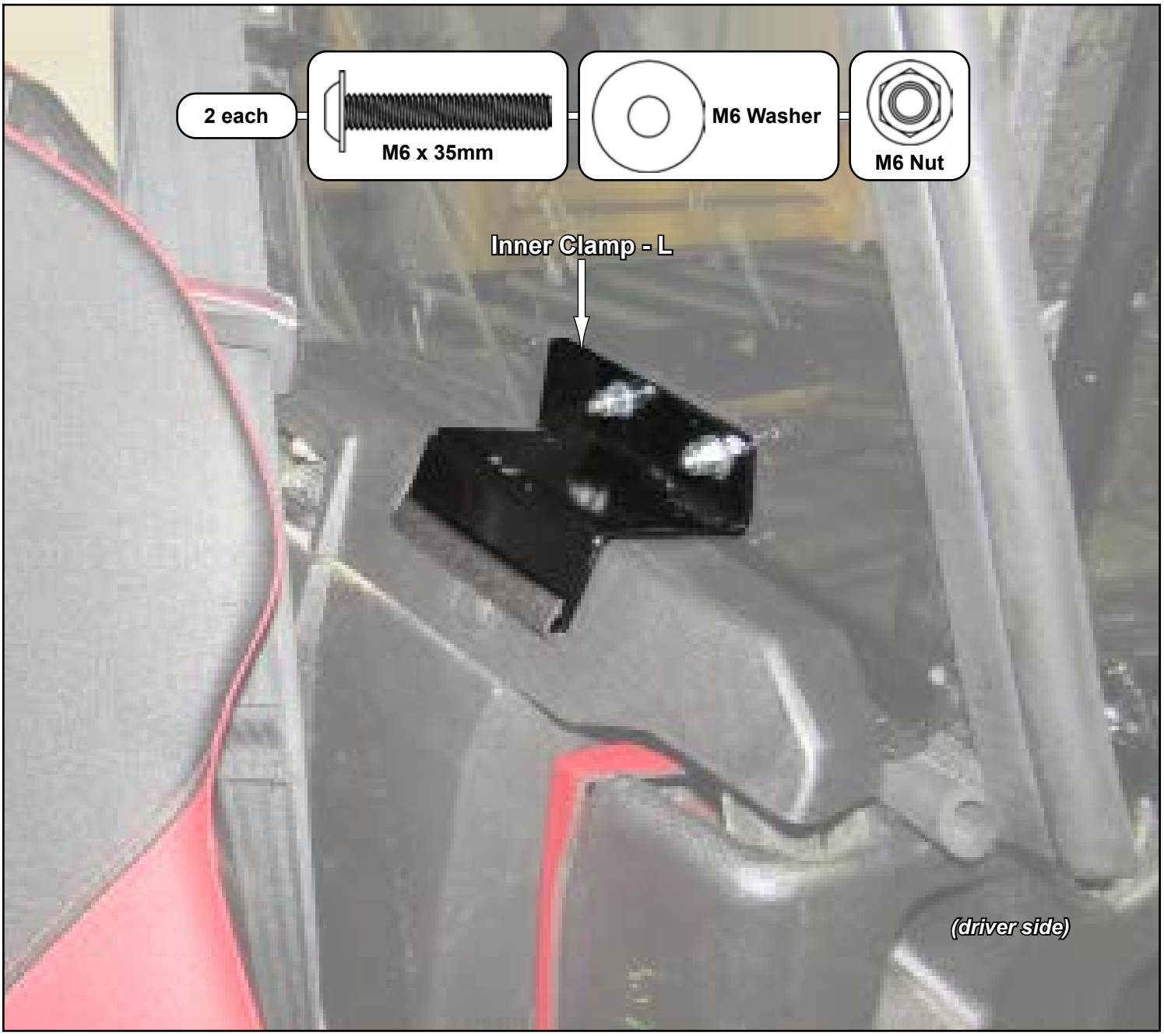

See following page for important alignment information.

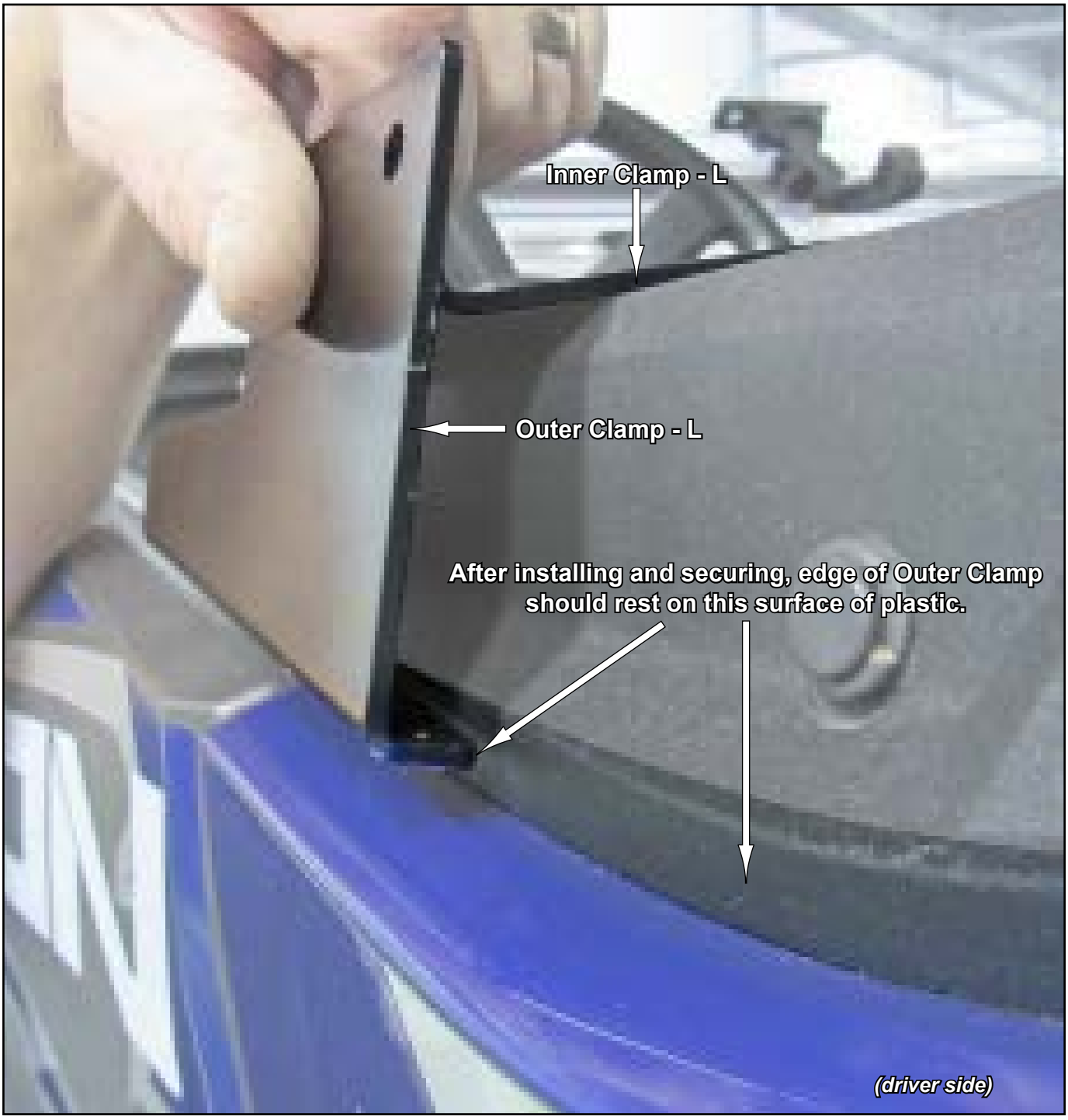
Inner Clamp - L
Outer Clamp - L
After installing and securing, edge of Outer Clamp should rest on this surface of plastic.
(driver side)

- Notch Bulb Seal around Clamps if Windhshield is installed.



- Open Clamps and install Left Windshield to Cage.
- Close and secure Clamps; do not tighten.



- Close and latch Left Door.
- Align Left Window to Left Door and machine.
- Tighten all hardware.


Seal
(passenger side)

- If Windshield is present, install Seal to Cage in locations shown.



- Repeat for opposite side.

- Install Mirror to Left Door; tighten hardware.



repeat steps for opposite Door

- Use an 8mm wrench and remove installed Mounts from Mirrors. Discard Mounts and hardware.

