2753 Michigan Road • Madison, Indiana 47250 • 855-743-3427

INSTALLATION INSTRUCTIONS

Half Doors: for CFMOTO UFORCE 1000

- Do not discard packaging until product has been successfully installed.

Item	Description
U	Door - R
V	Filler Plate x 2
W	Door - L

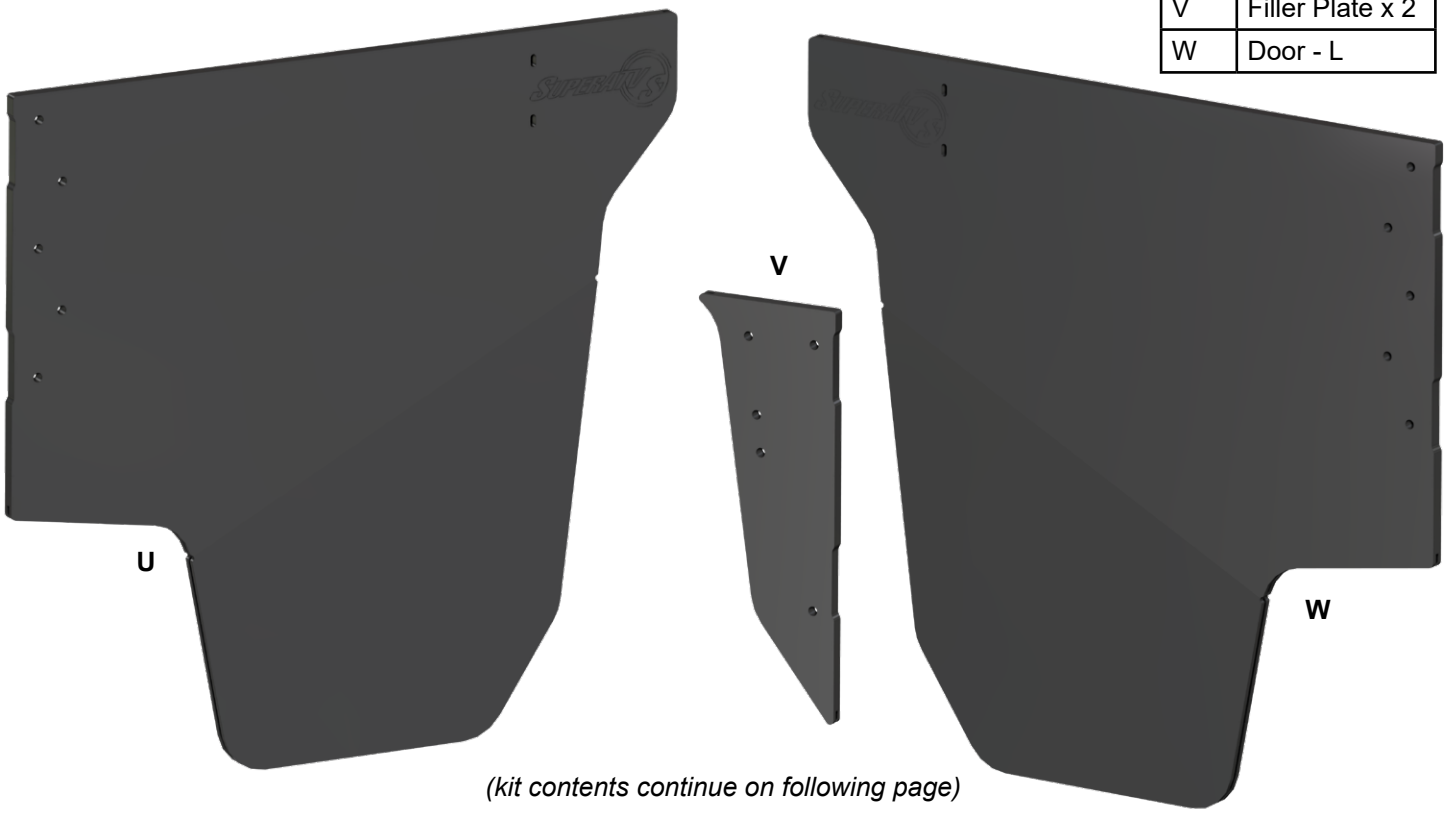

(kit contents continue on following page)

Liability Statement

SuperATV's® products are designed to best fit user's ATV/UTV under stock conditions. Adding, modifying, or fabricating any factory or aftermarket parts will void any warranty provided by SuperATV® and is not recommended. SuperATV's® products could interfere with other aftermarket accessories. If user has aftermarket products on machine, contact SuperATV® to verify that they will work together.

Although SuperATV® has thousands of satisfied customers, user should be aware that installing lift kits, long travel, or suspension kits, tires, etc. will change the ride of machine and may increase maintenance and part wear. Operating any off-road machine while, or after, consuming alcohol and/or drugs increases risk of bodily harm or death. No warranty or representation is made as to this product's ability to protect user from severe injury or death. SuperATV® urges operators and occupants to wear a helmet and appropriate riding gear at all times.

By purchasing and installing SuperATV® products, user agrees that should damages occur, SuperATV® will not be held responsible for loss of time, use, labor fees, replacement parts, or freight charges. SuperATV®, nor any 3rd party, will not be held responsible for any direct, indirect, incidental, special, or consequential damages that result from any product purchased from SuperATV®. The total liability of seller to user for all damages, losses, and causes of action, if any, shall not exceed the total purchase price paid for the product that gave rise to the claim.

SuperATV® will warranty only parts provided by SuperATV®. Any damage or problems with OEM housings, bearings, seals, or other manufacturers' products will not be covered by SuperATV®. SuperATV® parts and products are not warrantied if item was not installed properly, misused, or modified.

Installing, adding, modifying, or fabricating any factory or aftermarket product to your ATV/UTV may violate certain local, state, and federal laws. Be advised that laws vary depending on town, city, county, state, etc. Use of certain products on public streets, roads, or highways may be in violation law. The Buyer is solely and exclusively legally and personally responsible for any violation of the law by the installation or use of the product. You must abide by all local, state, and federal laws, including but not limited to vehicle safety, traffic laws, and ordinances. It is your responsibility to know the laws and how they apply to you.

The Buyer is responsible to fully understand the capability and limitations of his/her vehicle according to manufacturer specifications, warnings and instructions and agrees to hold SuperATV® harmless from any damage resulting from failure to adhere to such specifications, warnings and/ or instructions. The Buyer is also responsible to obey all applicable federal, state, and local laws and ordinances when operating his/her vehicle while using this product, and the Buyer agrees to hold SuperATV® harmless from any violation thereof.

Need help with your installation?

sales@superatv.com

www.superatv.com

1-855-743-3427

8:00am - 8:00pm EST M-Th
8:00am - 7:00pm EST Friday
9:00am - 2:00pm EST Saturday

Read instructions and view illustrations before beginning.

Thank You For Choosing SUPERATV.COM®

© 2025 SuperATV.com®. All Rights Reserved.

(kit contents continued)

Item	Description
A	Internal Mount - R
B	Striker Mount - R
C	Latch Plate - R
D	Latch - R
E	Front Frame Upper Mount - R
F	Lower Frame Mount - R
G	Hinge Bracket - R
H	Door Mount - R
J	Latch Mount x 2

Item	Description
K	Strap x 2
L	Front Frame Upper Mount - L
M	Latch - L
N	Latch Plate - L
P	Striker Mount - L
Q	Internal Mount - L
R	Door Mount - L
S	Hinge Bracket - L
T	Lower Frame Mount - L

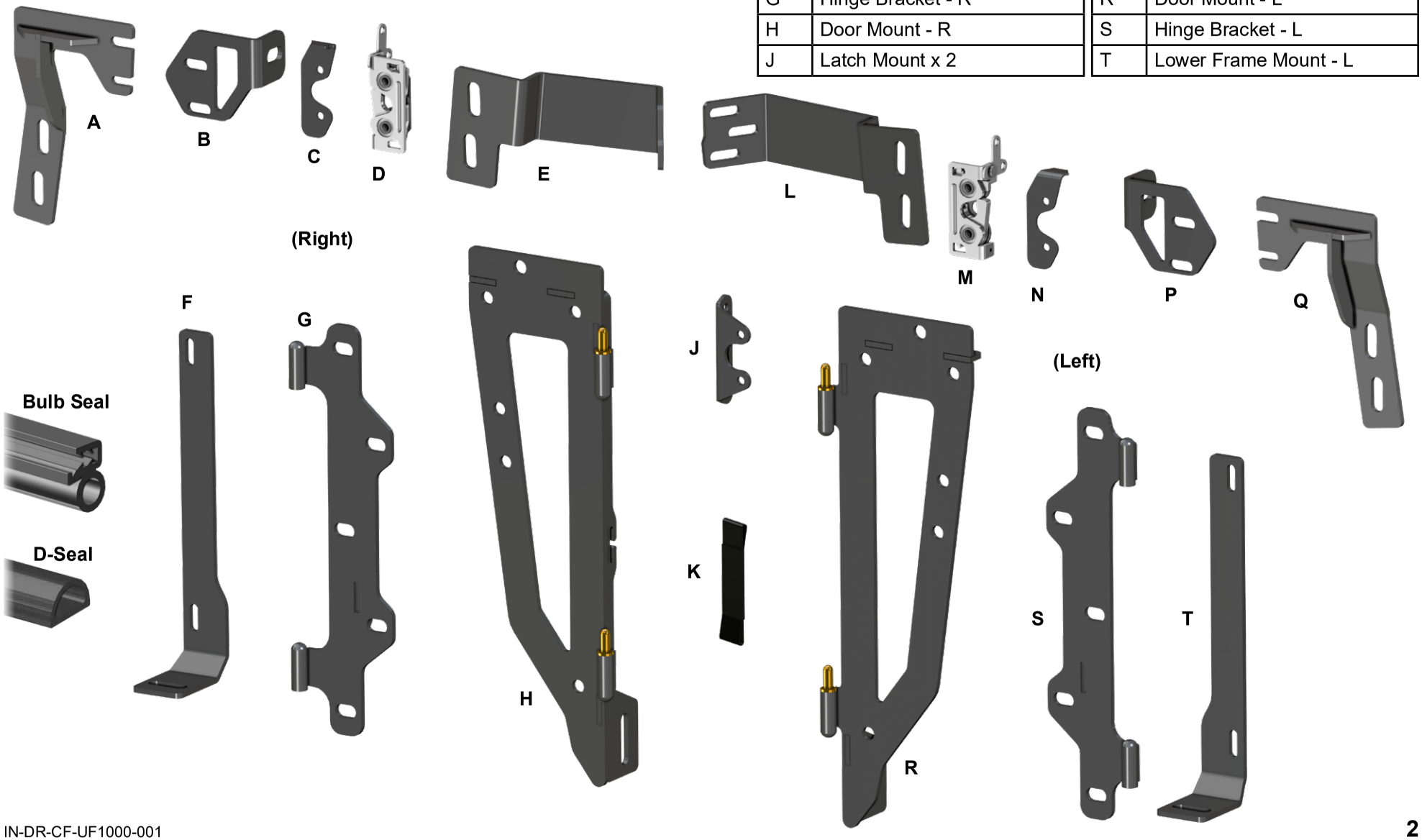

remove components / hardware shown; do not discard



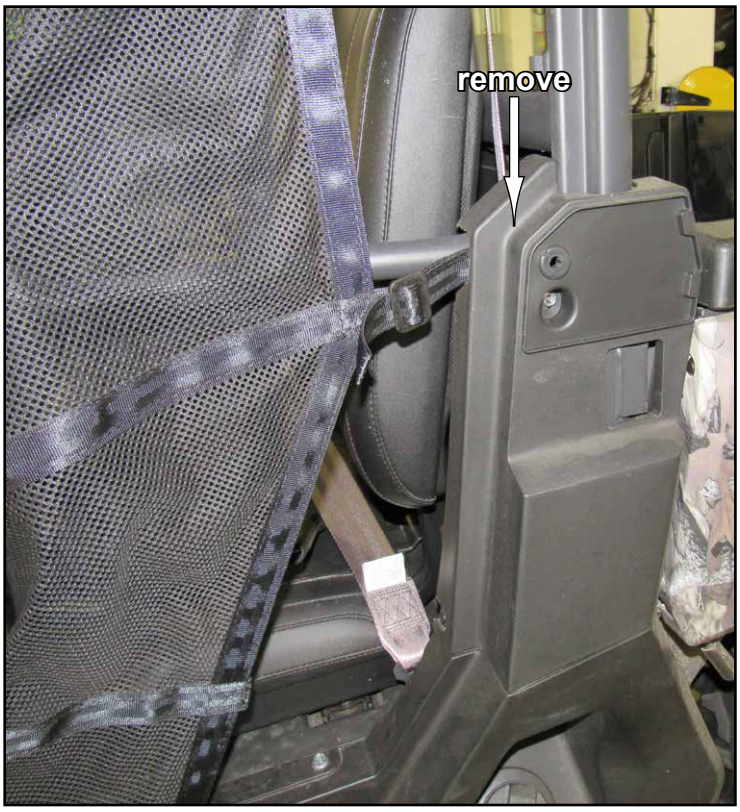





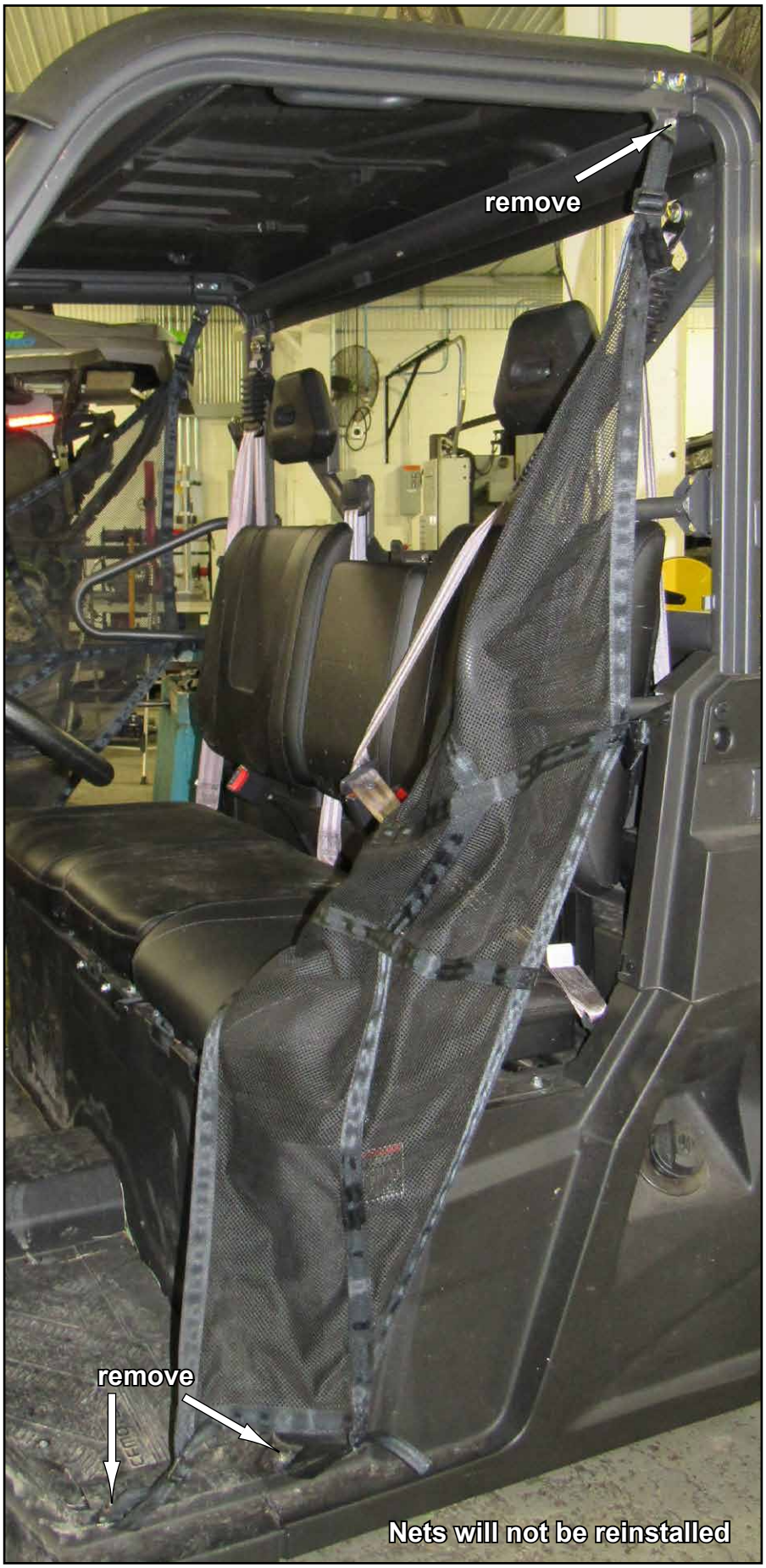
remove
remove
Nets will not be reinstalled

KEEP HARDWARE SNUG BUT NOT COMPLETELY TIGHT

- Install Striker Mount - L (P) to machine with hardware shown.
- Install Striker Bolt and hardware shown to Striker Mount- L (P).

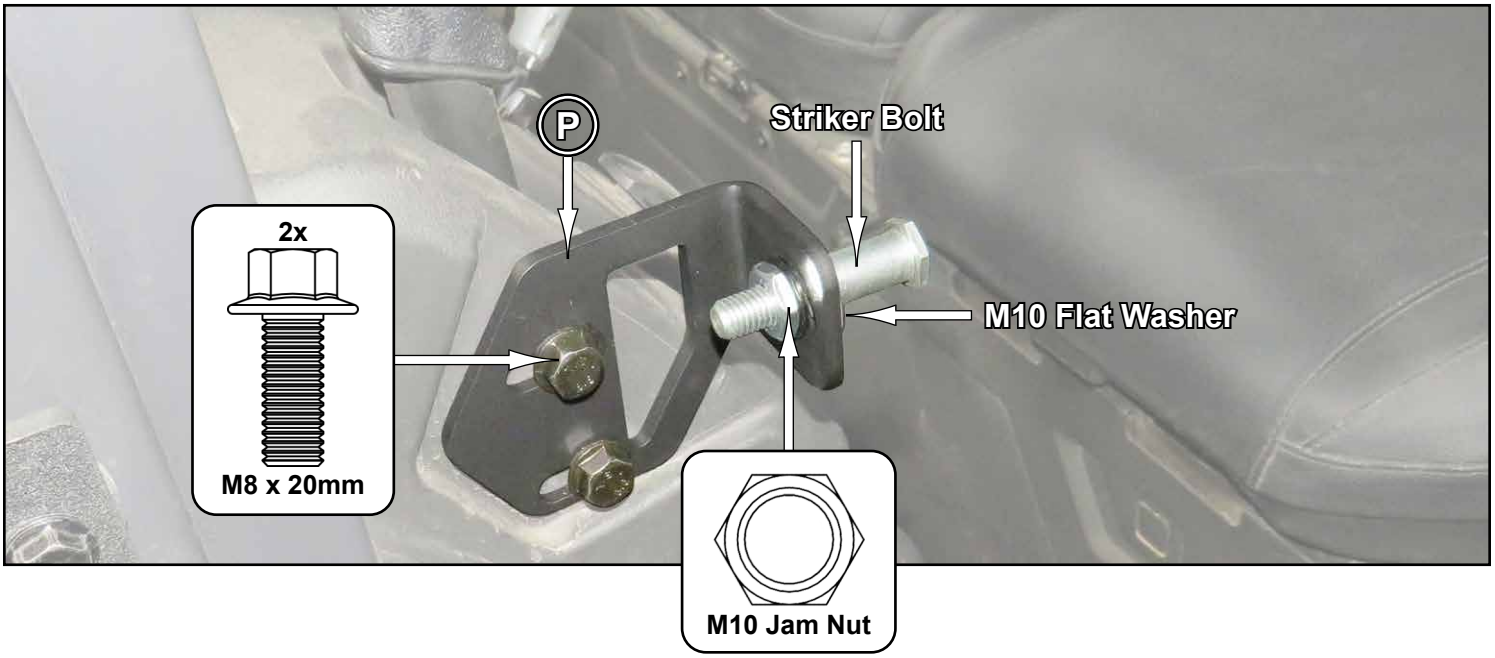



do not tighten hardware completely unless noted (driver side installation shown)

KEEP HARDWARE SNUG BUT NOT COMPLETELY TIGHT

- Install Front Frame Upper Mount - L (L) with hardware shown.

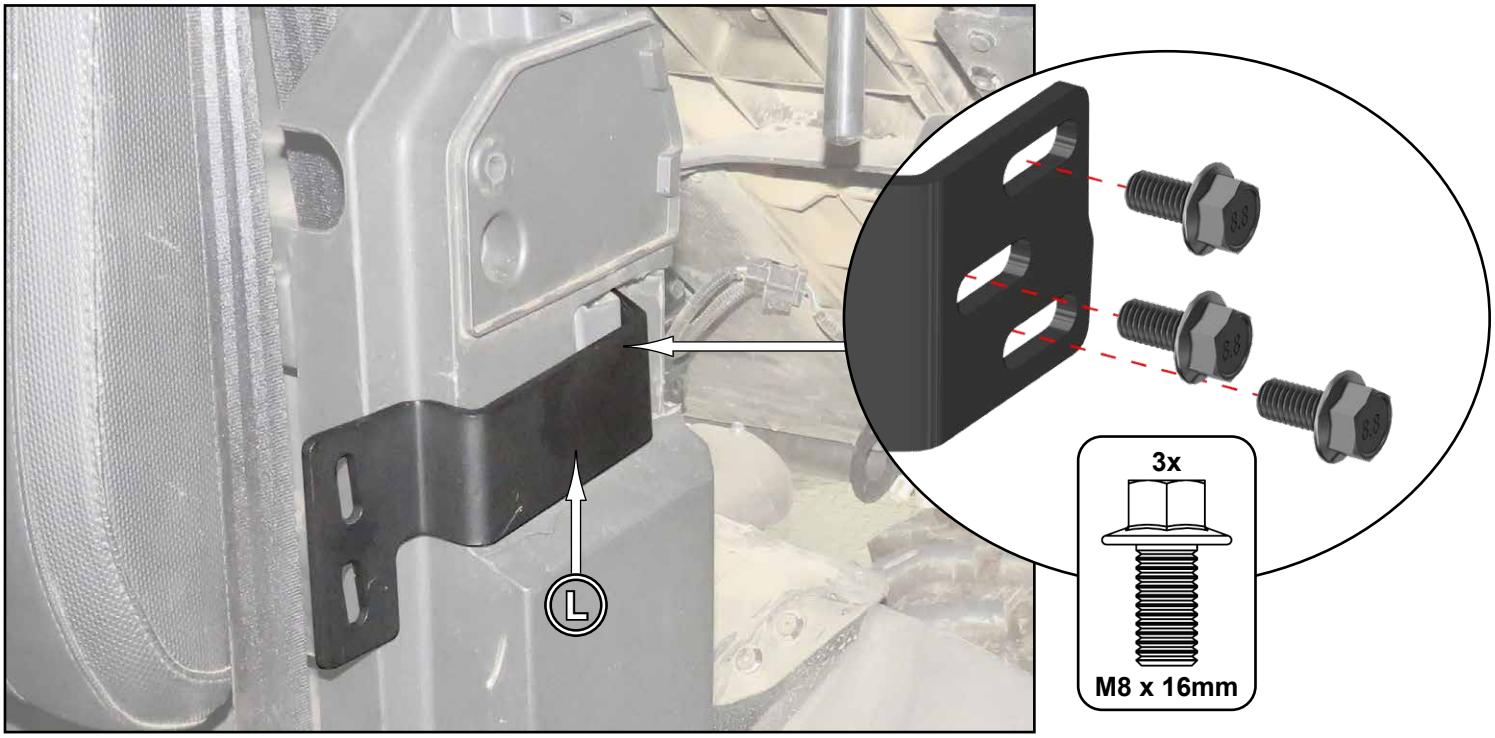

- Install Internal Mount - L (Q) with hardware shown.

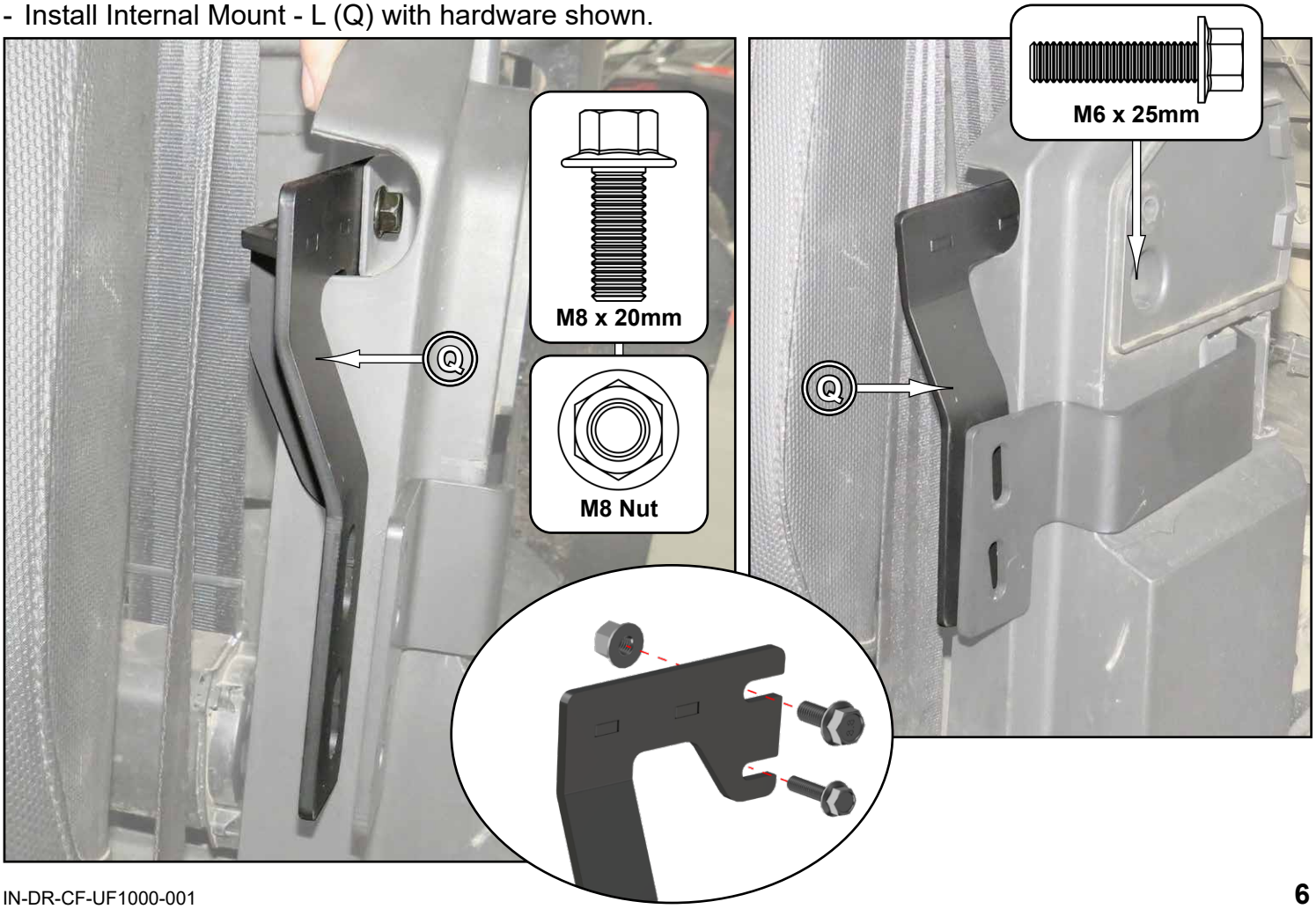

- Install Door Mount - L (R) to Filler Plate (V) with hardware shown; tighten.
- Install Seals to locations shown.

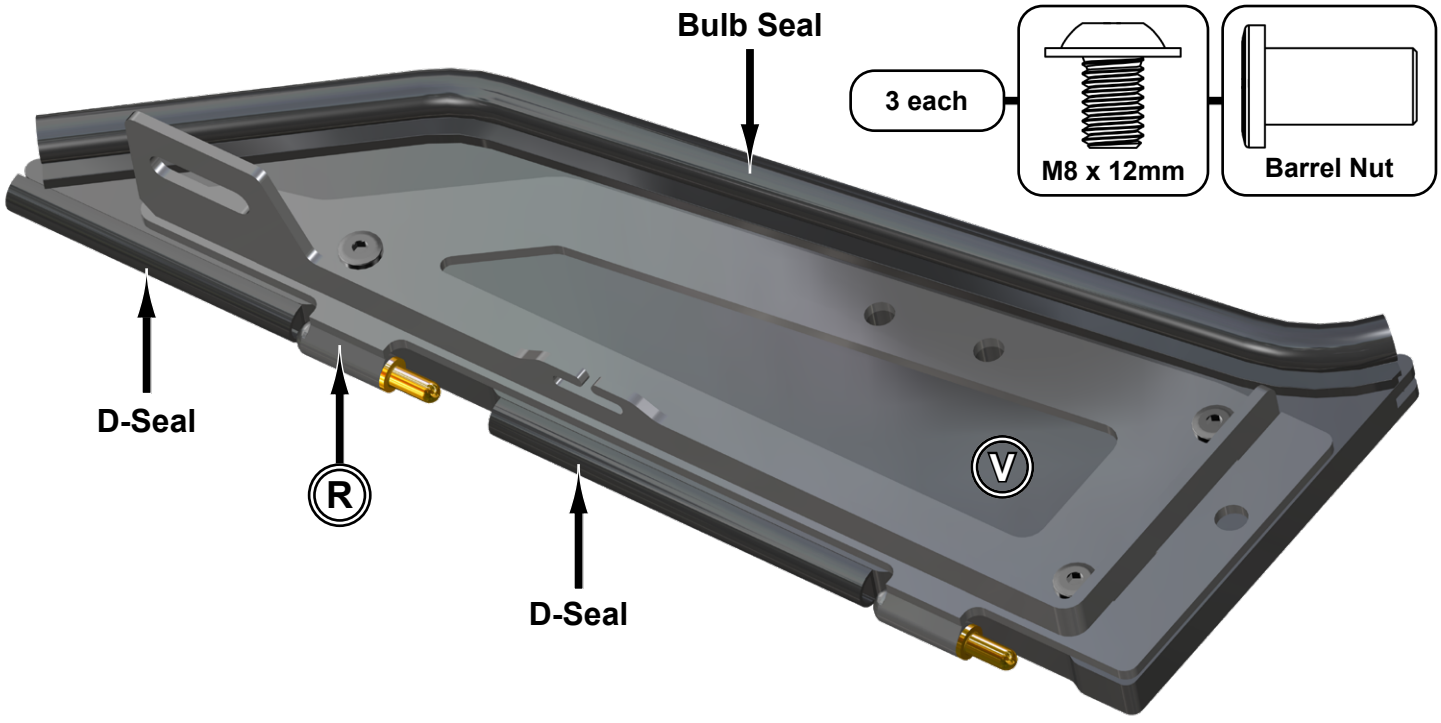

- Install Bulb Seal to locations shown on Door - L (W); set aside.



- Install Filler Plate assembly to Front Frame Upper Mount - L (L) with hardware shown; tighten.

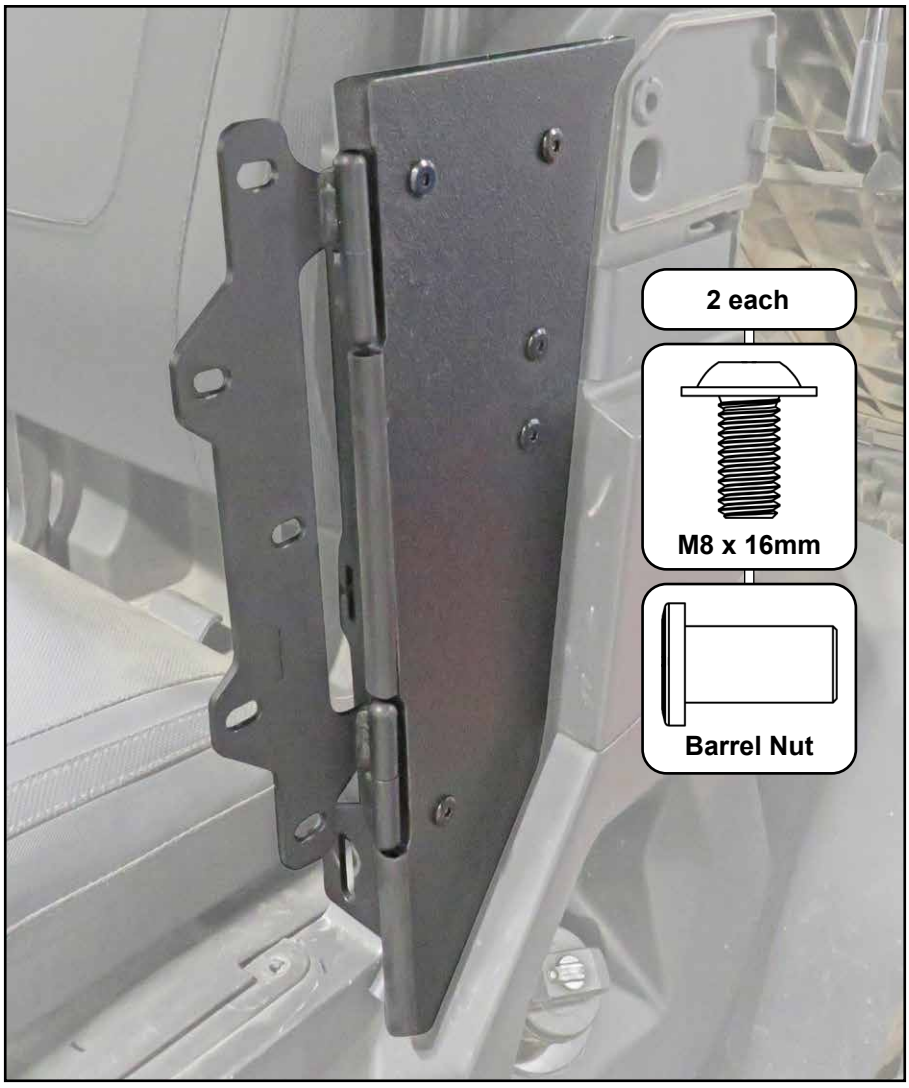

- Install Lower Frame Mount - L (T) to machine and Door Mount - L (R) with hardware shown; do not tighten.

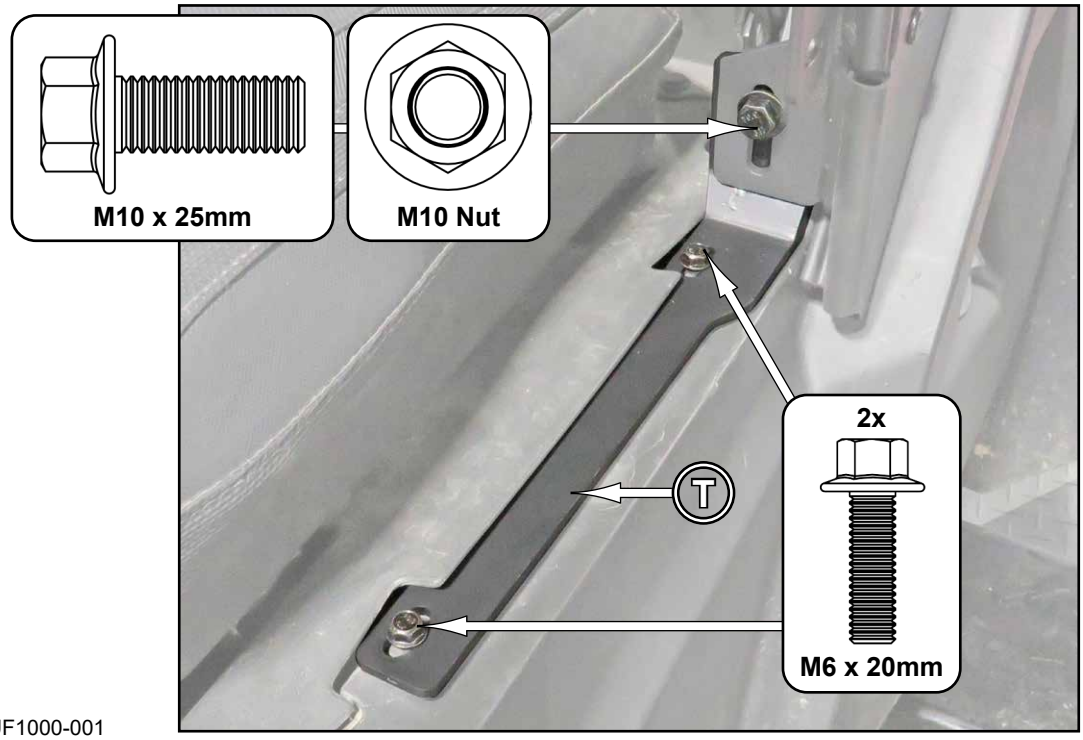

- Install Hinge Bracket - L (S) to Door - L (W) with hardware shown; do not tighten.

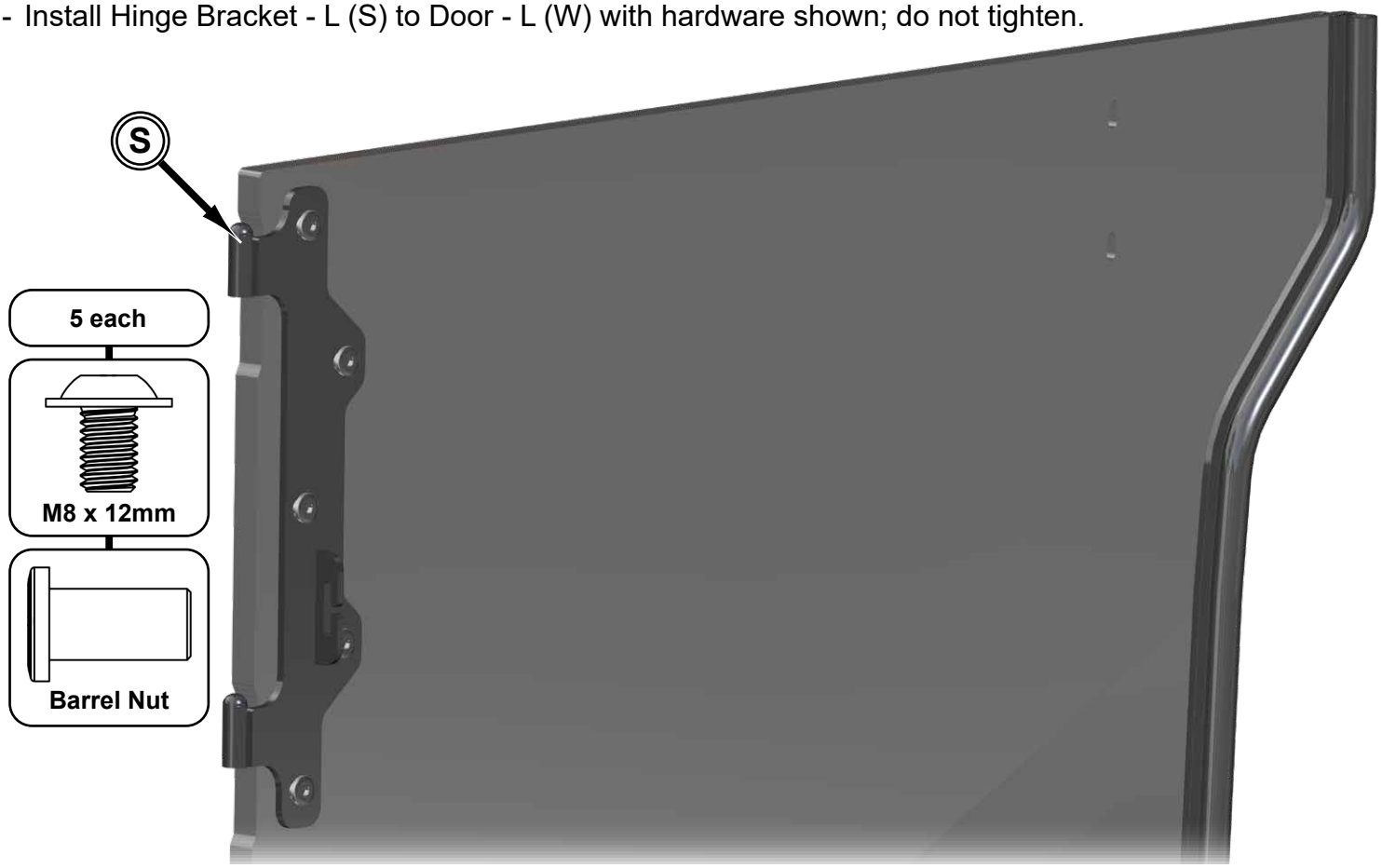

- Install Door - L (W) onto Hinges on Door Mount - L (R).



- Join Latch Plate - L (N), Latch Mount (J), and Latch - L (M) with hardware shown; tighten.
- Install Knob to Latch - L (M) with hardware shown; tighten.

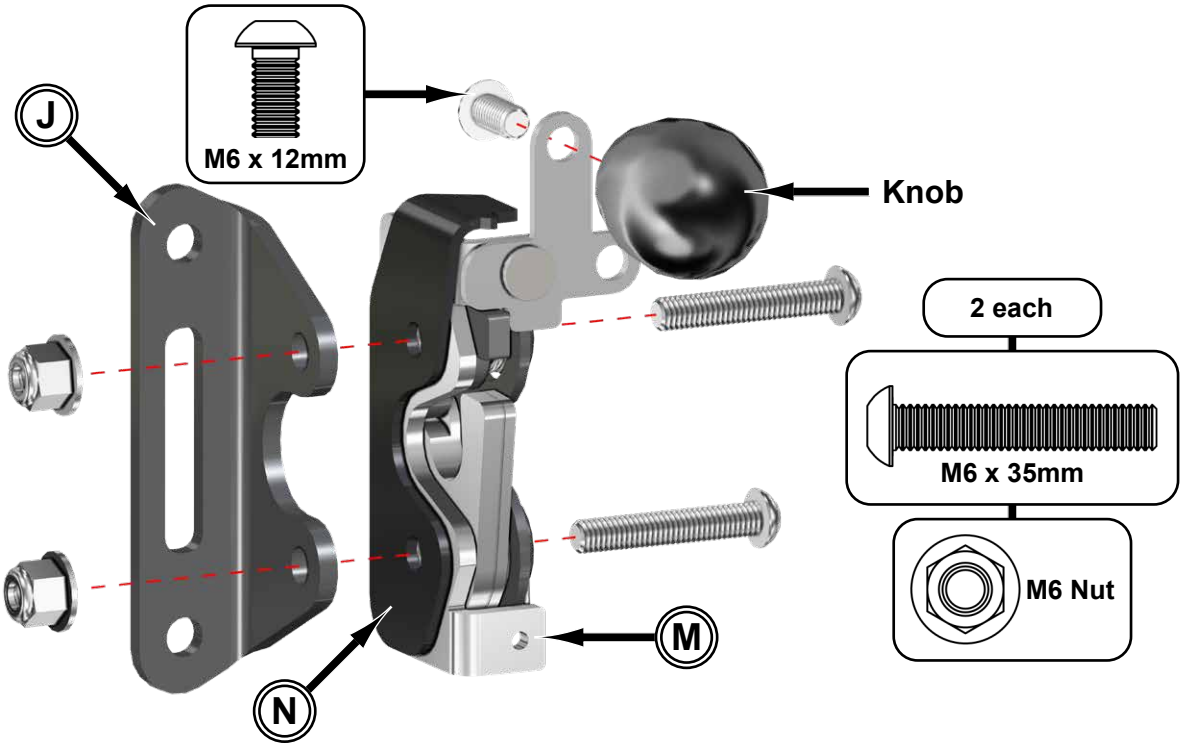

- Install Latch assembly to Door with hardware shown; tighten.

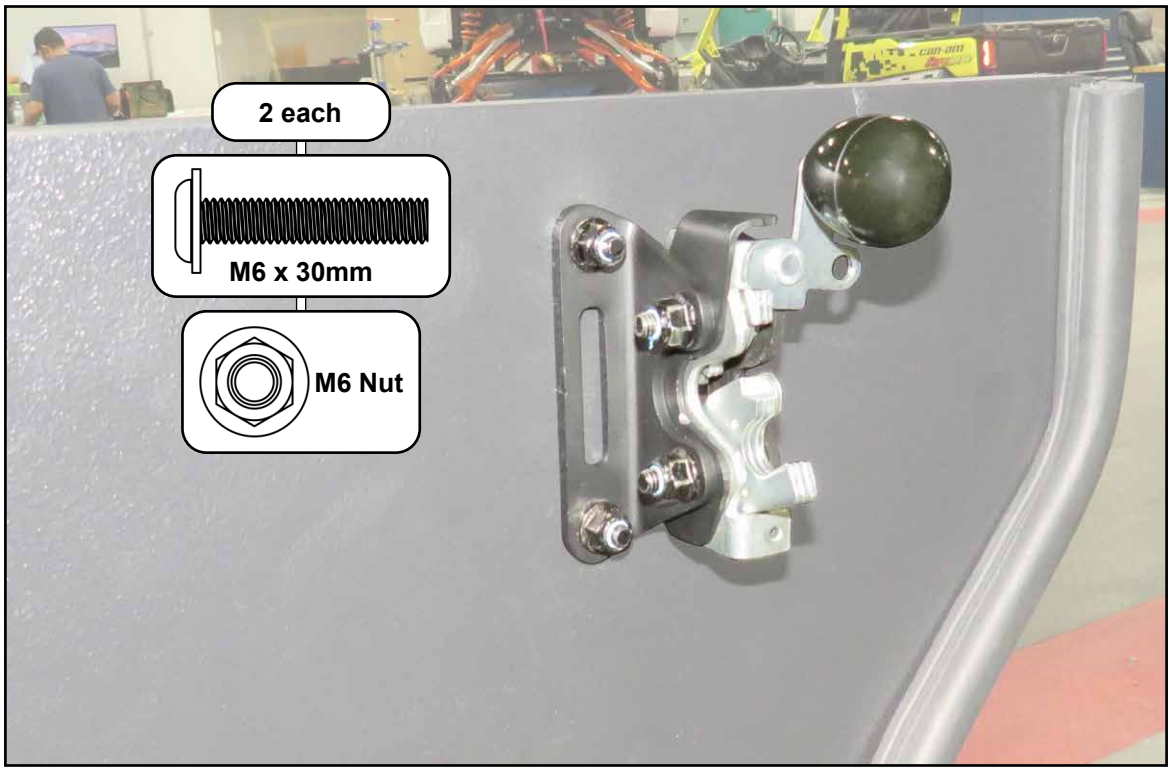

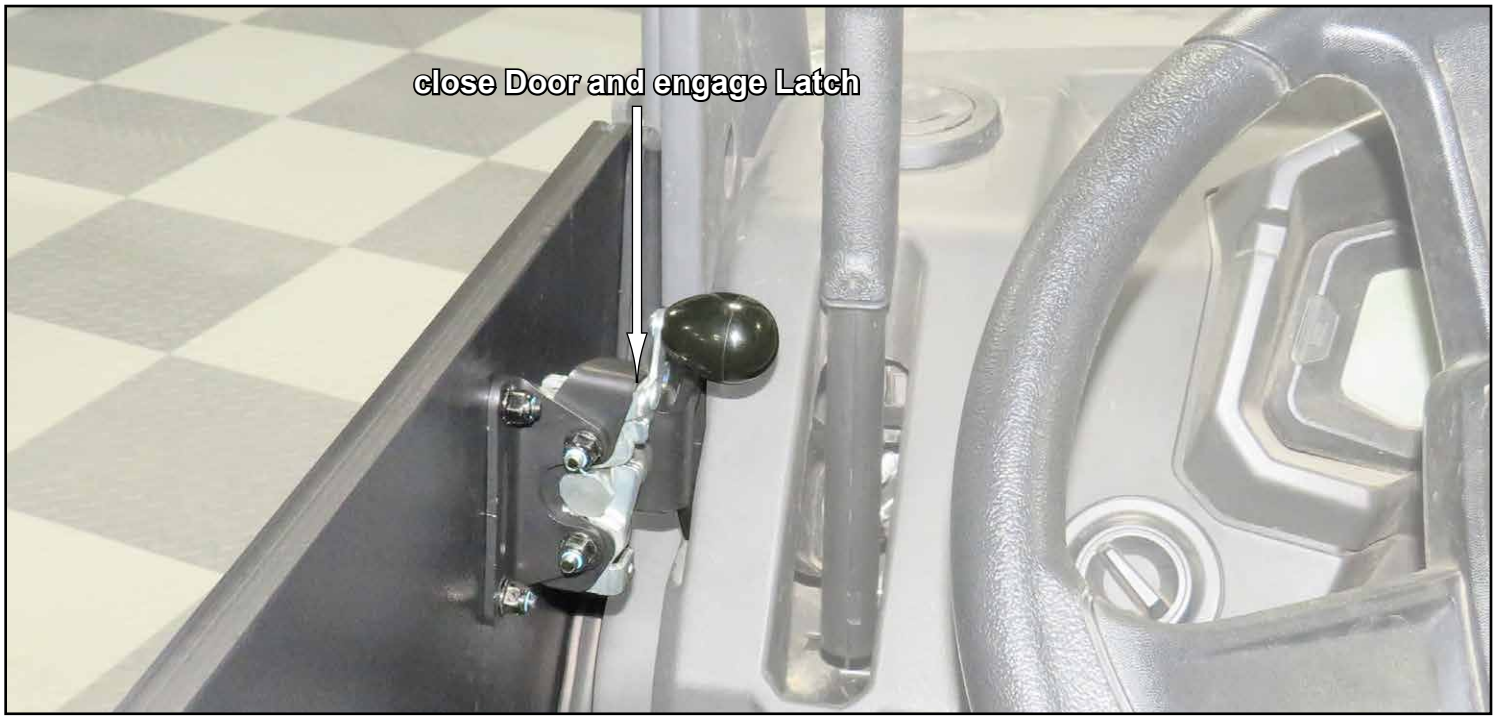

align Door to machine and tighten all hardware completely



- Install Strap (K) to Door Mount - L (R) and Hinge Bracket - L (S).

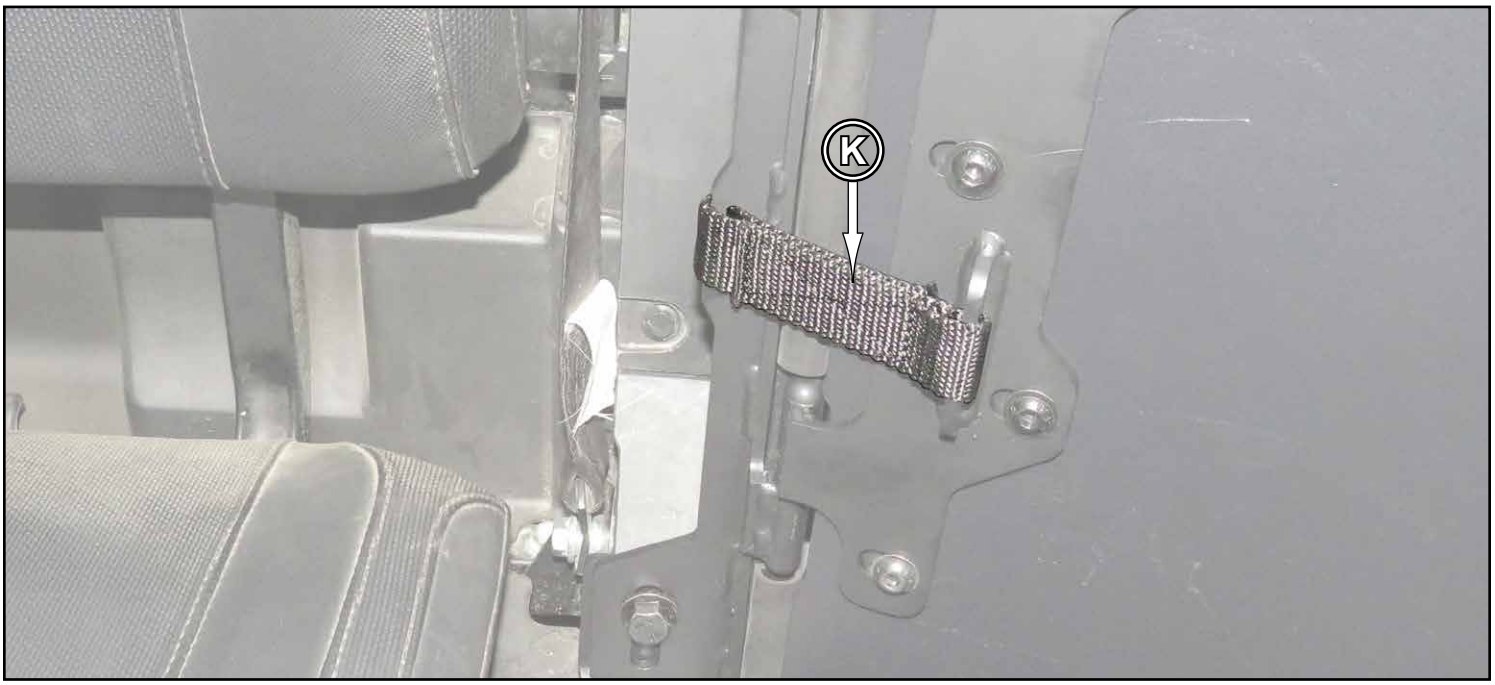

- Repeat steps for passenger side installation.
- Reinstall applicable stock components.