2753 Michigan Road • Madison, Indiana 47250 • 855-743-3427

INSTALLATION INSTRUCTIONS

Flip Windshield: for CFMOTO UFORCE 1000

- Do not discard packaging until product has been successfully installed.
- SuperATV does not recommend keeping Windshield installed while transporting on an open air trailer.
- This item is not returnable if the protective film has been removed.
- Test fit to the cage to confirm fitment before removing film.

Windshield Cleaning:

- Do not use Rain-X®, Plexus® or any other protector, wax, or polish.
- Do not use window cleaning fluids (Windex, 409, etc) or any solvents (gasoline, denatured alcohol, acetone, etc).
- Never use abrasive cleaners, abrasive pads, or gritty cloths.
- Do not use a windshield wiper blade or install a motorized windshield wiper
- Never use razor blades, scrapers, squeegees, brushes, etc.

1. Thoroughly rinse Windshield to float off dirt and mud.
2. Using a soft cloth, or microfiber cloth, clean Windshield with warm water and a gentle detergent. Baby shampoo, rubbing alcohol, or hand washing soap can also be used.
3. To prevent water spots, use a chamois to blot Windshield dry.

Liability Statement

SuperATV's® products are designed to best fit user's ATV/UTV under stock conditions. Adding, modifying, or fabricating any factory or aftermarket parts will void any warranty provided by SuperATV® and is not recommended. SuperATV's® products could interfere with other aftermarket accessories. If user has aftermarket products on machine, contact SuperATV® to verify that they will work together.

Although SuperATV® has thousands of satisfied customers, user should be aware that installing lift kits, long travel, or suspension kits, tires, etc. will change the ride of machine and may increase maintenance and part wear. Operating any off-road machine while, or after, consuming alcohol and/or drugs increases risk of bodily harm or death. No warranty or representation is made as to this product's ability to protect user from severe injury or death. SuperATV® urges operators and occupants to wear a helmet and appropriate riding gear at all times.

By purchasing and installing SuperATV® products, user agrees that should damages occur, SuperATV® will not be held responsible for loss of time, use, labor fees, replacement parts, or freight charges. SuperATV®, nor any 3rd party, will not be held responsible for any direct, indirect, incidental, special, or consequential damages that result from any product purchased from SuperATV®. The total liability of seller to user for all damages, losses, and causes of action, if any, shall not exceed the total purchase price paid for the product that gave rise to the claim.

SuperATV® will warranty only parts provided by SuperATV®. Any damage or problems with OEM housings, bearings, seals, or other manufacturers' products will not be covered by SuperATV®. SuperATV® parts and products are not warrantied if item was not installed properly, misused, or modified.

Installing, adding, modifying, or fabricating any factory or aftermarket product to your ATV/UTV may violate certain local, state, and federal laws. Be advised that laws vary depending on town, city, county, state, etc. Use of certain products on public streets, roads, or highways may be in violation law. The Buyer is solely and exclusively legally and personally responsible for any violation of the law by the installation or use of the product. You must abide by all local, state, and federal laws, including but not limited to vehicle safety, traffic laws, and ordinances. It is your responsibility to know the laws and how they apply to you.

The Buyer is responsible to fully understand the capability and limitations of his/her vehicle according to manufacturer specifications, warnings and instructions and agrees to hold SuperATV® harmless from any damage resulting from failure to adhere to such specifications, warnings and/ or instructions. The Buyer is also responsible to obey all applicable federal, state, and local laws and ordinances when operating his/her vehicle while using this product, and the Buyer agrees to hold SuperATV® harmless from any violation thereof.

Need help with your installation?

sales@superatv.com

www.superatv.com

1-855-743-3427

8:00am - 8:00pm EST M-Th
8:00am - 7:00pm EST Friday
9:00am - 2:00pm EST Saturday

Read instructions and view illustrations before beginning.

Thank You For Choosing SUPERATV.COM®

© 2024 SuperATV.com®. All Rights Reserved.

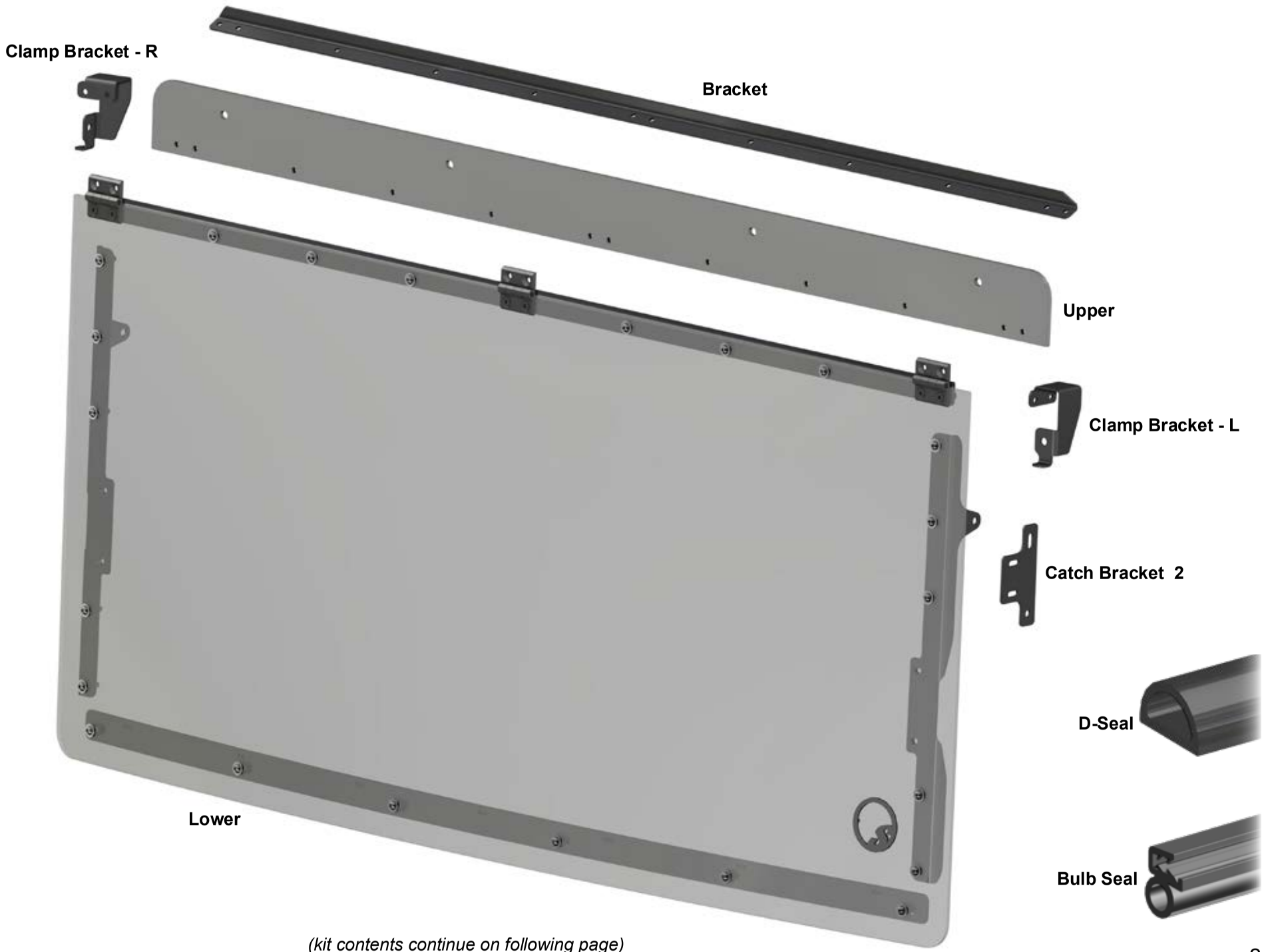

(kit contents continue on following page)

(kit contents continued)



Strut x 2



Clamp x 6



Clamp Seal x 12

(2) each

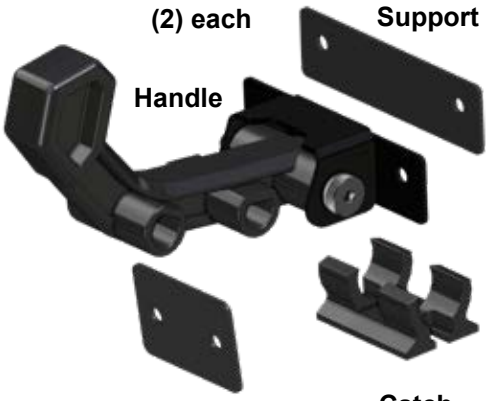

To ease installation, soak Bulb Seal in hot water before cutting or installing to increase flexibility.



- Install a continuous piece of Bulb Seal to perimeter of Lower as shown.

Bulb to always face towards vehicle.

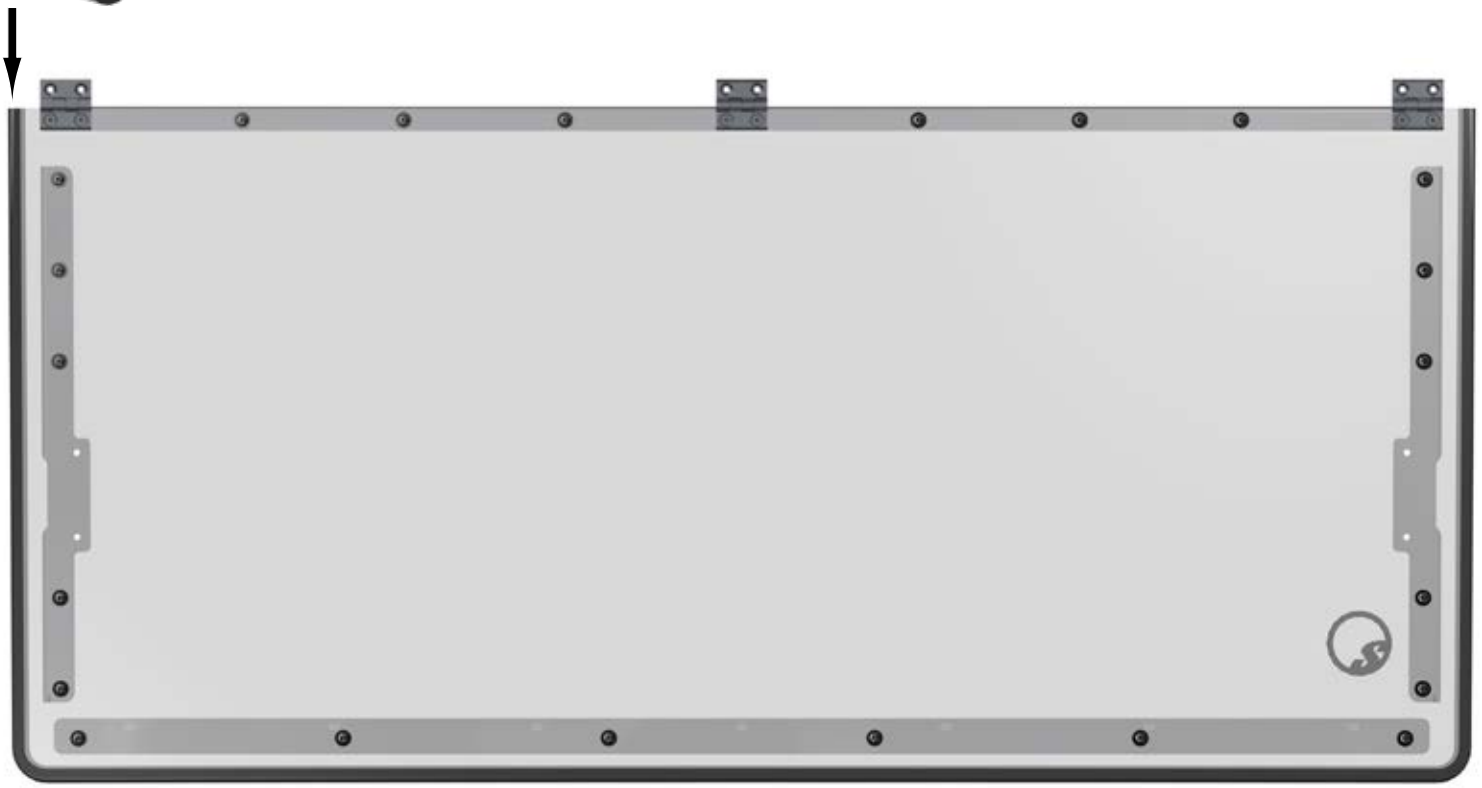

Install (2) pieces of Clamp Seal to Clamps in locations shown. Set aside.

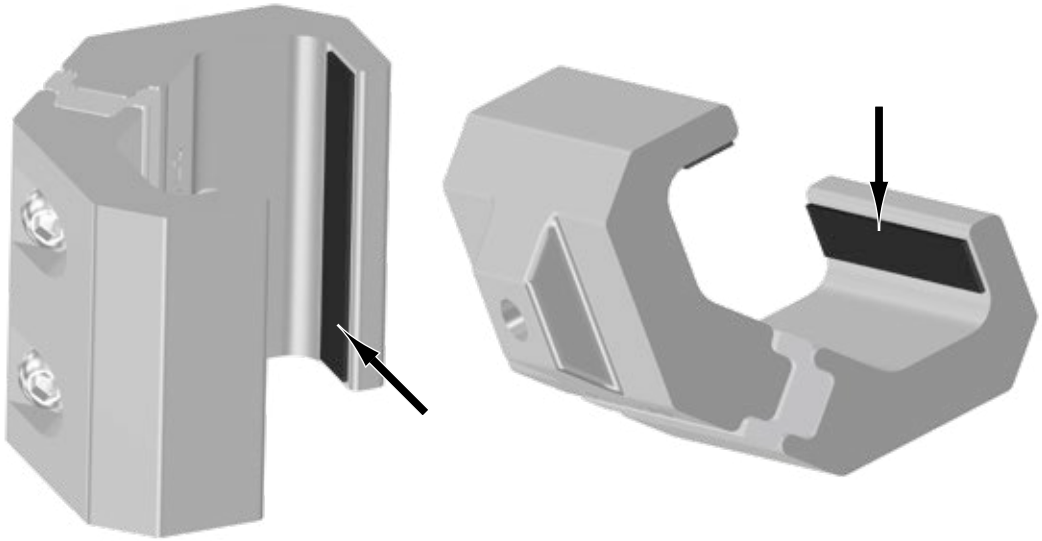

- Install a continuous piece of Bulb Seal to perimeter of Upper as shown.



Bulb to always face towards vehicle.



- Install Bracket to Upper with hardware shown; tighten.

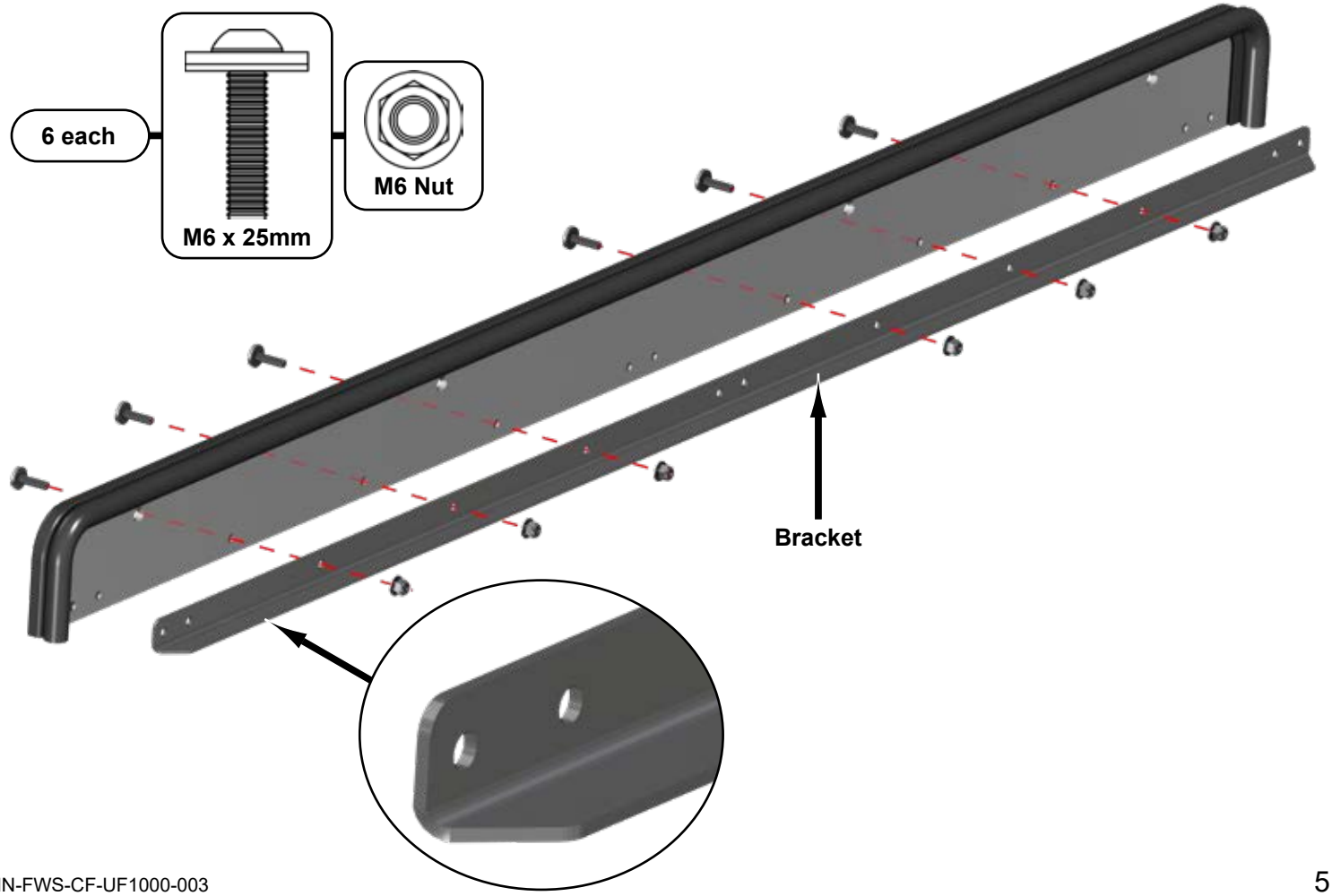

- Install D-Seal to Bracket as shown.



- Install Clamp Brackets and Upper to Lower with hardware shown; tighten.

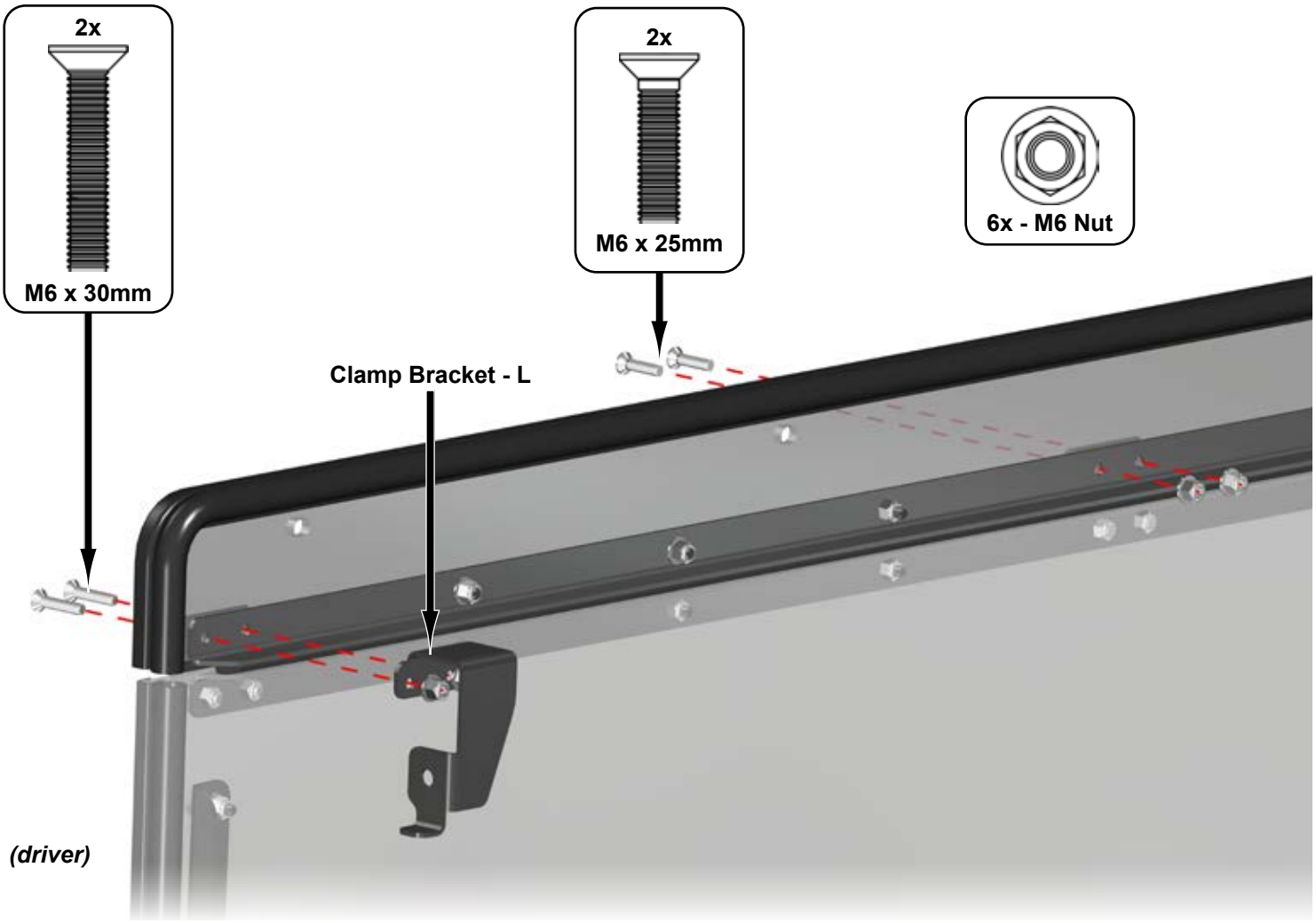

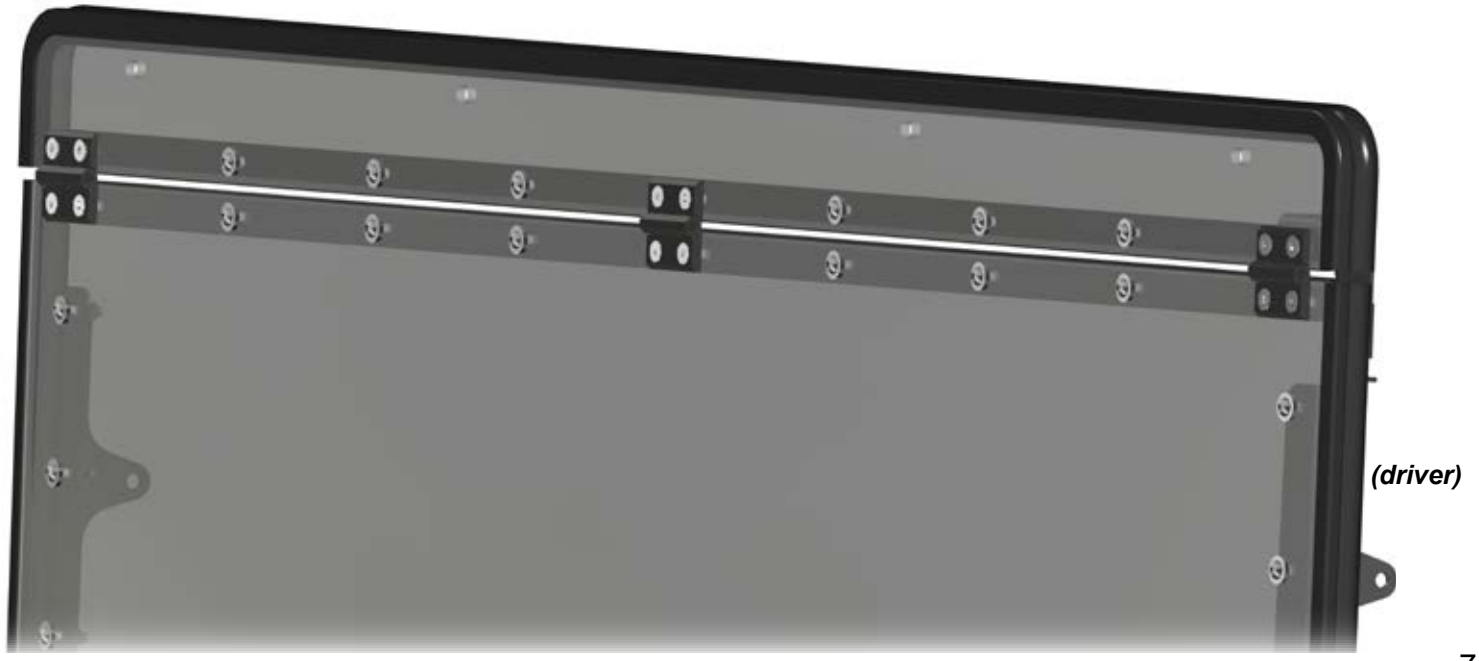

- Install Handle and Support to each end of Lower as shown; tighten.

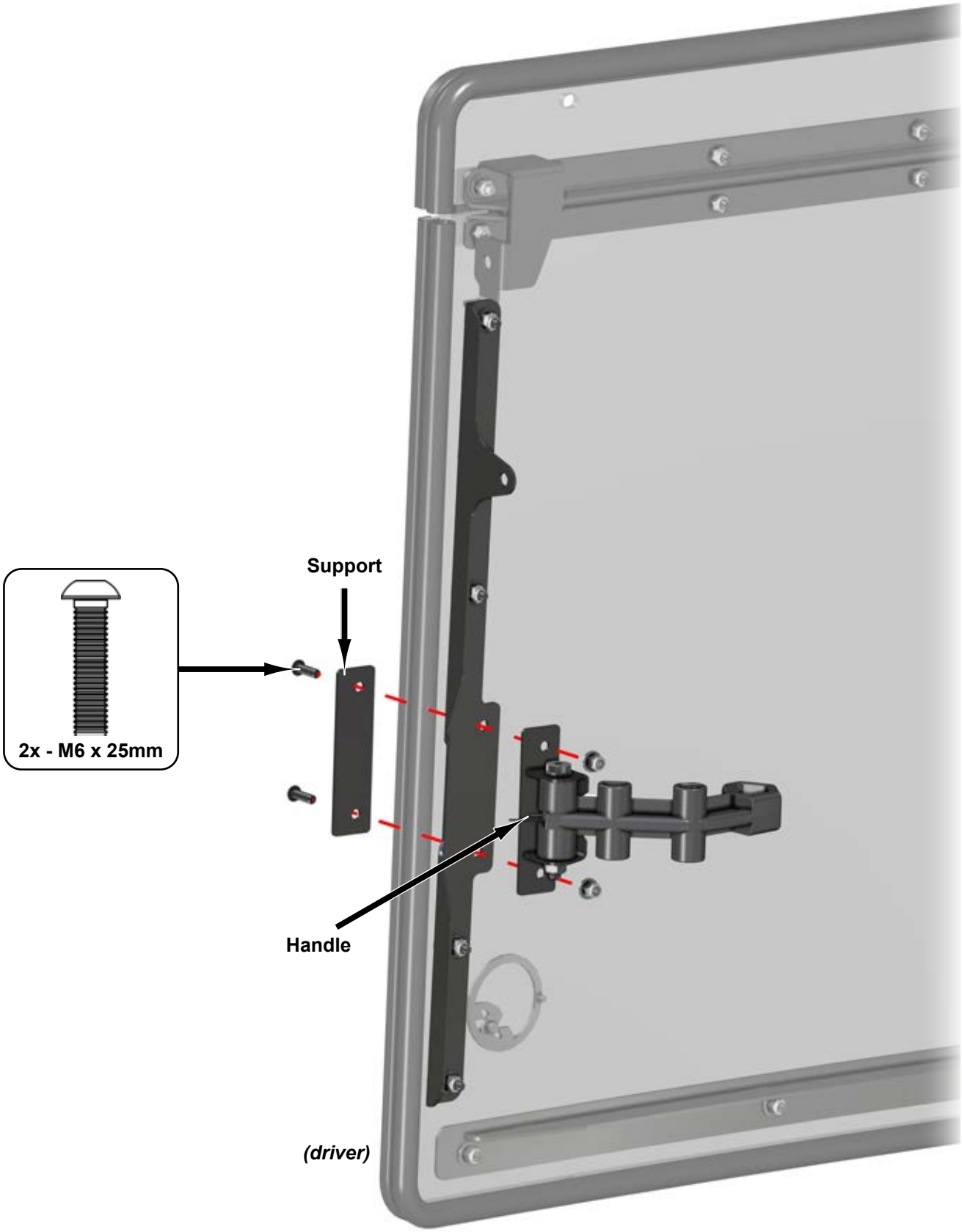

- Install Catch Bracket to Clamps with hardware shown; do not tighten.
- Separate Clamps and install Spacers.

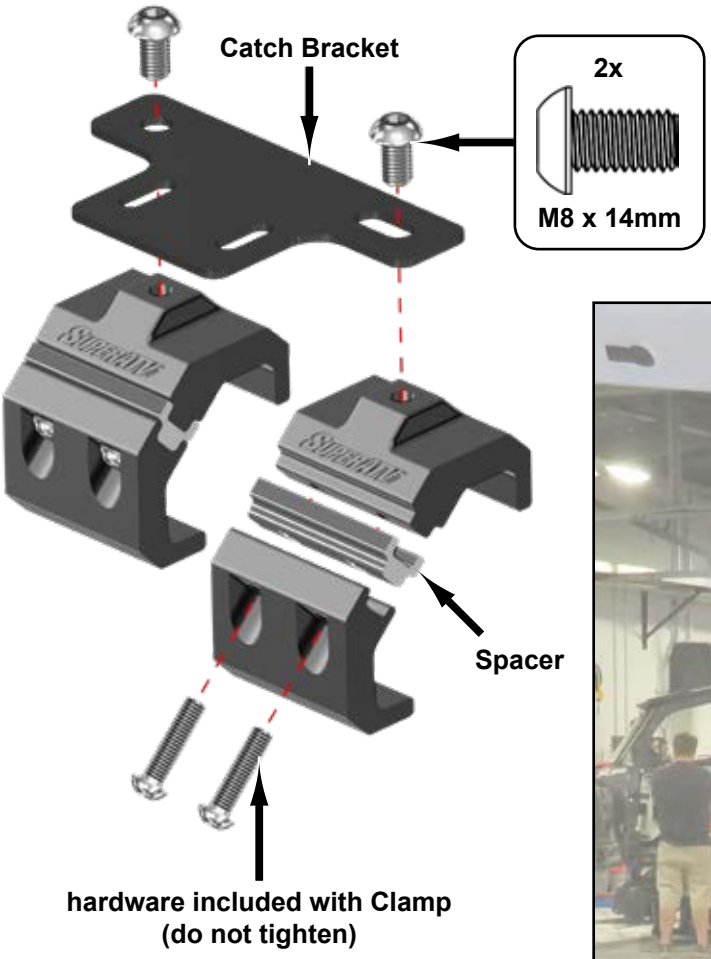

- Install Catch Bracket assembly and Clamp to Cage; do not tighten.
- Repeat for passenger side.



- Install Catches to Catch Brackets with hardware shown; do not tighten.

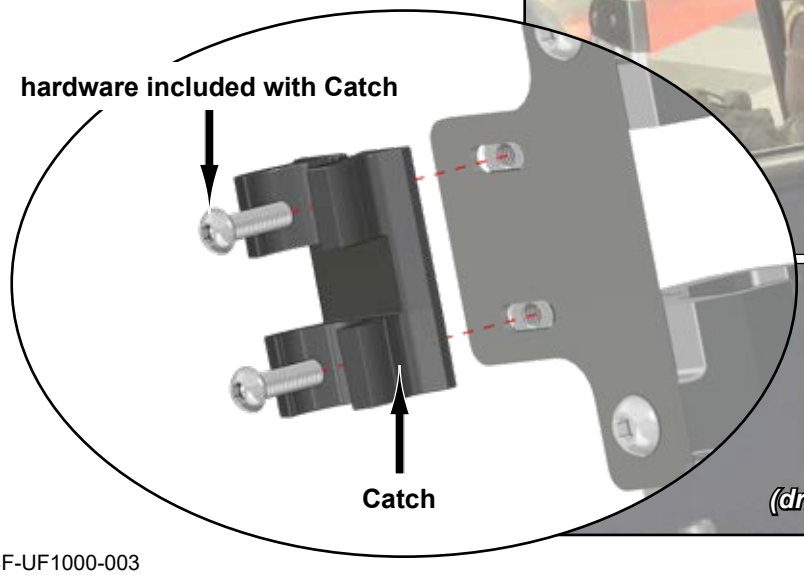

extra hands will make installation easier

- Place Windshield onto machine.



- Secure Upper to Frame with hardware shown; tighten.

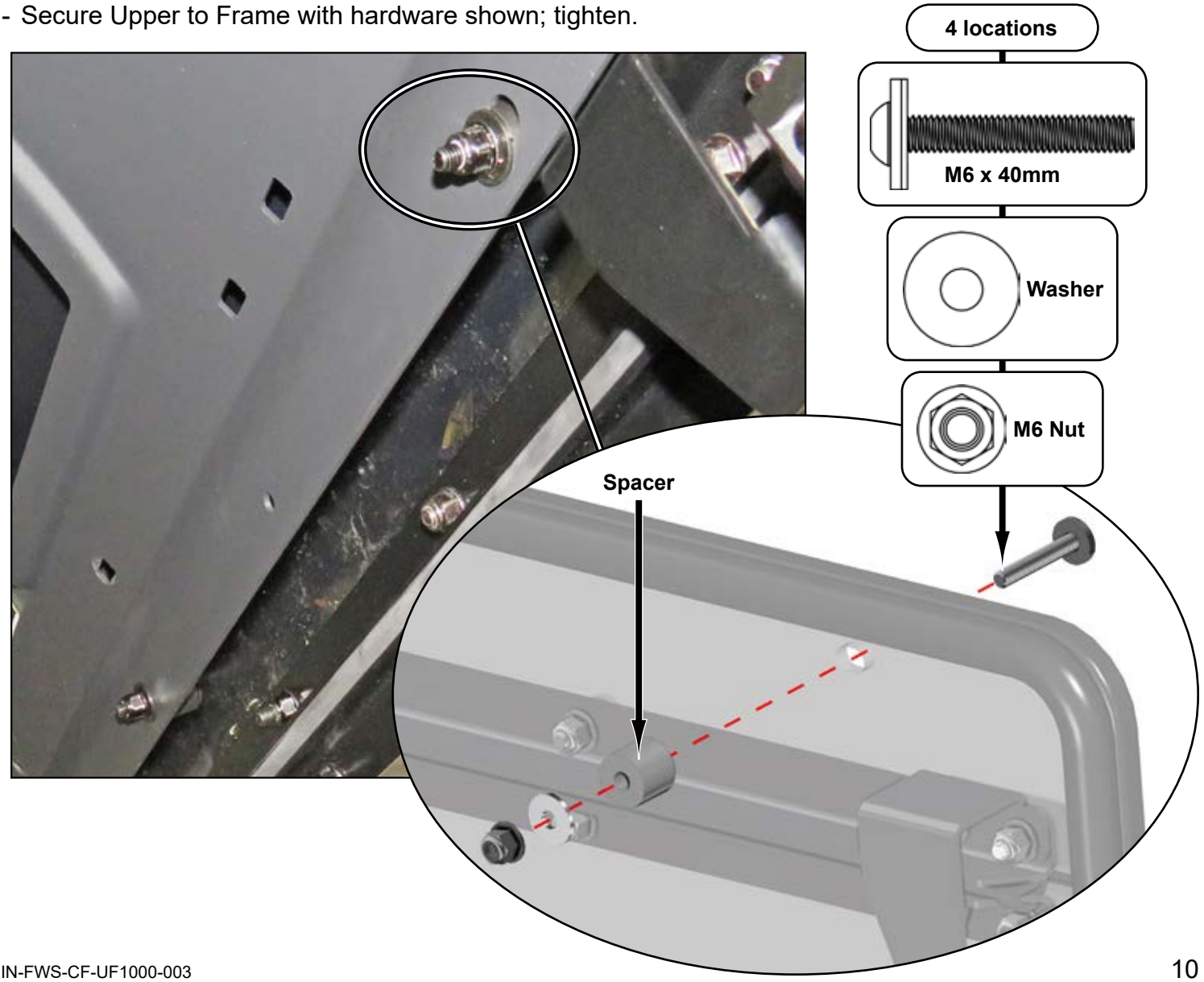

- Install Strut with hardware shown; tighten hardware.

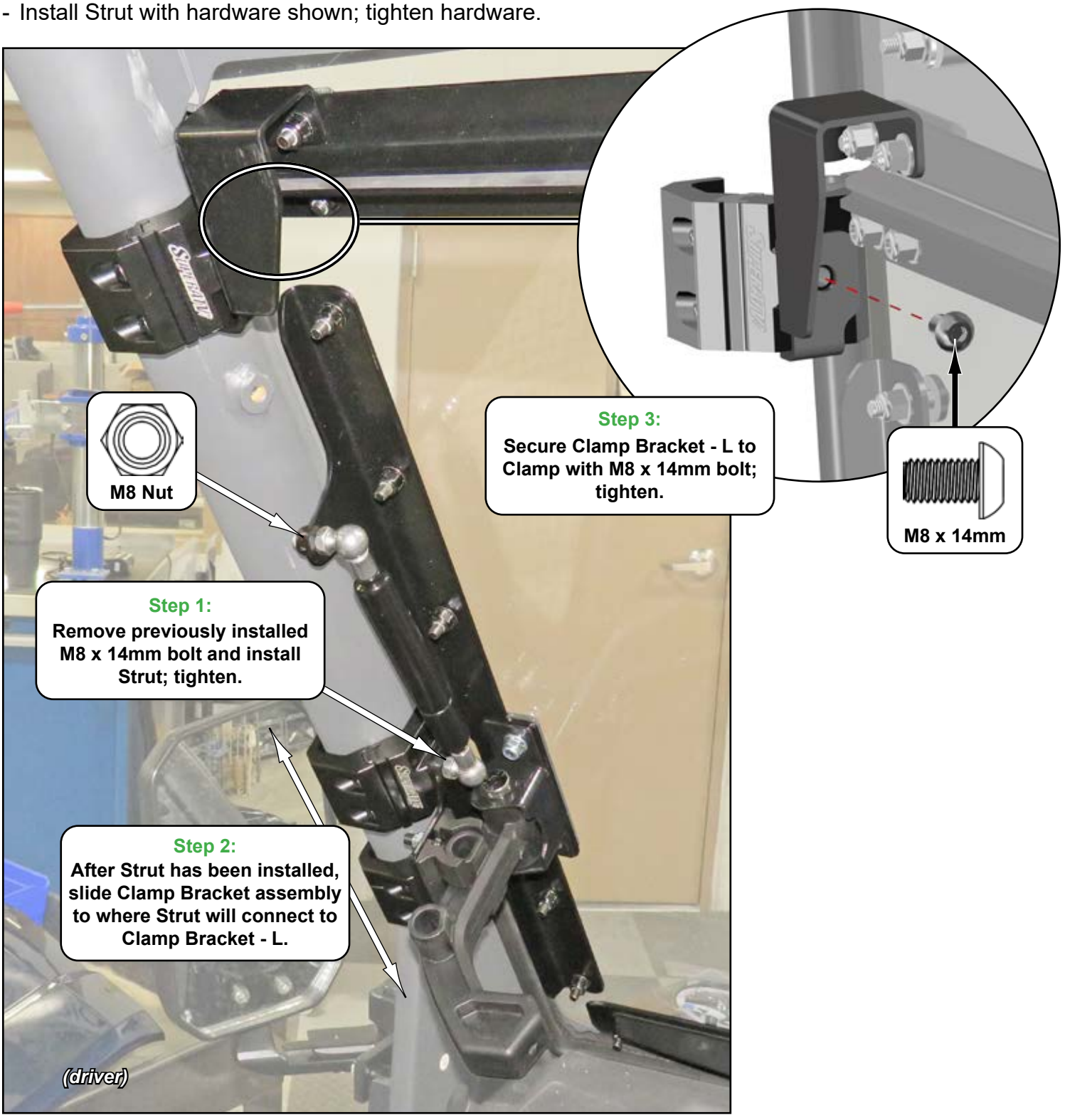

- Repeat steps for passenger side.
- Tighten all hardware.