ASSAULT INDUSTRIES

INSTALLATION INSTRUCTIONS

Glass Windshield: for Polaris RZR® PRO XP

- Do not discard packaging until product has been successfully installed.

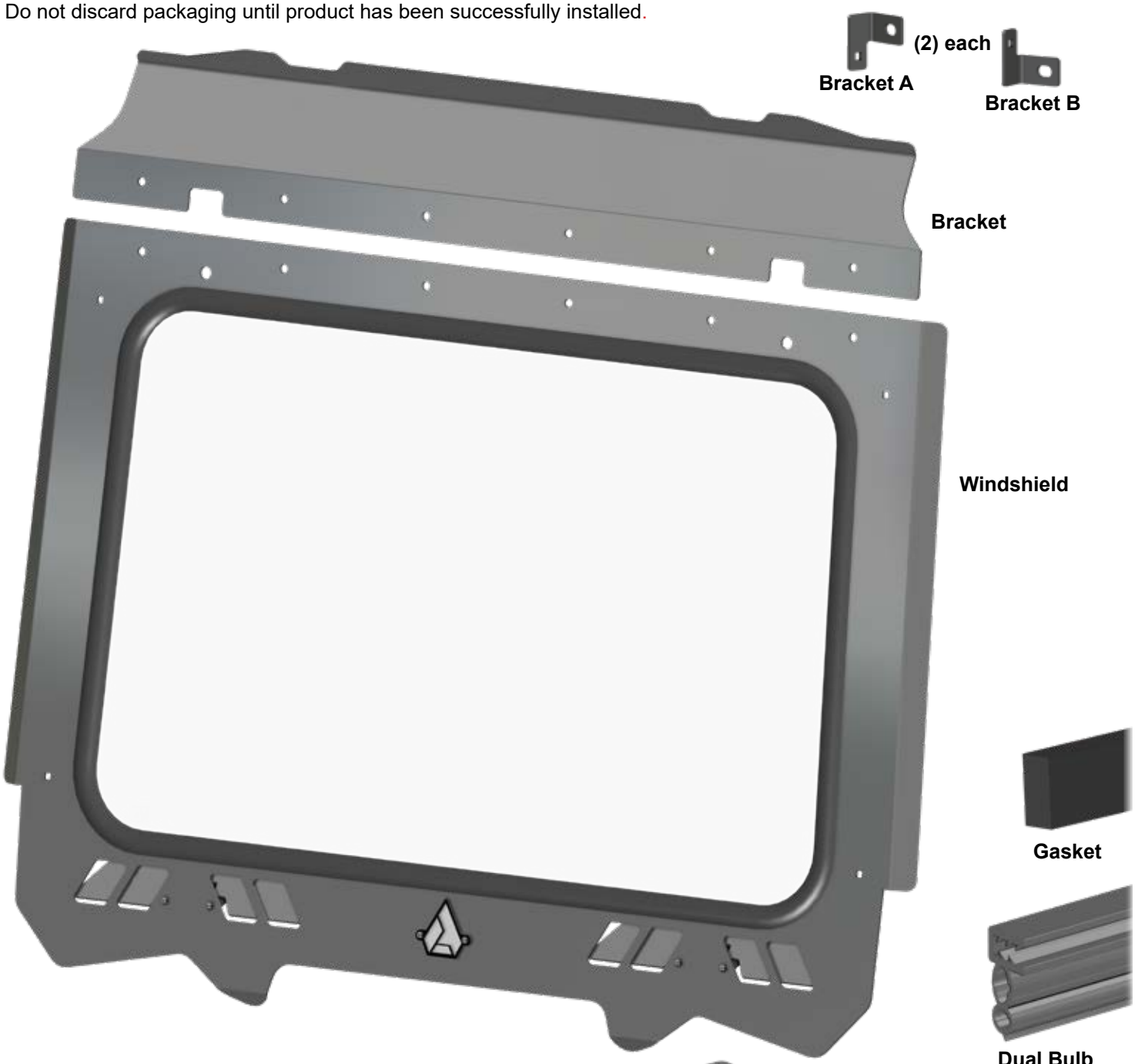



Clamp x 4
(remove Covers and Bolts)

NEED ADDITIONAL HELP?

Check out our YouTube channel
Call us : (714) 799-6711
Monday - Friday: 8am-5pm
Email: sales@assaultind.com

TERMS AND CONDITIONS DISCLOSURE

ATTENTION: USE OF THESE PRODUCT IS AT YOUR OWN RISK. YOU ASSUME ALL LIABILITY.

WARNINGS: MOTORSPORTS, RACING, AND VEHICLE MODIFICATION ARE INHERENTLY DANGEROUS ACTIVITIES THAT CAN RESULT IN DEATH, BRAIN DAMAGE, PARALYSIS OR SERIOUS PERSONAL INJURY. YOU ASSUME THE RISK OF INJURY OR DEATH WHENEVER PARTICIPATING IN MOTORSPORTS, RACING AND VEHICLE MODIFICATION. IF YOU DO NOT UNDERSTAND OR APPRECIATE THE DANGER OF THESE ACTIVITIES, PLEASE REFRAIN FROM ALL MOTORSPORTS ACTIVITY AND FURTHER USE OF ASSAULT INDUSTRIES PRODUCTS.

NO WARRANTIES: ALL PRODUCTS AND PARTS ARE SOLD "AS IS" WITHOUT ANY WARRANTY WHATSOEVER. EXPRESS WARRANTIES, IMPLIED WARRANTIES, WARRANTIES OF MERCHANTABILITY AND WARRANTIES OF FITNESS FOR A PARTICULAR PURPOSE ARE EXCLUDED. THE ENTIRE RISK OF QUALITY AND PERFORMANCE OF SUCH PRODUCTS AND PARTS IS WITH THE BUYER, USER, SUBSEQUENT USER, OR AGENT THEREOF (HEREIN "USER"). SHOULD SUCH PRODUCTS OR PARTS PROVE DEFECTIVE FOLLOWING THEIR PURCHASE, THE BUYER AND NOT THE MANUFACTURER(S), DISTRIBUTOR(S), OR RETAILER(S), ASSUME THE ENTIRE COST OF ALL NECESSARY SERVICES OR REPAIR AS RESULT OF A PART(S) FAILING.

NOT LIABLE FOR DAMAGES: In no event will Assault Industries, or its affiliates be liable for any special, direct, incidental or consequential damages, or any damages whatsoever, including, without limitation, the loss of life or limb, or damages due to bodily or personal injury, which may arise or result from the sale, installation, or use of any of its products and parts.

BUYER'S/USER'S RESPONSIBILITIES: It is the BUYER'S/user's responsibility to inspect and verify the dimensions, specifications, and performance of all products and parts as being appropriate for the use to which the BUYER/user will USE them prior to any actual installation and/or use of said products and parts. ALL products and parts are to be inspected by the user before each use for evidence of damage, defect or wear. Any deviation by the user from the manufacturer's specifications concerning use, maintenance, repair, alterations and modifications constitutes willful negligence.

VEHICLE MODIFICATIONS: Vehicle modifications can potentially affect safety, handling, stability and emissions compliance. Suspension modifications can negatively affect stability and increase the chance of rollover. The consumer accepts all responsibility for all resulting changes and modifications to said vehicle(s) and all potential risks AND FINES/IMPRISONMENT FOR NON-COMPLIANCE WITH STATE AND FEDERAL LAWS. The installation of ASSUALT INDUSTRIES' products or parts may adversely affect other vehicle components, safety equipment or manufactured goods (collectively "goods"). ASSUALT INDUSTRIES assumes no responsibility for any damage to other goods, or bodily injury that may arise due to failure of other goods, due to installation and/or use, either proper or improper, of its products or parts.

SAFETY CLAIMS: No warranty or representation is made as to this product's ability to protect the user from injury or death. the BUYER/user IS responsible for HIS/HER own actions and decisions. No safety product can completely protect the user from injury or death.

SEVERANCE OF DISCLAIMER PROVISIONS: By purchasing or using this product, the BUYER/user agrees that if any provision of this Disclaimer is held to be illegal, invalid or unenforceable under present or future law, such provision shall be fully severed from the Disclaimer and this Disclaimer shall be construed and enforced as if such illegal, invalid or unenforceable provision never comprised a part hereof, and the remaining provisions hereof shall remain in full force and effect and shall not be affected by the illegal, invalid or unenforceable provision. there shall be added automatically as part of this Disclaimer a provision as similar in its terms to such illegal, invalid or unenforceable provision as may be possible and be legal, valid and enforceable.

TERMS AND CONDITIONS

1. DEFINITIONS USED HEREIN: "Agreement" means this document, including any attached or affixed pages (e.g. purchase orders, invoices, etc.) and the terms and conditions contained herein. "Assault" means Assault Industries, a California corporation, including any affiliate, successor or predecessor companies. "Buyer" means the Buyer identified in any order of Goods which is hereby made a part of this Agreement. "Goods" means the goods, materials, parts, supplies and/or services supplied by Assault to Buyer.

2. COMPLETE AGREEMENT: All purchases of Goods by Buyer are subject to the terms and conditions of this Agreement regardless of other or additional terms or conditions that conflict with or contradict this Agreement in any purchase order, document, or other communication. Preprinted terms and conditions on any document of Buyer and/or Assault failure to object to conflicting or additional terms will not change or add to the terms of this Agreement. This Agreement supersedes and replaces all previous requests, quotations, orders or agreements concerning the Goods. Any additional or different terms will not become part of the contract or agreement for the sale of the Goods and are hereby objected to by Assault without further notice unless made in writing and signed by an authorized representative of Assault. The terms and conditions are subject to change and upon such change those terms and conditions shall control all future orders from Buyer.

3. PRICES AND PAYMENT: Prices are subject to change at any time without notice. All orders are subject to acceptance by Assault, as Assault may refuse to complete any order for any lawful reason and/or Assault has any reason to believe that Buyer's Representations and Warranties in Paragraph 14 are false and/or misleading. Any applicable taxes or other governmental impositions, which Assault may be required to pay or collect, will be added to the price and paid by Buyer unless Assault receives a valid exemption certificate. Payment in full is due at time of order. All sales are final.

4.TITLE, DELIVERY AND RISK OF LOSS: Unless otherwise stated, Assault best judgment will be used in routing shipments and subject to its Shipping Policy. Title to the Goods and liability for loss or damage in transit or thereafter shall pass to Buyer upon Assault delivery of the Goods to a common carrier for shipment. Shipping dates are not guaranteed. Assault disclaims any direct or indirect liability for any damages suffered by Buyer which result from delays in delivery.

5. SHORT, DAMAGED OR DEFECTIVE GOODS: Buyer agrees to inspect all Goods within three days of receipt when shipped, or immediately upon receipt if delivered in person from Assault personnel to Buyer. After that time all Goods are deemed to be accepted. Claims for Goods delivered short, errantly, damaged or defective (not due to fault of carrier) shall be filed in writing with Assault within five days after date of shipment. Upon acceptance of Buyer's timely written claim and issuance of a written return authorization (RA), Assault agrees to repair, replace, or, at Assault option, issue credit for all defective Goods which have not been altered, machined or finished, provided the Goods are returned unaltered with a valid RA to Assault facility within 20 days of shipment. Assault reserves the right to refuse delivery of any Goods returned without a valid RA. Buyer must prepay all freight, which will be reimbursed by Assault for defective, damaged or errant Goods. Claims for Goods delivered short, errant, damaged or defective as a result of the fault of the carrier will be handled by Buyer directly with the carrier.

6. EXCUSABLE DELAYS: No liability shall result from delay in performance or non performance, directly or indirectly caused by circumstances beyond Assault control, which include, but are not limited to, Acts of God, fire, explosion, flood, war, terrorism, act of or authorized by any government, accident, labor trouble, or shortage or inability to obtain material, equipment or transportation. Quantities so affected may be eliminated from the Agreement without liability, but the Agreement shall remain otherwise unaffected.

7. LIMITED WARRANTY AND WARRANTY DISCLAIMER: Assault warrants its Goods to be free from material defects in material and workmanship for 90 days from delivery except: (a) when Goods have been modified or altered following delivery and/or subject to improper handling, storage, installation, operation, or maintenance; (b) when an item is purchased by Assault as a component part of the Goods, except to the extent to which such item or items are covered by the warranty, if any, of the original manufacturer; (c) when any component of or instrument used to manufacture the Goods was provided or sold to Assault by Buyer, or otherwise specified by Buyer; and (d) no warranty of a component part shall extend beyond the warranty period of the device in which such component part is incorporated. Any claim by Buyer made pursuant to Assault warranty must be made in writing during the warranty period. Assault shall have the right to inspect the Goods claimed to be defective and shall have the right to determine the cause of such alleged defect. Assault agrees to repair, replace, or, at Assault option, issue credit for all Goods deemed defective under Assault limited warranty. All Goods replaced or repaired by Company under its warranty shall be replaced or repaired F.O.B. Assault facility. Except as expressly stated herein, Assault makes no other warranties concerning the Goods whatsoever. THE AGENTS AND EMPLOYEES OF ASSAULT ARE NOT AUTHORIZED TO MAKE MODIFICATIONS EITHER WRITTEN OR ORAL TO THIS WARRANTY OR AGREEMENT, OR ANY ADDITIONAL WARRANTIES WHICH MAY BE BINDING UPON ASSAULT. ACCORDINGLY, ADDITIONAL STATEMENTS BY ANY EMPLOYEE OR AGENT OF ASSAULT, WHETHER ORAL OR WRITTEN, DO NOT CONSTITUTE WARRANTIES AND SHOULD NOT BE RELIED UPON BY BUYER, ITS EMPLOYEES, AGENTS, REPRESENTATIVES OR ANY THIRD PARTY. ASSAULT DISCLAIMS AND EXCLUDES ANY AND ALL OTHER EXPRESS WARRANTIES AND ALL IMPLIED WARRANTIES, INCLUDING WITHOUT LIMITATION, THE IMPLIED WARRANTIES OF MERCHANTABILITY AND FITNESS FOR A PARTICULAR PURPOSE.

8. LIMITATIONS OF REMEDIES AND DAMAGES: Buyer agrees that Assault obligations described in Paragraph 7 is Buyer's sole and exclusive remedy, and that Assault total liability to Buyer, Buyer's customers or to any other person, relating to this Agreement, its performance or non-performance, or from the use of Goods furnished, is limited to the price of the Goods and/or services giving rise to the claim. Except as to title, such obligation and liability shall terminate 90 days from delivery. ASSAULTAND ITS SUPPLIERS WILL NOT, IN ANY EVENT, BE LIABLE FOR ANY SPECIAL, INCIDENTAL, CONSEQUENTIAL OR PENAL DAMAGES INCURRED IN CONNECTION WITH THE GOODS, WHETHER ANY CLAIM FOR RECOVERY IS BASED UPON OR ARISES OUT OF THEORIES OF CONTRACT, NEGLIGENCE, TORT (INCLUDING STRICT LIABILITY) OR OTHERWISE, including, but not limited to back charges; labor costs; costs of removal, replacement, testing or installation; loss of efficiency; loss of profits or revenues; loss of use of the Goods or any associated products; damages to associated products; lateness or delays in delivery; unavailability of Goods; cost of capital; cost of substitute Goods, facilities or service; downtime; or claims from Buyer's customers or other parties to Buyer or directly to Assault for such damages.

9. INDEMNITY: Buyer shall release, indemnify, defend and hold Assault harmless, and its present and future officers, directors, officials, employees, agents, subsidiaries, affiliates, successors and assigns from any and all liability (including without limitation liability for negligence or strict liability), claims, losses, suits, demands, penalties, fines, forfeitures, damages and costs (including reasonable attorney's fees) caused by, arising out of or relating to: (a) any form of intellectual property claim related to designs, instructions, specifications or intellectual property developed or furnished by Buyer; (b) any claim related to any component of or instrument used to manufacture the Goods provided or sold to Assault by Buyer, or otherwise specified by Buyer; (c) any claim related to the combination of the Goods with any hardware, text, graphics, software or other device supplied or specified by Buyer, and (d) any claim arising from the modification or alteration of the Goods by Buyer; (e) Buyer's negligent, unlawful, or improper use of the Goods and (f) any liens, liabilities, damages, costs, expenses and the like arising out of or related to any form of claim covered under this Paragraph.

10. CLERICAL ERRORS: Stenographical and clerical errors are subject to correction.

11. APPLICABILITY: This document and any subsequent Agreement referred to herein shall be governed by and construed in accordance with the laws of the State of California, including the California Uniform Commercial Code. This Agreement shall binding upon the successors, assigns, affiliates and any other related third parties of Buyer.

12. SEVERABILITY: Invalidity of any of the terms provided herein shall not affect the validity of any other term.

13. WAIVER: Waiver by Assault of Buyer's performance, or inaction with respect to Buyer's breach of any provision of this Agreement, or failure of Assault to enforce any provision of this Agreement, will not be deemed a waiver of future compliance or deemed a course of performance modifying such provision, and such provision will remain in full force and effect as written.

14. REPRESENTATIONS AND WARRANTIES: By placing an order with Assault, Buyer represents and warrants all of the following are true and correct as Assault is specifically relying on all of Buyer's representations and warranties in agreeing to accept and fulfill Buyer's order: (1) Buyer has independently verified all applicable federal, state, and local laws and confirmed Buyer is lawfully permitted to purchase and own the Goods, (2) that Buyer will only modify or alter the goods in compliance with all applicable federal, state, and local laws; (3) the Buyer acknowledges and accepts that the Goods, unless expressly stated otherwise, have not been registered with any governing body; (4) that Buyer will not transfer the Goods if altered or modified unless expressly permitted by applicable law; (5) that Buyer will only use the Goods in compliance with all applicable laws to which Buyer may be subject; and (6) Buyer has not relied on any statement made or implied by Assault in making any representation or warranty in this Paragraph.

To ease installation, soak Dual Bulb in hot water before cutting or installing to increase flexibility.

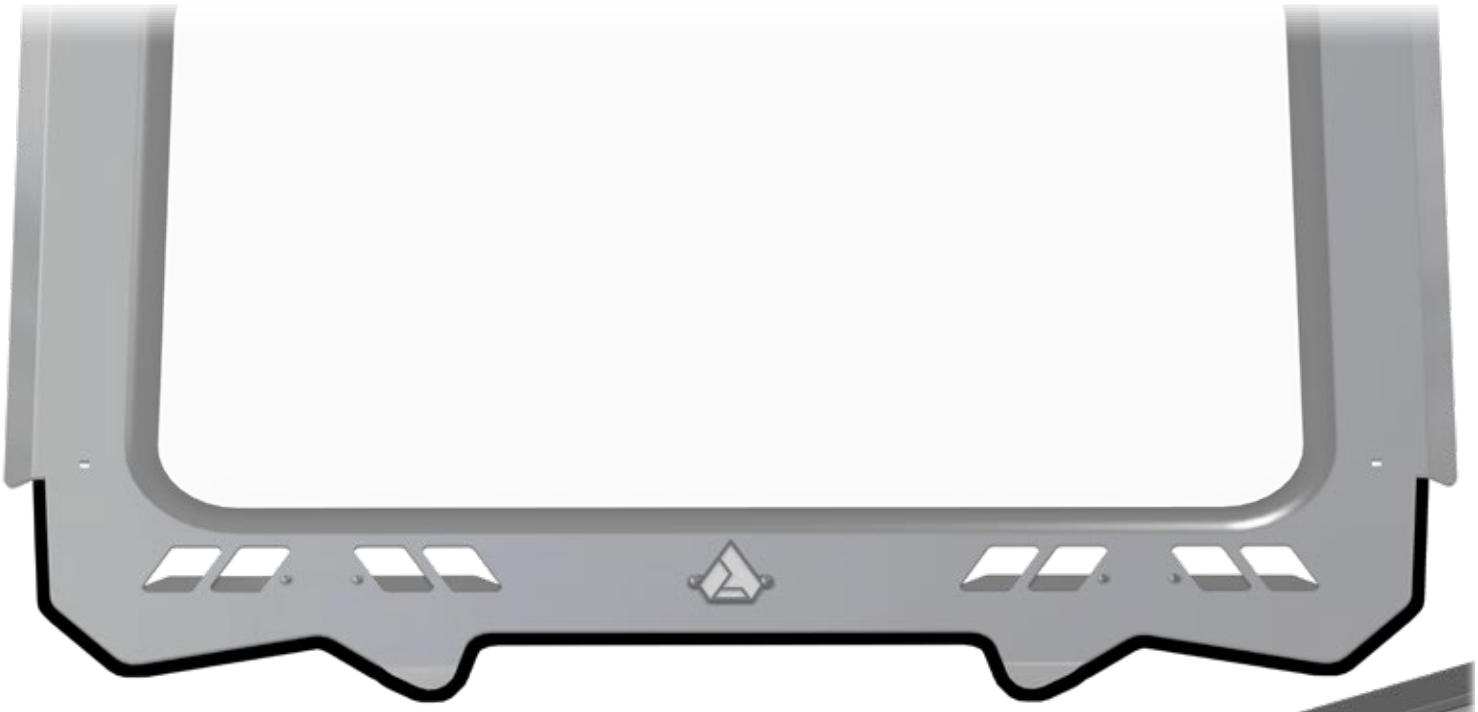

install Dual Bulb across bottom of Windshield

Dual Bulb



install Gasket to sides of Frame

- Install Bracket to Windshield.

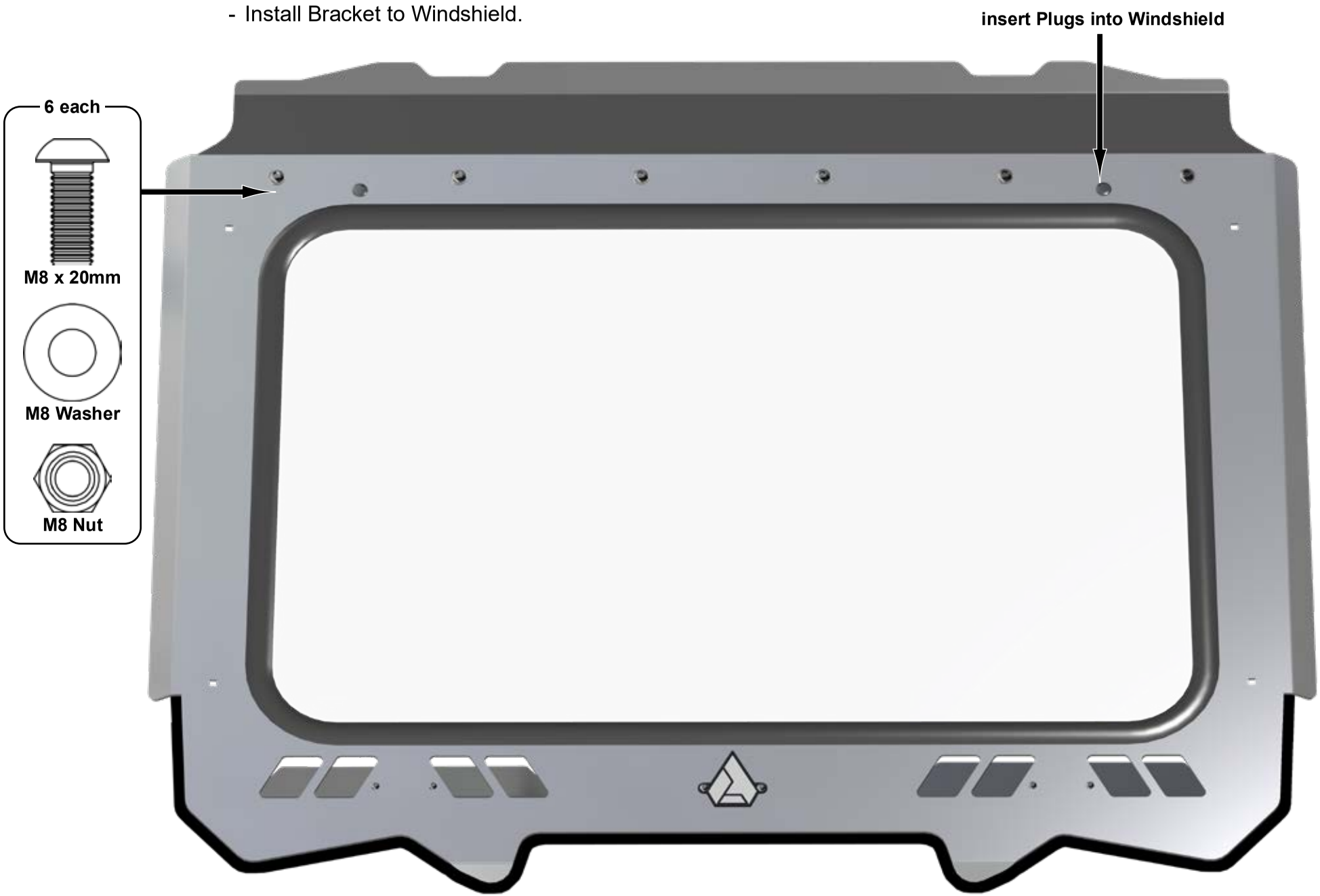

Install Brackets with hardware shown; do not tighten completely.

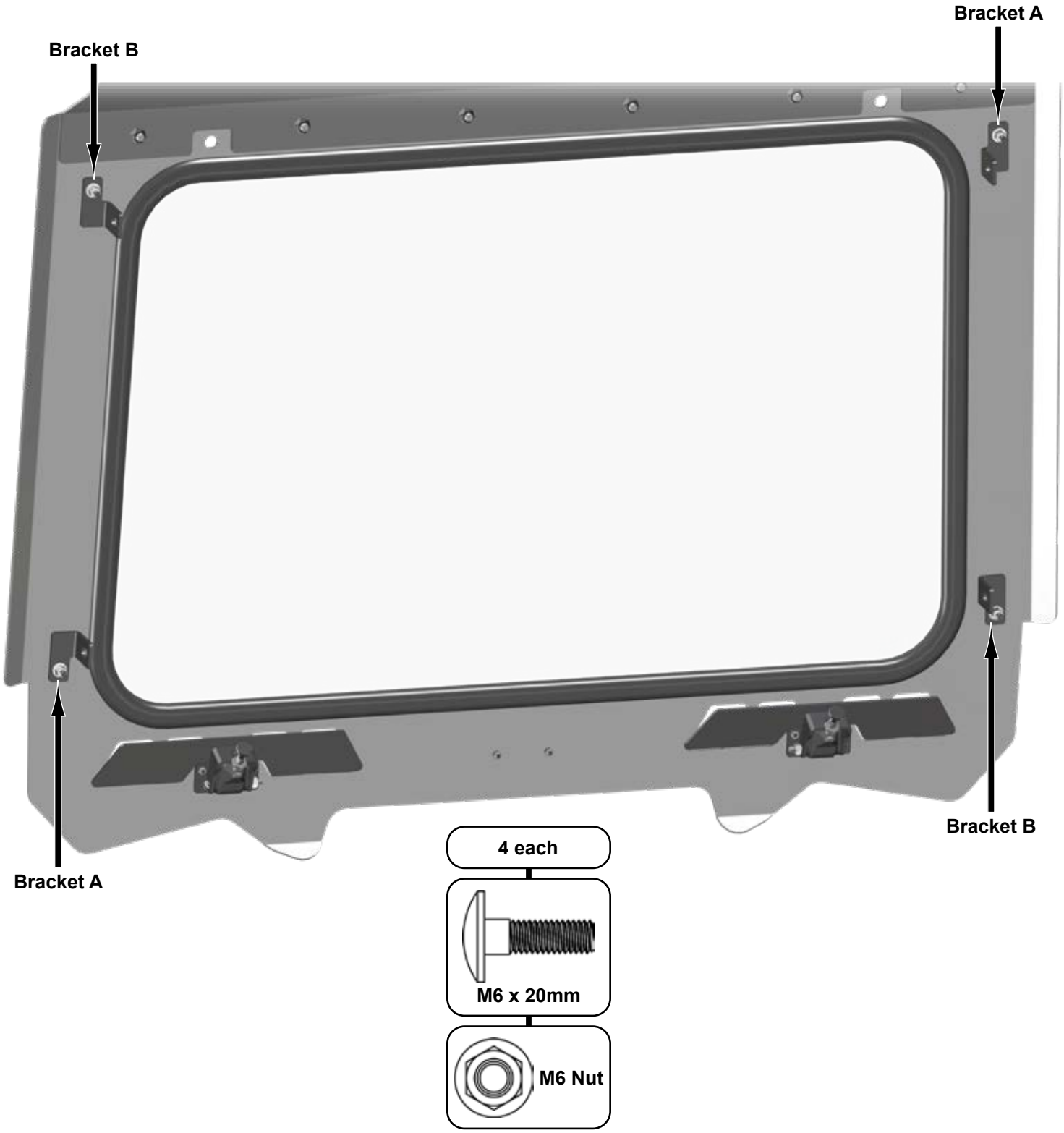

Secure Clamps to Cage in locations shown with previously removed hardware; do not tighten completely.



Place Windshield onto machine.



Secure Windshield to Clamps with hardware shown.

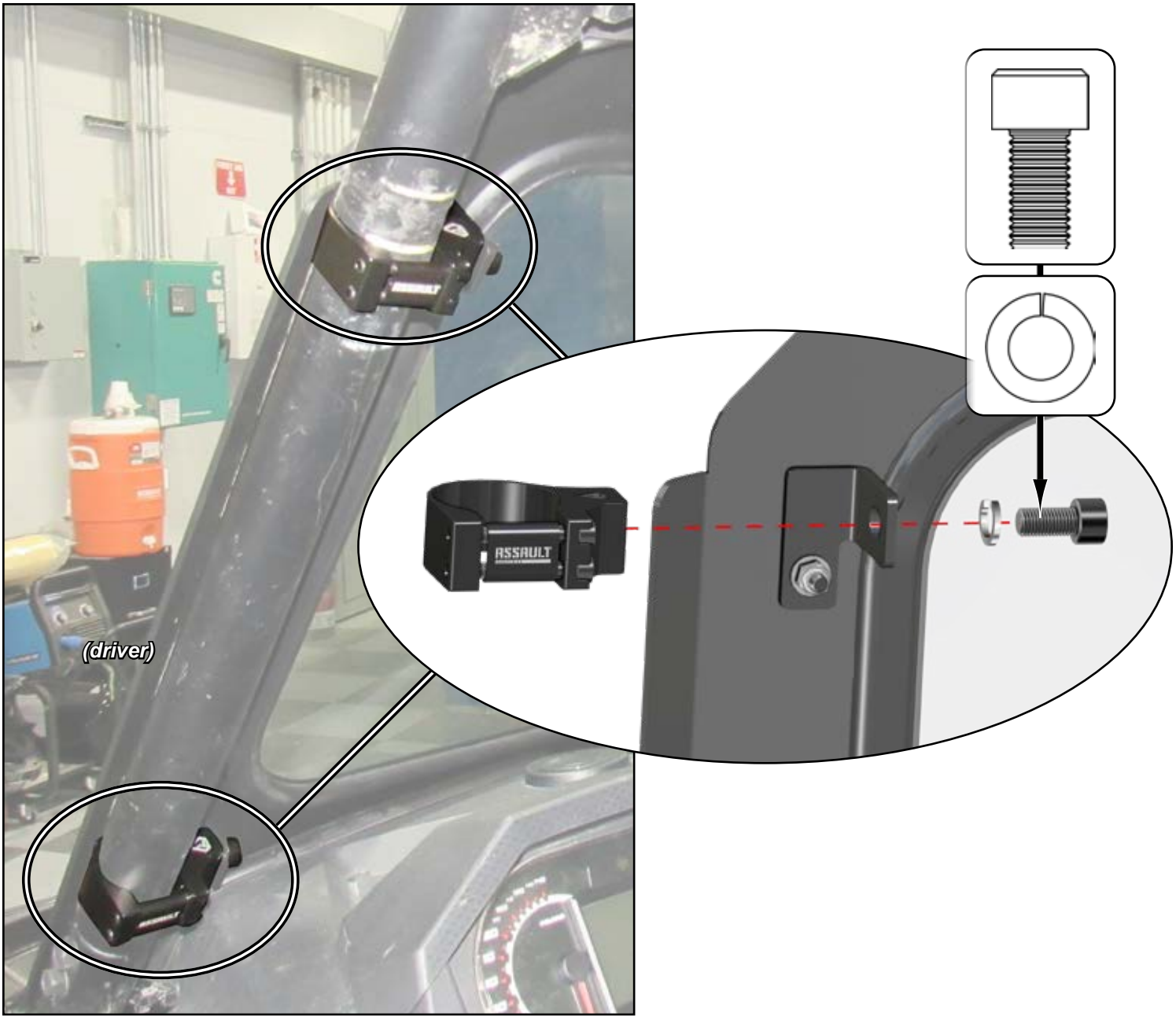

Align assembly to machine and tighten all hardware.