2753 Michigan Road • Madison, Indiana 47250 • 855-743-3427

INSTALLATION INSTRUCTIONS

Heater Kit: for Honda Pioneer 1000

Do not discard packaging until product has been successfully installed.


Ducting

Tubing


Cap

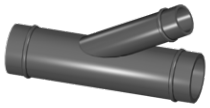
Adadpter x 2

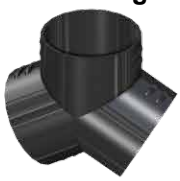
Y Fitting

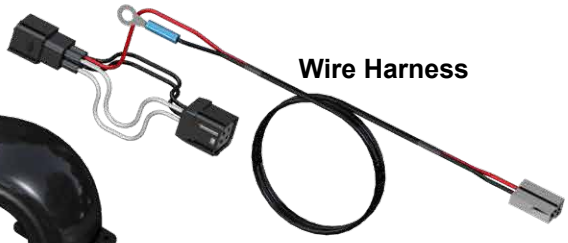
Wire Harness


Elbow


Defrost Bracket


Vent x 2


Mount x 2

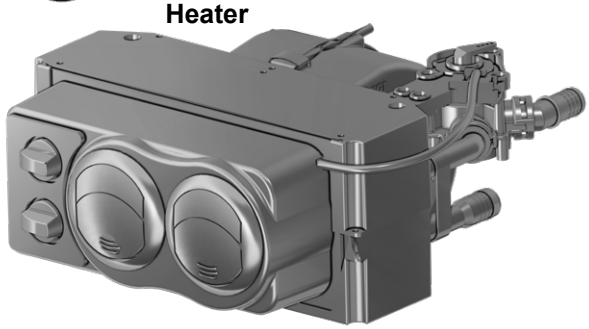
Heater


Hole Saw Kit


Support

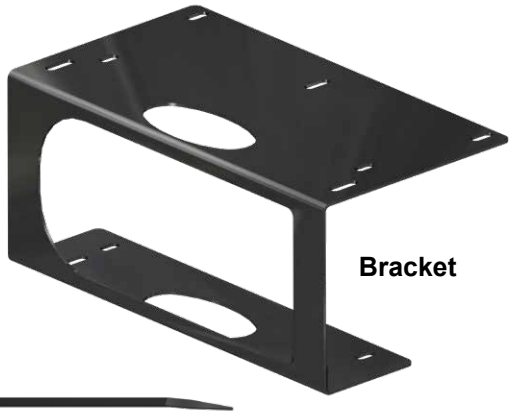
Bracket


Elbow x 2


4x Large Clamp


8x Small Clamp


Wire Ties


Hose Pliers


2x Grommet

(disregard any remaining hardware)

Need help with your installation?

sales@superatv.com

www.superatv.com

1-855-743-3427

8:00am - 8:00pm EST M-Th
8:00am - 7:00pm EST Friday
9:00am - 2:00pm EST Saturday

Read instructions and view illustrations before beginning.

Thank You For Choosing

© 2019 SuperATV.com®. All Rights Reserved.

- ***Tubing and Duct lengths are SuperATV recommended. User may install components in other locations. Verify lengths before final installation.***
- ***Check behind areas being drilled for interference.***
- ***Avoid burns and scalding by working on cool vehicles.***
- ***Secure components away from rotating objects.***
- ***Do not tighten mounting hardware until all components are in place.***
- ***Use manufacturers recommended coolant.***
- ***Avoid sharp bends when installing Tubing.***
- ***Verify that no leaks are present after installation.***

CUSTOMER NOTIFICATION AND DISCLAIMER LIABILITY

This product is a modification for utility task vehicles and all terrain vehicles. Use this product at your own risk.

Warranty and Liability Limitations. The Buyer hereby assumes all risks associated with the use and/or installation of this product. Buyer waives all liability claims against SuperATV® of any kind or nature, including, but not limited to, liability for penalties, fines, property damage, personal injury or death, to the fullest extent permitted by law. Buyer acknowledges and agrees that SuperATV® is not liable for any direct, indirect, incidental, consequential or special damages, including but not limited to, damage, loss of life, loss of property or equipment, loss of profits or revenue, injury, or claims from any individual or entity arising from the use of this product.

The warranty for this product, if any, may give you ("Buyer") specific legal rights, and Buyer may also have other rights which may vary from state to state. The installation of this product may void or otherwise adversely affect your factory warranty.

Consult your vehicle warranty before using this Product. Under no circumstances will SuperATV® be liable for the voidance of the Buyer's vehicle warranty. Buyer assumes all risk and responsibility if a manufacturer and/or dealer voids the Buyer's vehicle warranty due to use of this Product.

Safety and Laws. Operate your vehicle at all times in a safe manner. You must abide by all local, state, and federal laws, including but not limited to vehicle safety, traffic laws, and ordinances. It is your responsibility to know the laws and how they apply to you. The installation of this product may violate certain local, state, and federal laws. Be advised that laws vary depending on town, city, county, state, etc. Use of this product on public streets, roads, or highways may be in violation law. The Buyer is solely and exclusively legally and personally responsible for any violation of the law by the installation or use of this product. In no case will SuperATV® be held liable if Buyer violates the law or uses the product in an unsafe manner.

The Buyer is responsible to fully understand the capability and limitations of his/her vehicle according to manufacturer specifications, warnings and instructions and agrees to hold SuperATV® harmless from any damage resulting from failure to adhere to such specifications, warnings and/ or instructions. The Buyer is also responsible to obey all applicable federal, state, and local laws when operating his/her vehicle while using this product, and the Buyer agrees to hold SuperATV® harmless from any violation thereof.

Installation. The installation of this product on your vehicle indicates that you have had the opportunity to inquire about applicable local, state, and federal laws and ordinances and that you have read and understand, and accept all of the terms of, this Disclaimer.

SuperATV® shall not be responsible for the proper installation, use, and service of this product. Rather, the Buyer shall be solely responsible for the installation of the product and any damage that may be done to the vehicle or vehicle components as a result of modifications made by the Buyer.

- Remove Shipping Plug from Heater.

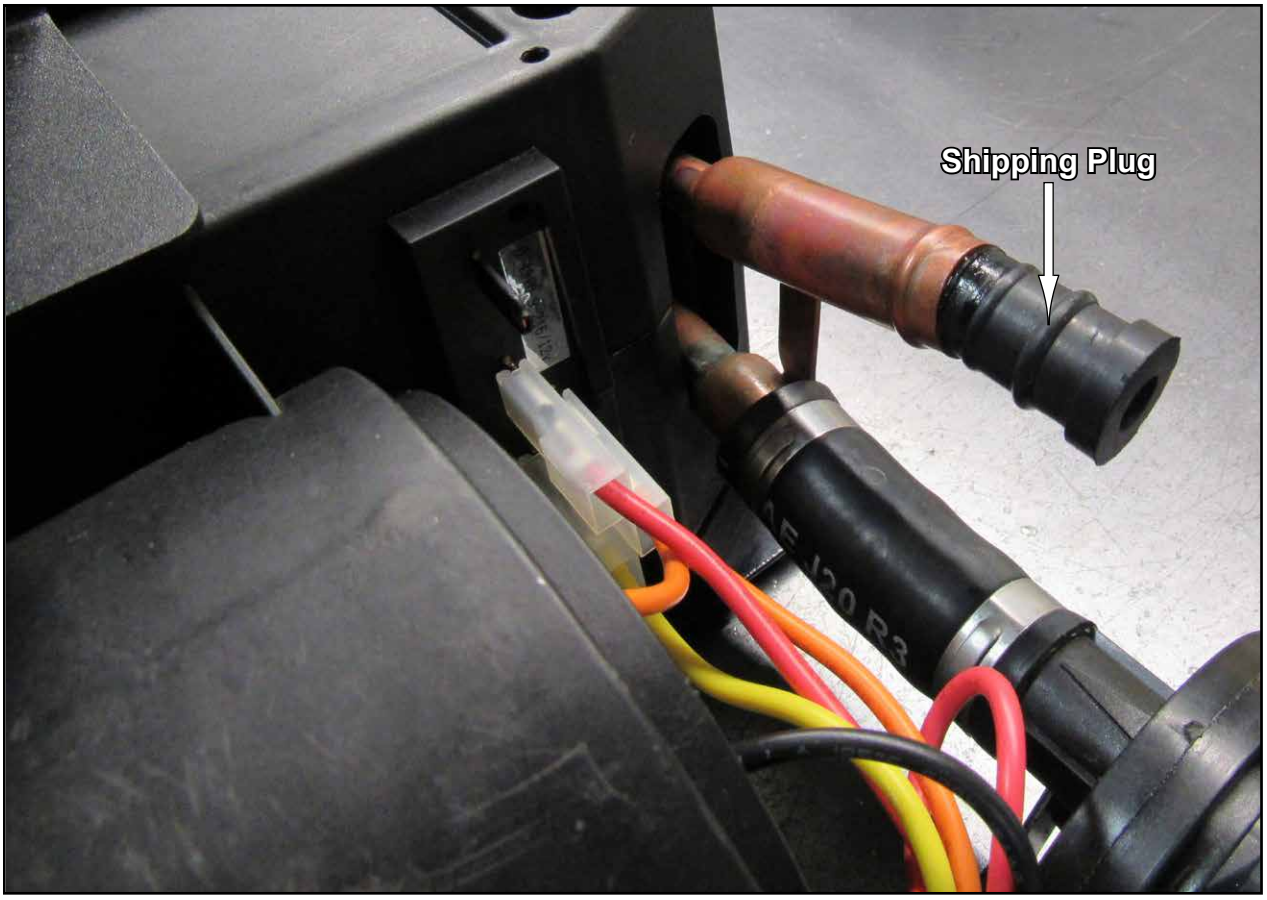

Verify wiring shown below is connectoed before installing.

- Open Vent, insert finger, and pull Controls away from Base.



- If not connected, connect orage wire to Tab shown.

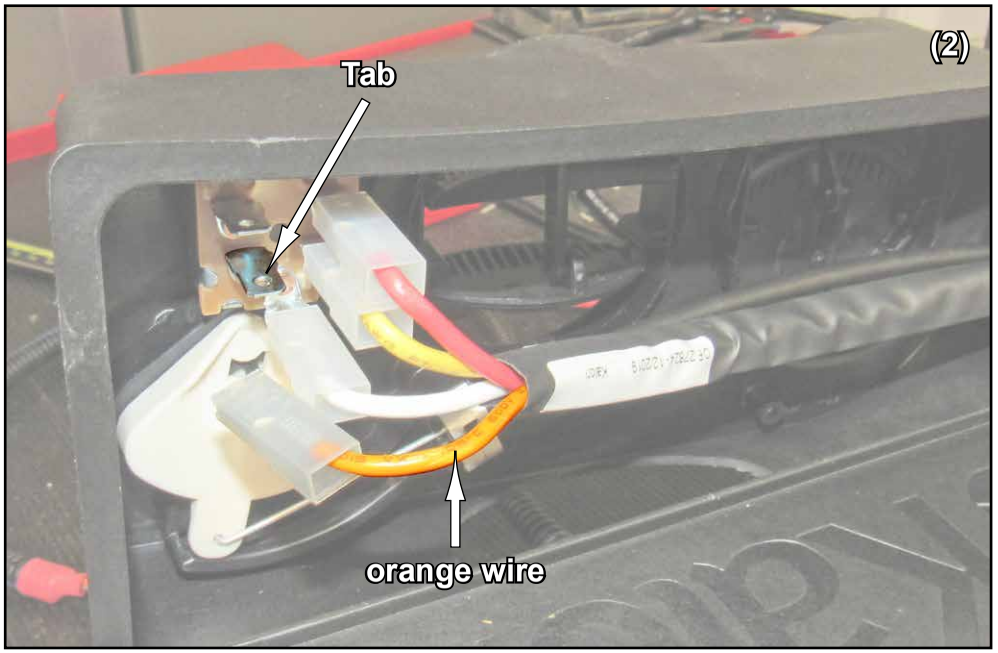

- Verify that all connections shown are connected and secure.
- Push Controls back into Base.




remove driver side
Door and Fender


remove Door

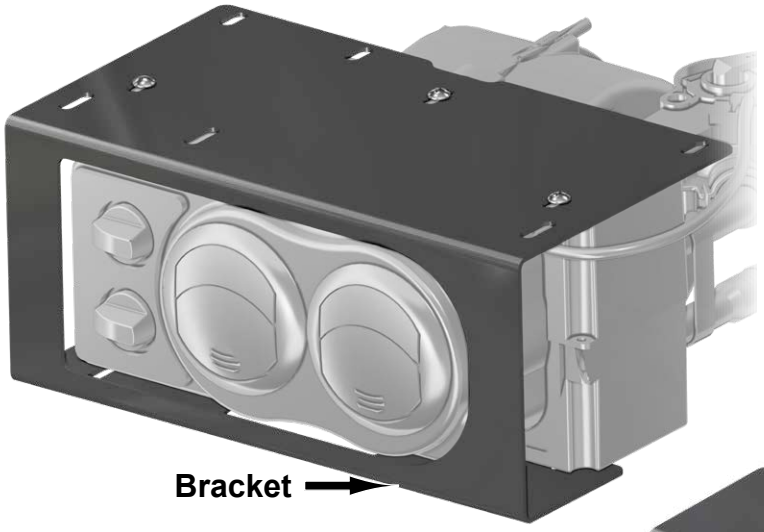

install Bracket to Heater
with hardware shown

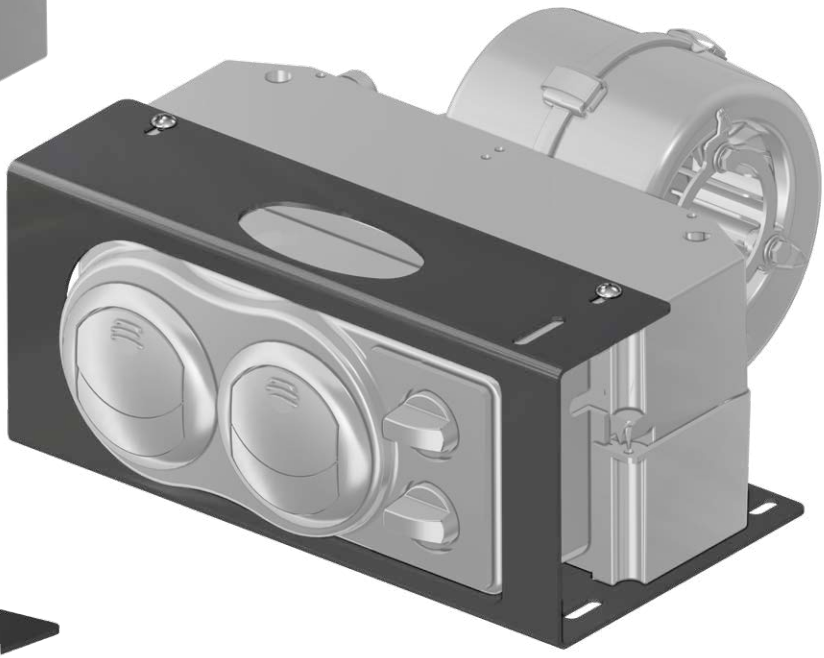

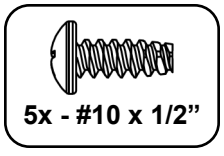

insert Elbow into
Defrost Bracket

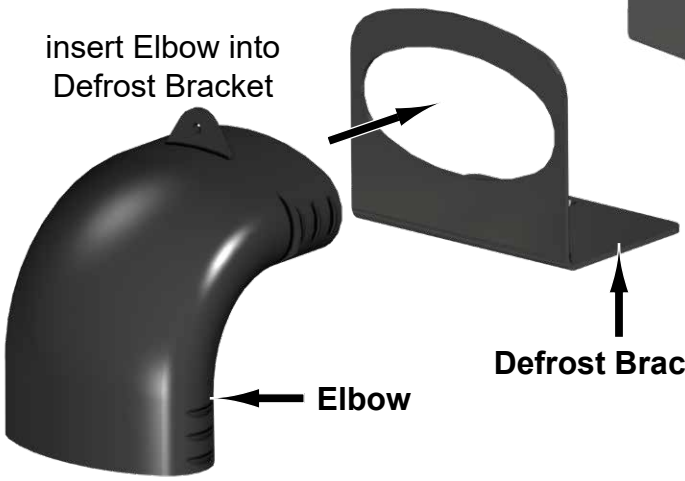

secure Defrost Bracket with hardware shown



insert Elbow into opening in Heater

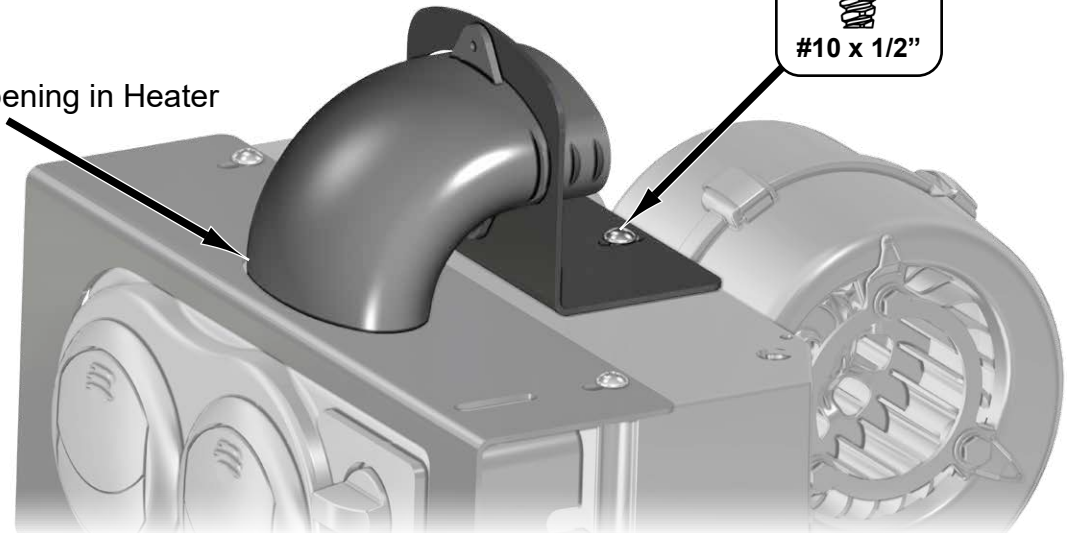

- Install Mounts to Bracket with hardware shown.

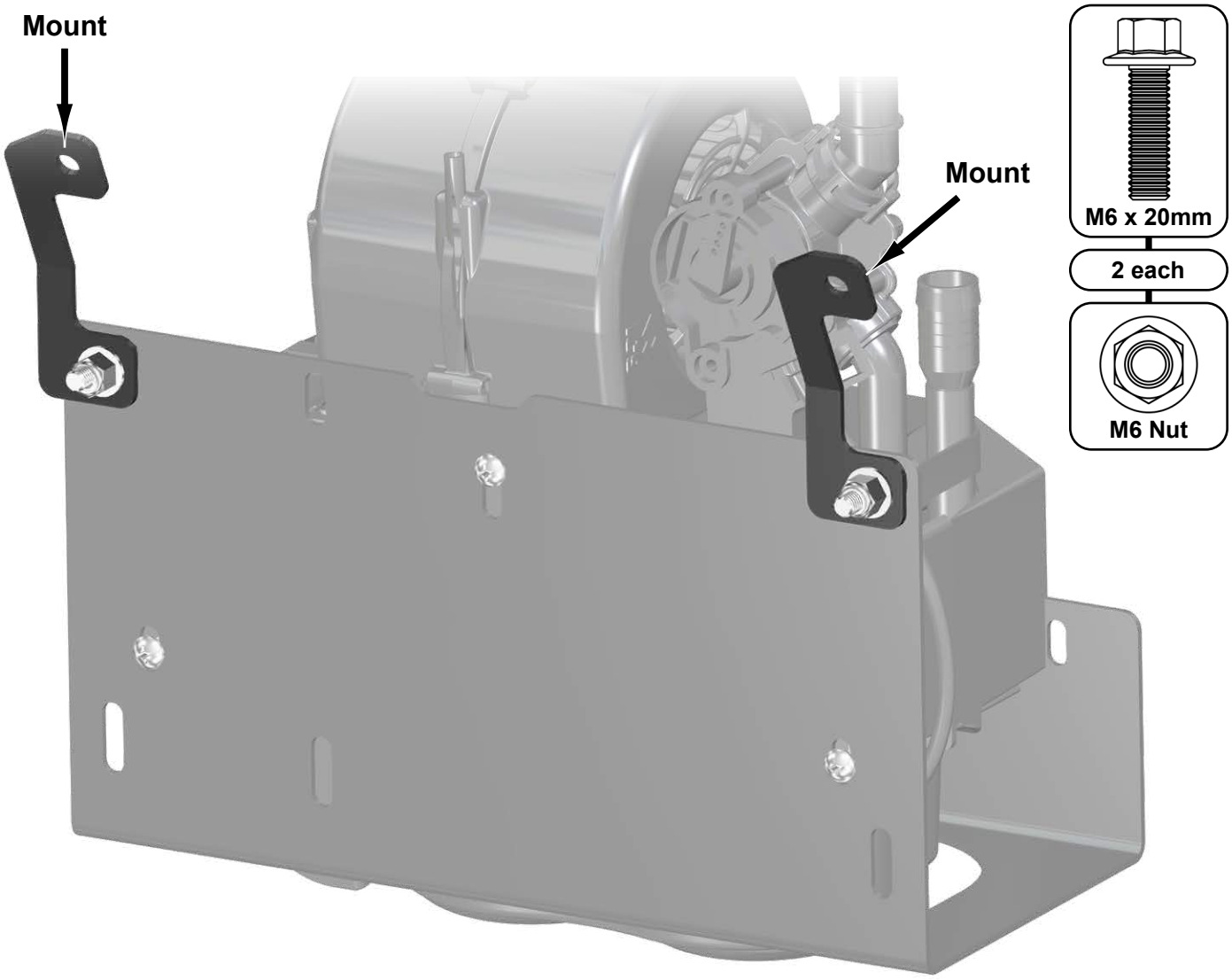



- Install Support to Dash with (2) stock screws.
- Use Support as a template and mark locations shown below.
- Remove Support from Dash and drill (2) Ø8mm holes into Dash.

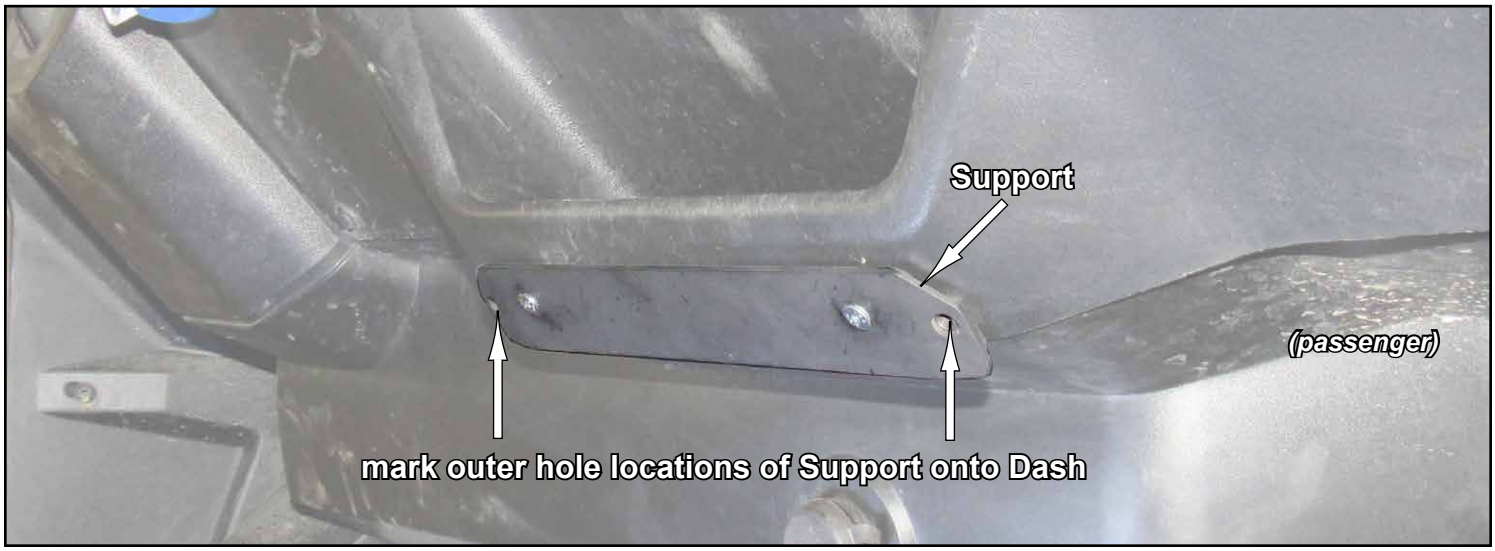

- Slide Support between Firewall and Dash and secure with hardware shown; tighten completely.

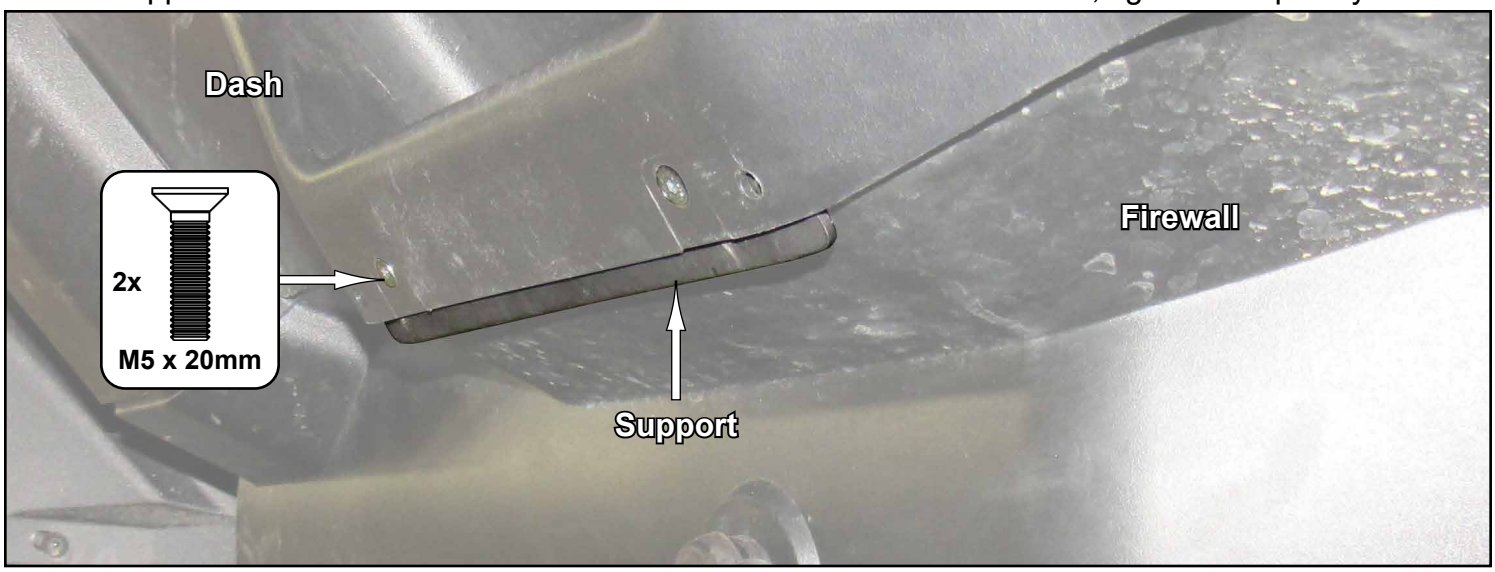

- Remove 12V AUX connection.



- Use provided Ø1-1/4” Hole Saw and make hole in area shown.
- Install 12V AUX connection to new location.
- Plug stock 12V AUX connection with Cap.

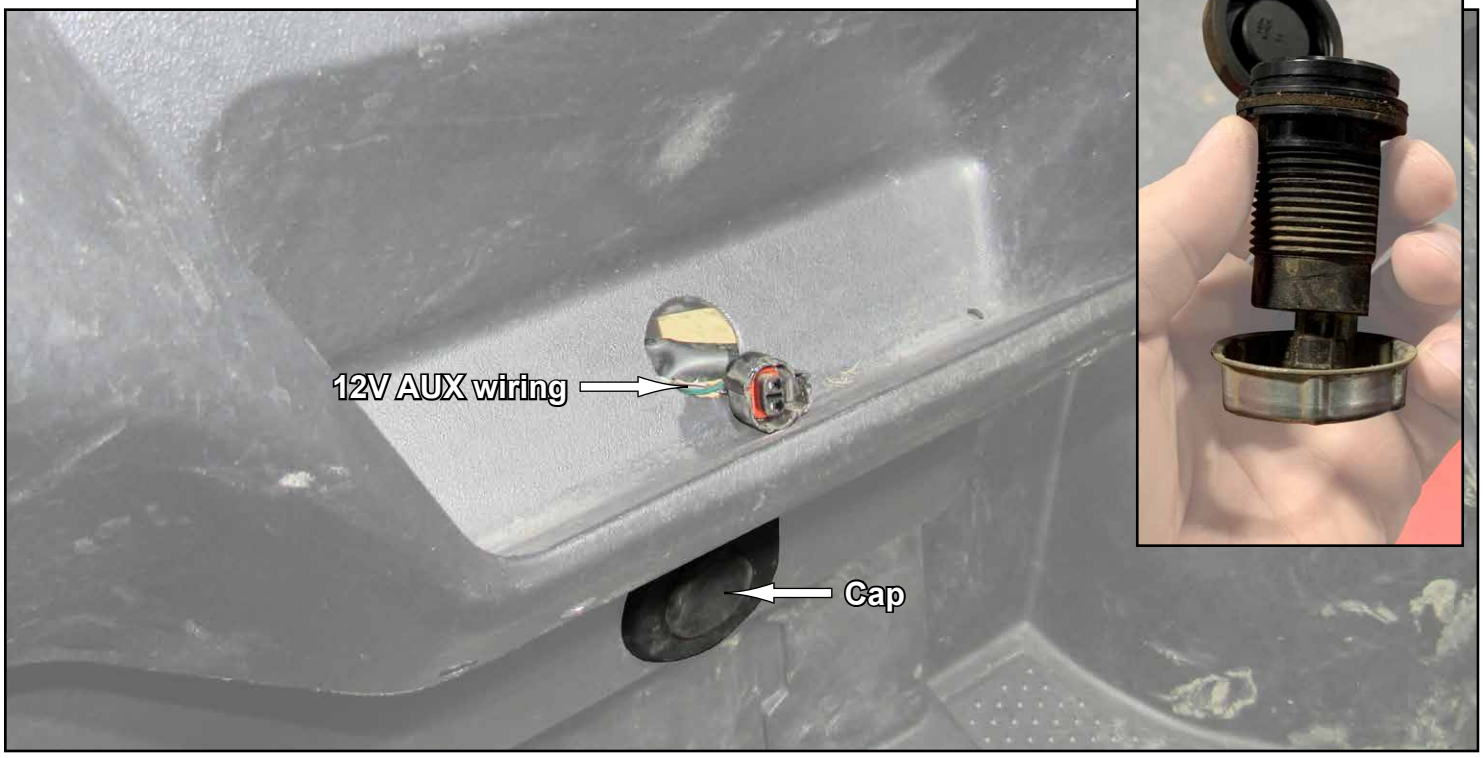

- Use provided Ø3” Hole Saw and make hole for Ducting.



- Cut Ducting to length shown and insert into hole.



- Install Heater to Support and Firewall with hardware shown.



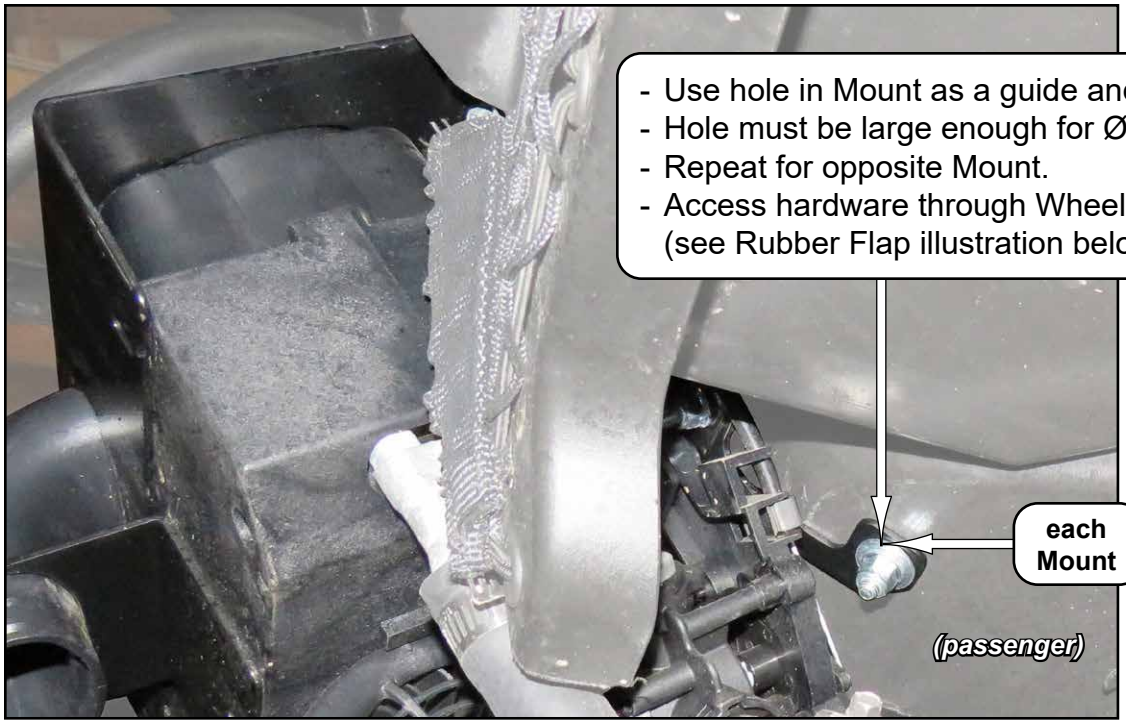



Plumbing

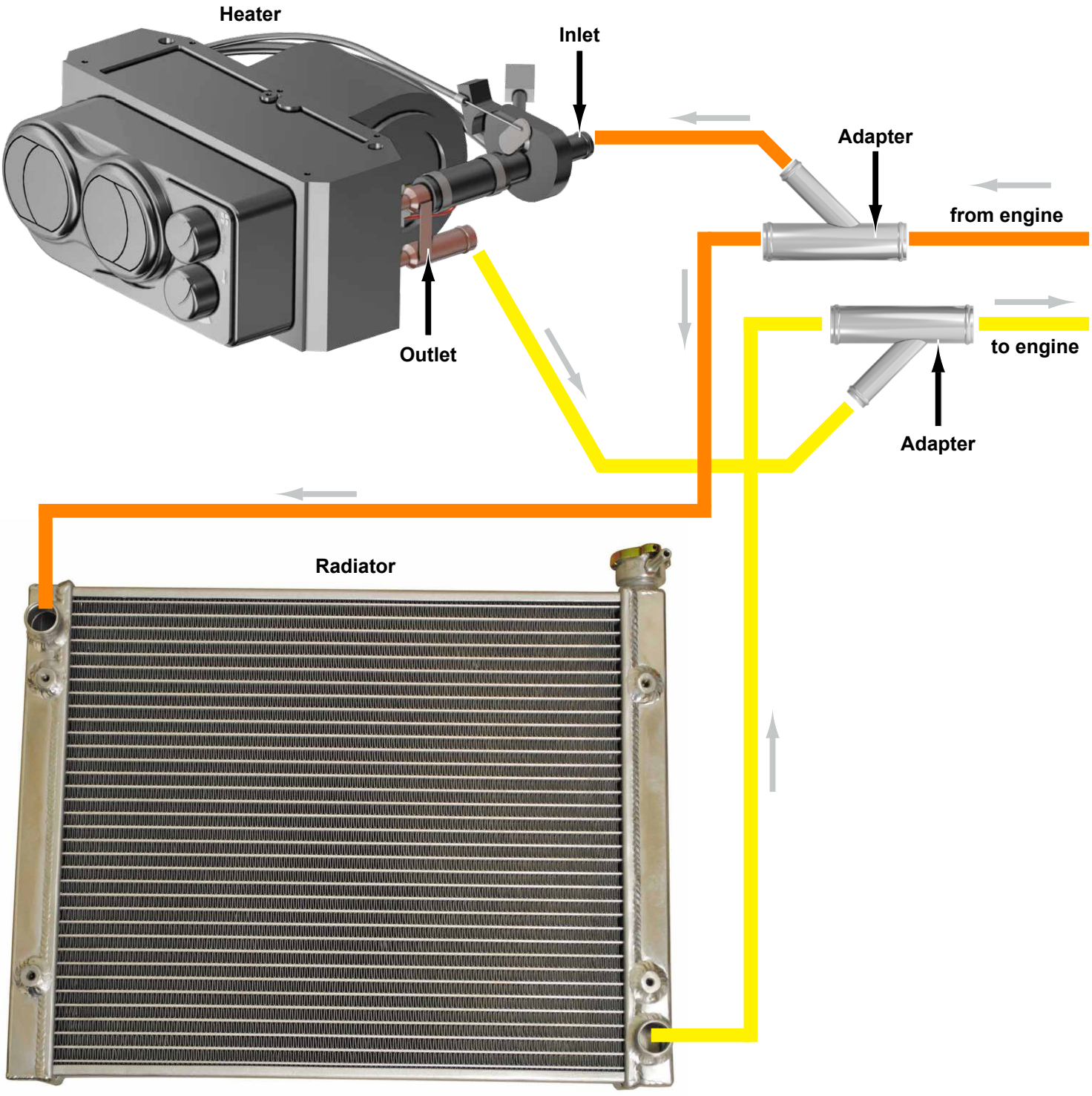
Heater
Inlet
Adapter
from engine
Outlet
to engine
Adapter
Radiator

- Cut Tubing to lengths shown and install to Heater.
- Install Elbows to Tubing with Small Clamps.
- Secure Ducting as shown and route up, behind Dash, and into Hood compartment (see page 12).

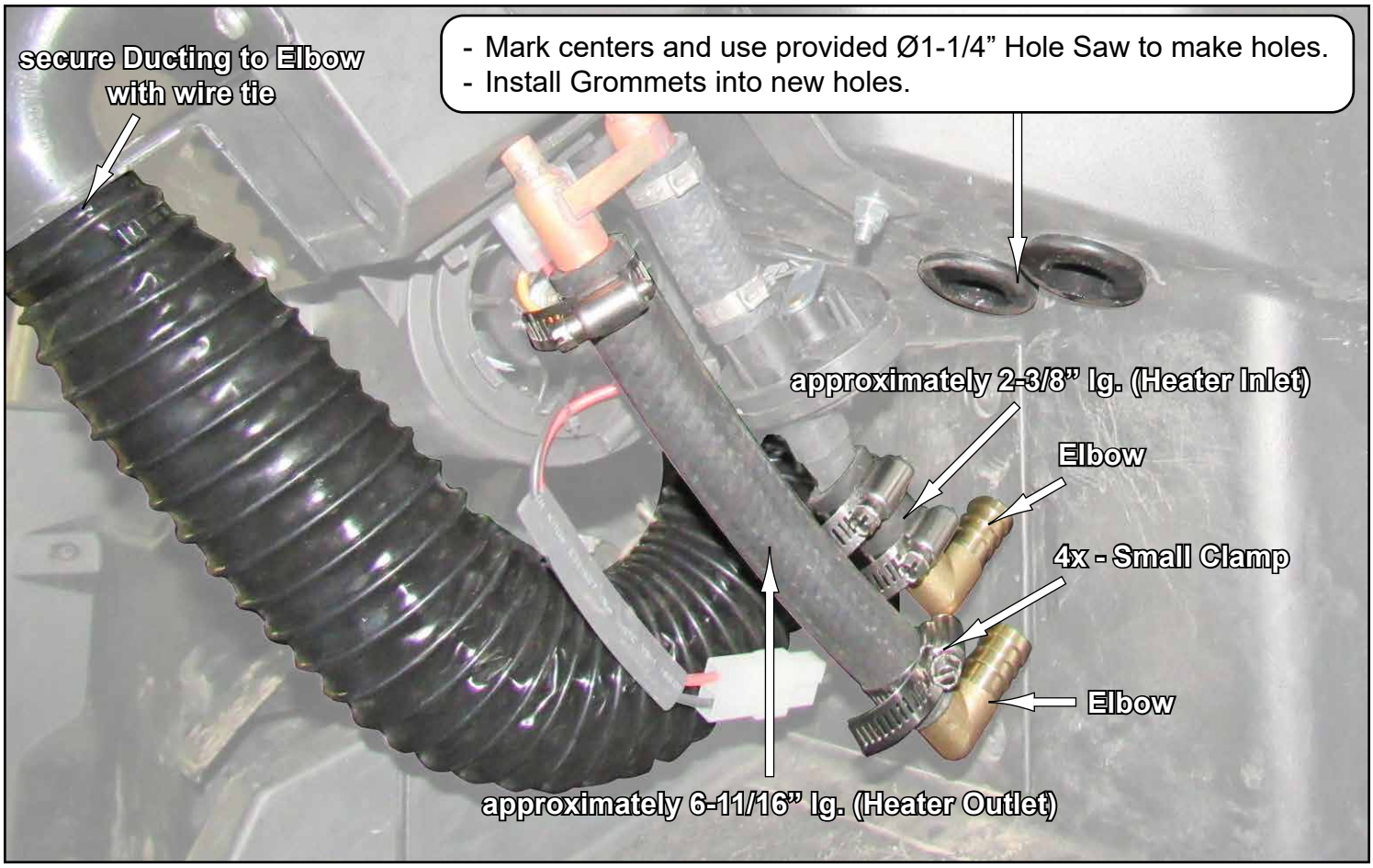

- Cut Tubing to lengths shown.
- Secure to Elbows with Small Clamps.
- Route Tubing to locations shown.

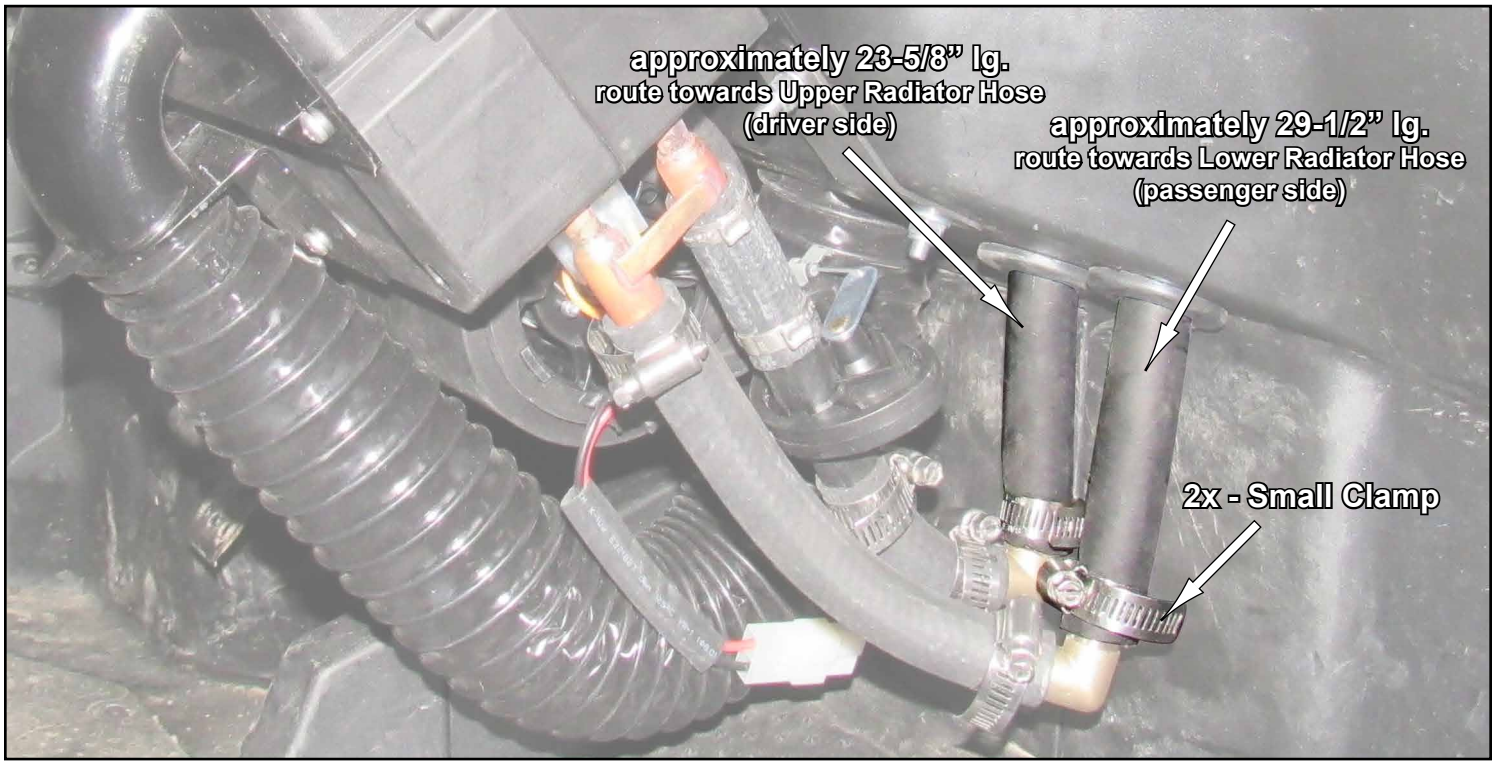

- Pull Ducting into areas shown.

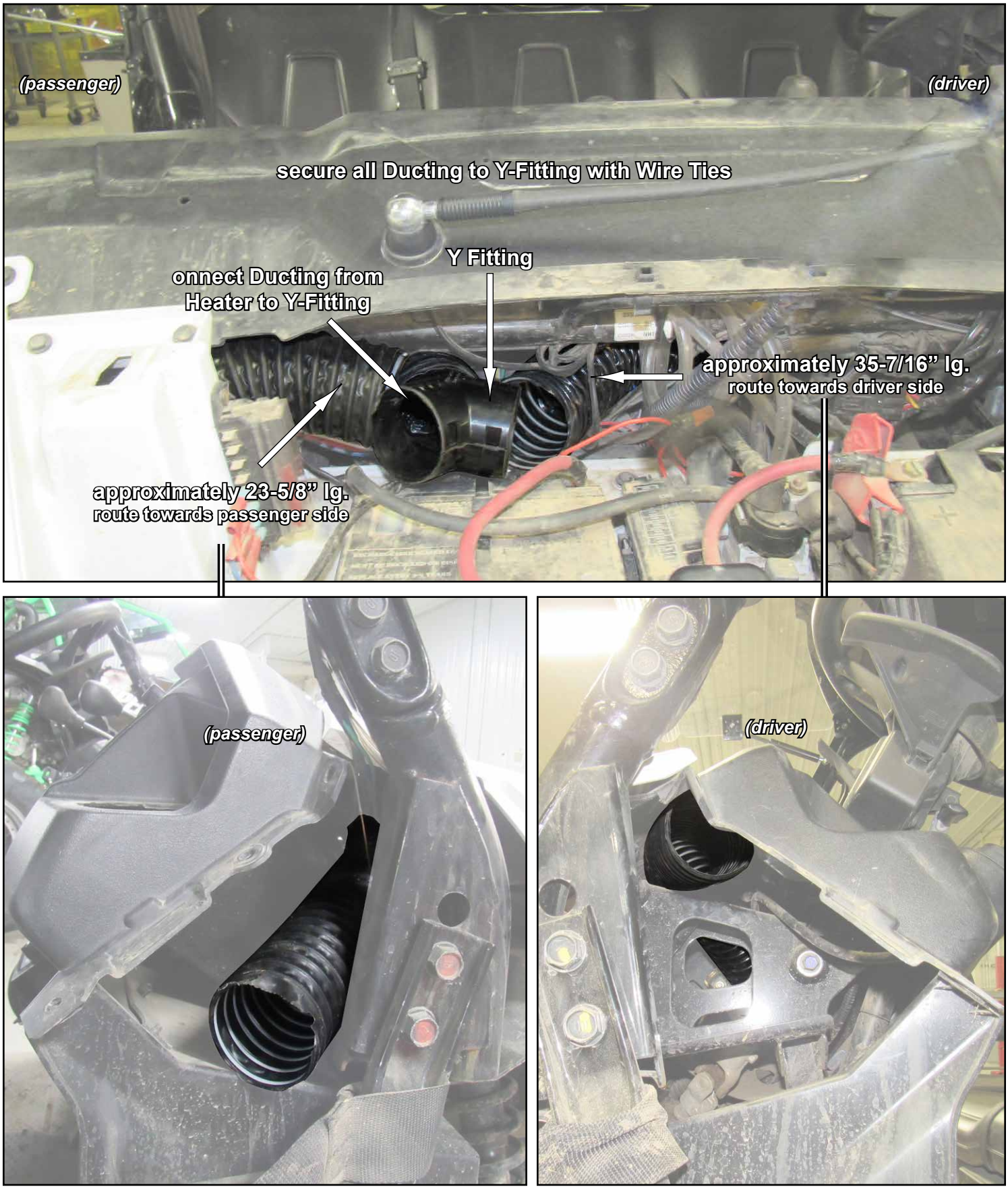

- Mark locations for Vents onto Dash and use provided Ø2-1/2” Hole Saw to make holes.
- Install Vents and secure to Ducting with provided Wire Ties.
- *Installer may locate Vents in a different location. Verify that Ducting will reach before drilling holes.*

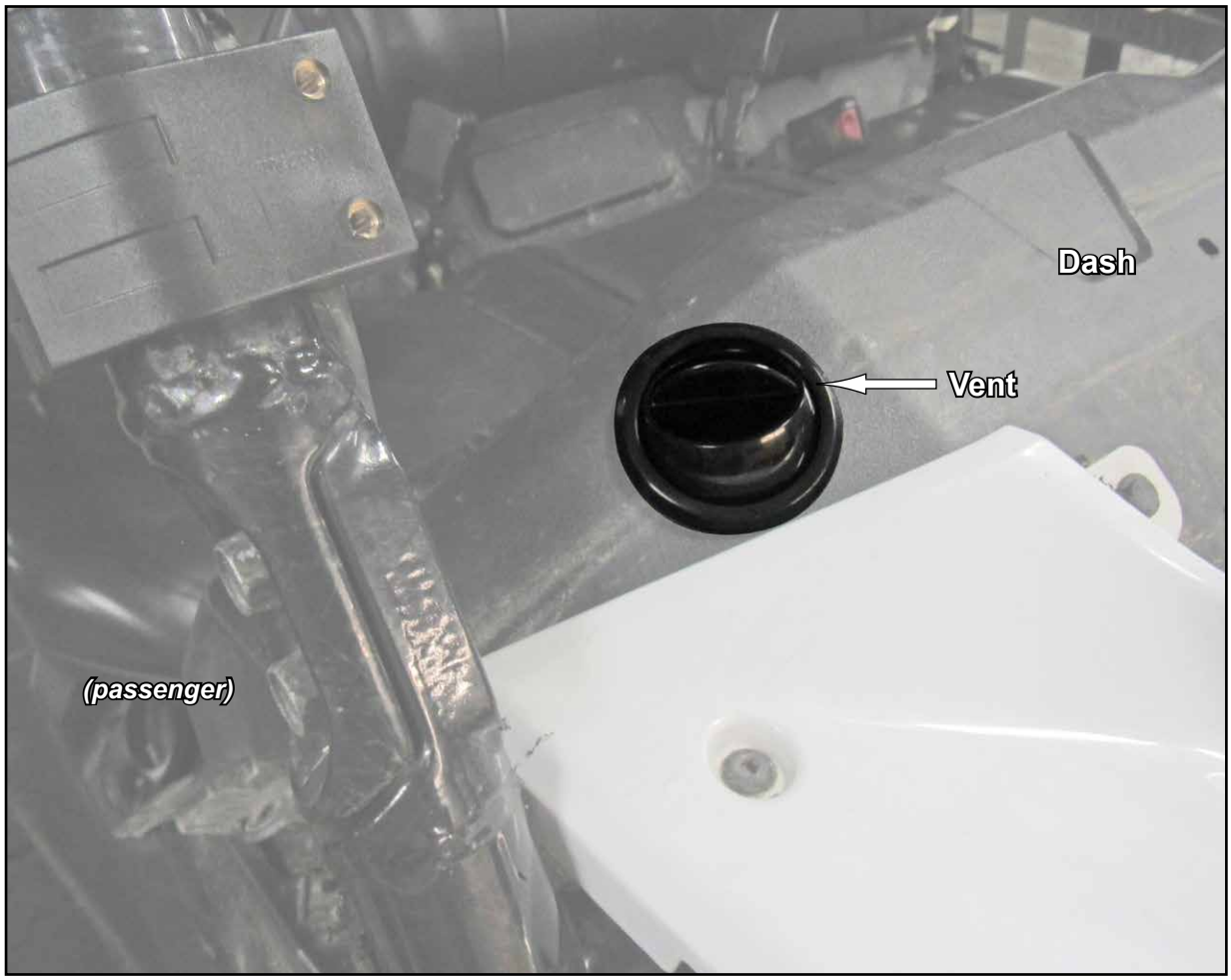



Wire Harness installation





- Raise front of vehicle and place on jack stands.
- Remove Lower Radiator Hose and drain coolant.

To prevent stock Radiator Hoses from being cut short, use provided Adapters as templates.

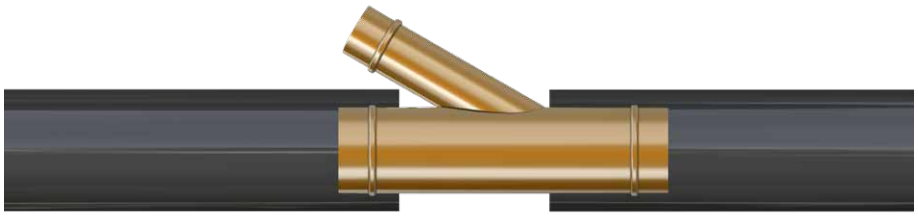

- Mark locations on stock Inlet Hose to be cut.
- Cut Hose and install Adapter.
- Secure with provided Large Clamps.
- Connect previously installed Inlet Tube to Adapter and secure with Small Clamp.

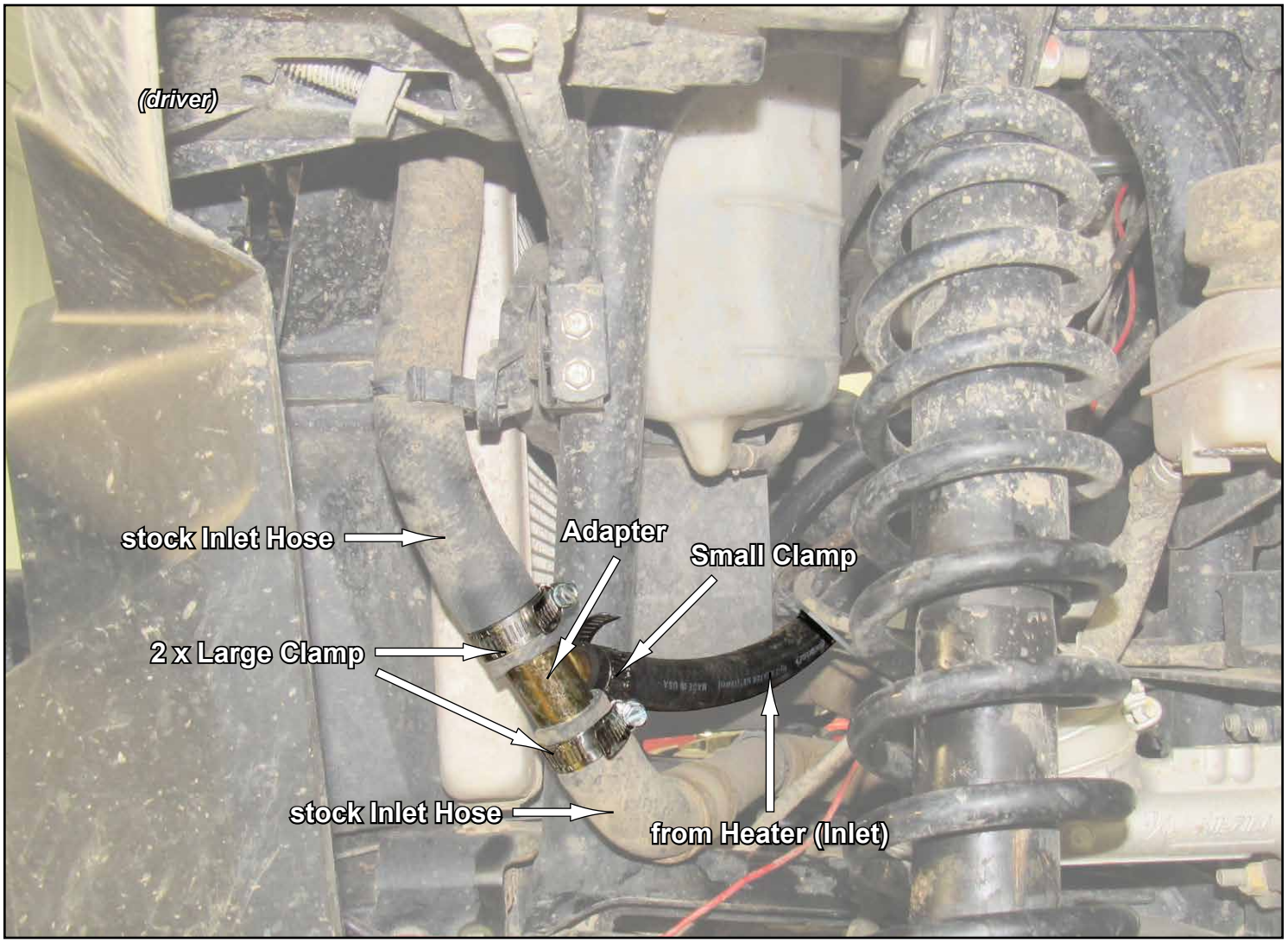

- Mark locations on stock Outlet Hose to be cut.
- Cut Hose and install Adapter.
- Secure with provided Large Clamps.
- Connect previously installed Outlet Tube to Adapter and secure with Small Clamp.

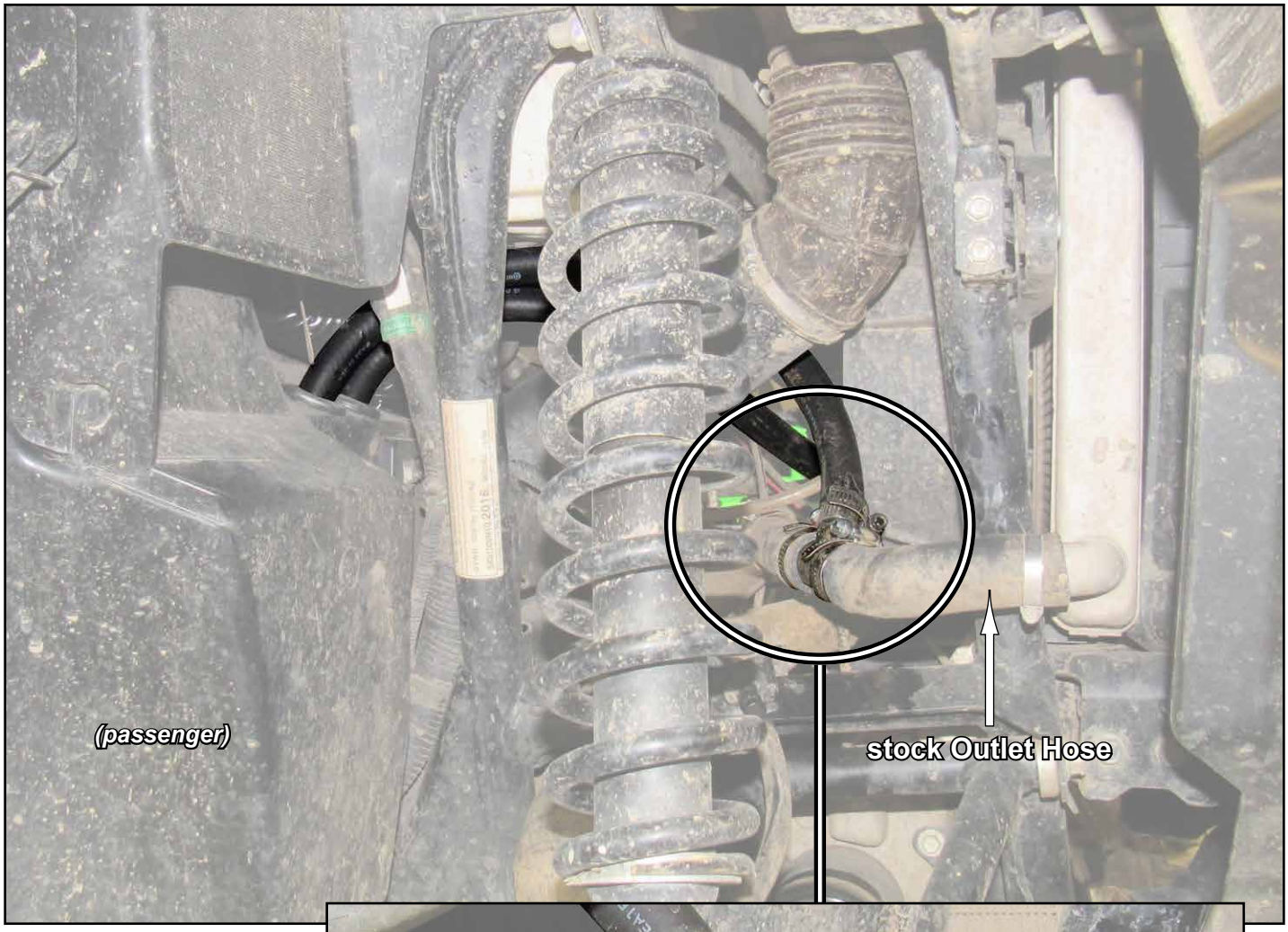

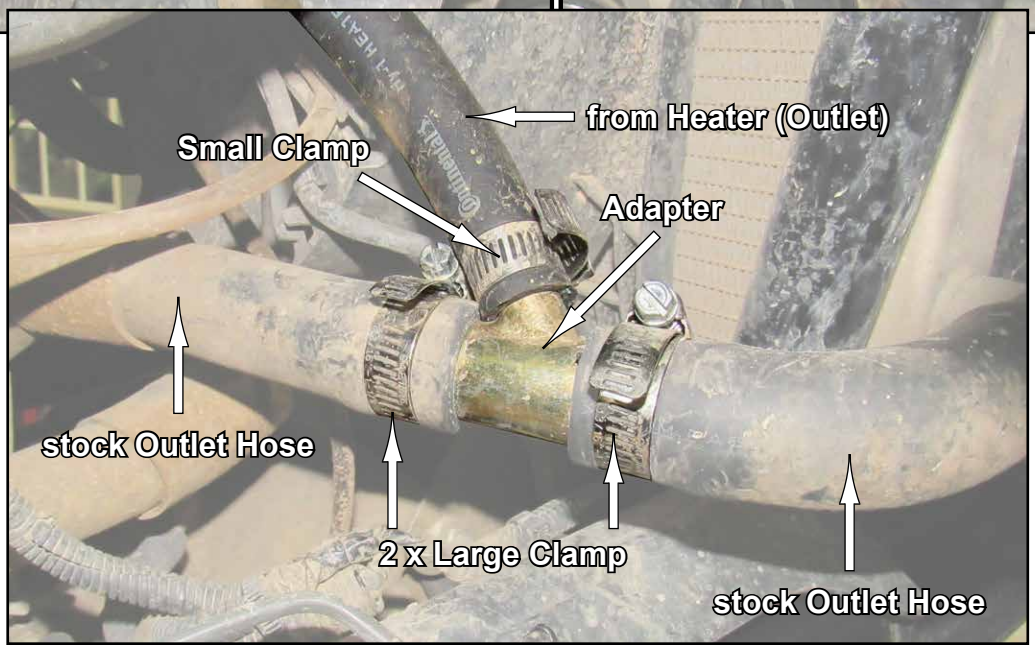

- Place machine back on ground.
- Fill coolant level to manufacturers recommended setting.
- Start machine and run at 3000 RPM until engine is hot.
- Use provided Hose Pliers and pinch off Inlet Hose as shown below.

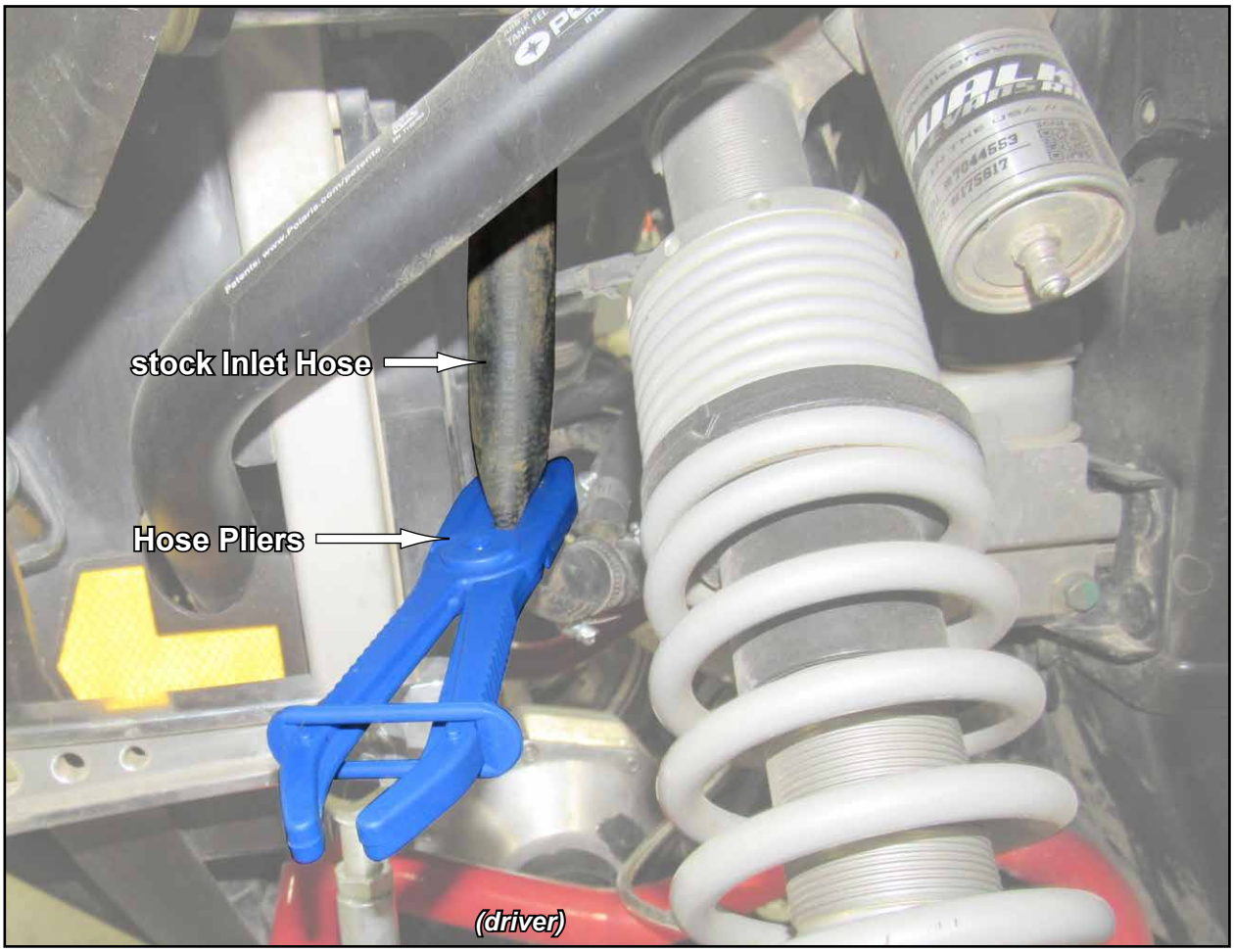

- Remove Hose Pliers after Radiator Fan turns ON.
- After Radiator Fan turns OFF, pinch Inlet Hose again and remove after Radiator Fan turns ON.
- Turn machine off and let engine completely cool; may take several hours.
- Check Coolant Level in Radiator and Resevoir; adjust as needed.
- Start machine and repeat “pinch” steps again.