2753 Michigan Road • Madison, Indiana 47250 • 855-743-3427

INSTALLATION INSTRUCTIONS

DOJ Inner CV Replacement

Verify that correct Replacement Kit is being installed; compare Axle and Kit numbers with chart located at SuperATV.com





Visit SuperATV.com for installation video.

Liability Statement

SuperATV's® products are designed to best fit user's ATV/UTV under stock conditions. Adding, modifying, or fabricating any factory or aftermarket parts will void any warranty provided by SuperATV® and is not recommended. SuperATV's® products could interfere with other aftermarket accessories. If user has aftermarket products on machine, contact SuperATV® to verify that they will work together.

Although SuperATV® has thousands of satisfied customers, user should be aware that installing lift kits, long travel, or suspension kits, tires, etc. will change the ride of machine and may increase maintenance and part wear. Operating any off-road machine while, or after, consuming alcohol and/or drugs increases risk of bodily harm or death. No warranty or representation is made as to this product's ability to protect user from severe injury or death. SuperATV® urges operators and occupants to wear a helmet and appropriate riding gear at all times.

By purchasing and installing SuperATV® products, user agrees that should damages occur, SuperATV® will not be held responsible for loss of time, use, labor fees, replacement parts, or freight charges. SuperATV®, nor any 3rd party, will not be held responsible for any direct, indirect, incidental, special, or consequential damages that result from any product purchased from SuperATV®. The total liability of seller to user for all damages, losses, and causes of action, if any, shall not exceed the total purchase price paid for the product that gave rise to the claim.

SuperATV® will warranty only parts provided by SuperATV®. Any damage or problems with OEM housings, bearings, seals, or other manufacturers' products will not be covered by SuperATV®. SuperATV® parts and products are not warrantied if item was not installed properly, misused, or modified.

Installing, adding, modifying, or fabricating any factory or aftermarket product to your ATV/UTV may violate certain local, state, and federal laws. Be advised that laws vary depending on town, city, county, state, etc. Use of certain products on public streets, roads, or highways may be in violation law. The Buyer is solely and exclusively legally and personally responsible for any violation of the law by the installation or use of the product. You must abide by all local, state, and federal laws, including but not limited to vehicle safety, traffic laws, and ordinances. It is your responsibility to know the laws and how they apply to you.

The Buyer is responsible to fully understand the capability and limitations of his/her vehicle according to manufacturer specifications, warnings and instructions and agrees to hold SuperATV® harmless from any damage resulting from failure to adhere to such specifications, warnings and/ or instructions. The Buyer is also responsible to obey all applicable federal, state, and local laws and ordinances when operating his/her vehicle while using this product, and the Buyer agrees to hold SuperATV® harmless from any violation thereof.

Need help with your installation?

sales@superatv.com

www.superatv.com

1-855-743-3427

8:00am - 9:00pm EST M-Th
8:00am - 7:00pm EST Friday
9:00am - 2:00pm EST Saturday

Read instructions and view illustrations before beginning.

Thank You For Choosing SUPERATV.COM®

© 2017 SuperATV.com®. All Rights Reserved.

DOJ removal:

- Secure Axle in a Vise and thouroughly clean debris from CV.

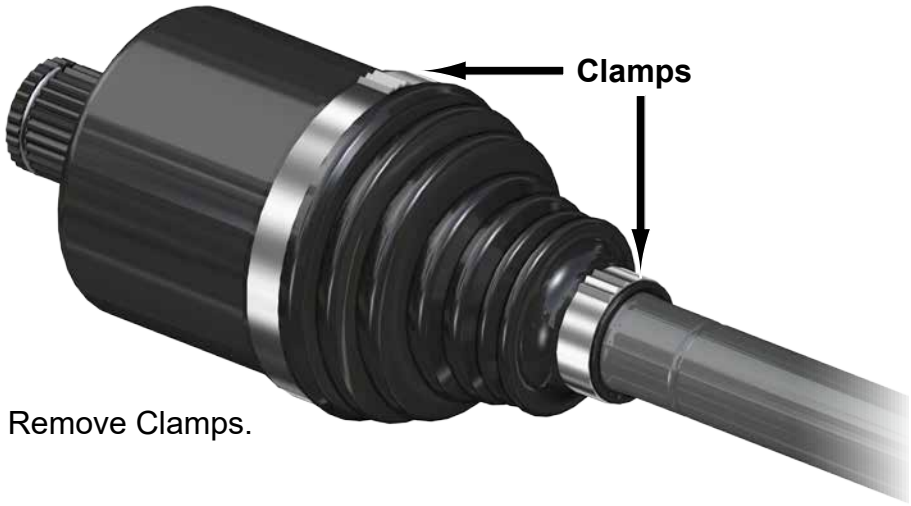

- Remove Clamps.

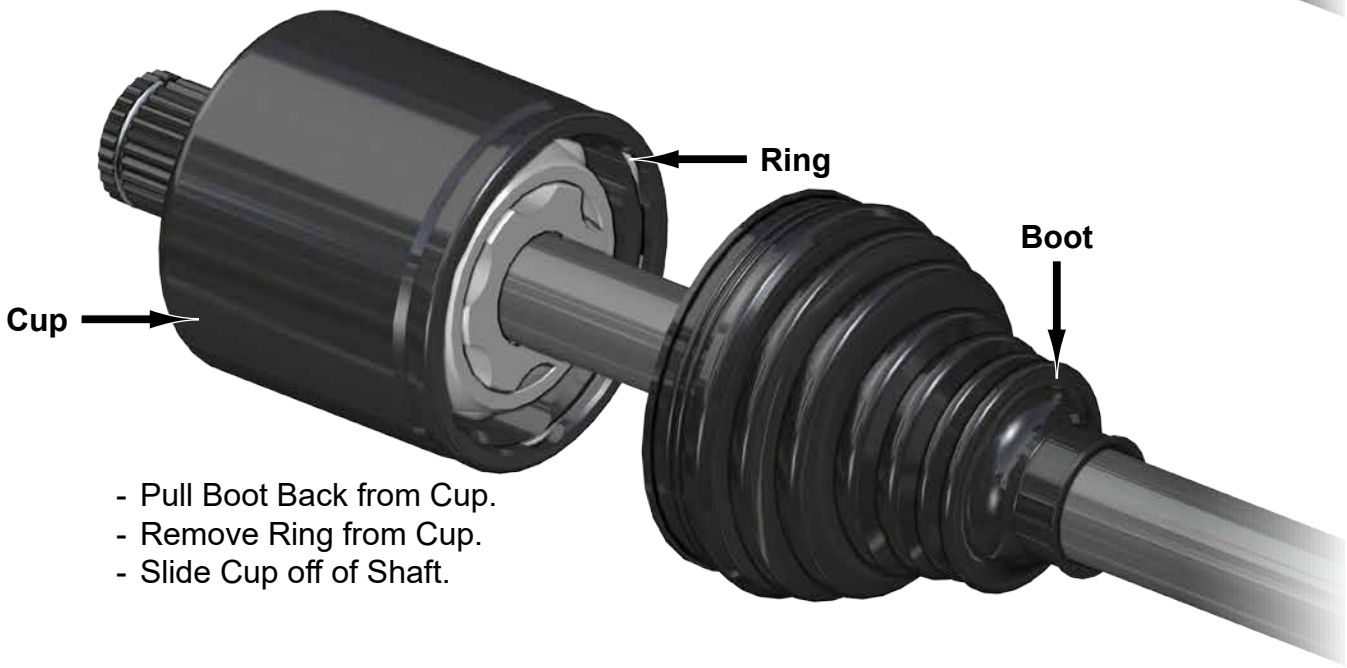

- Pull Boot Back from Cup.
- Remove Ring from Cup.
- Slide Cup off of Shaft.



- Remove Balls from Cage.

DOJ removal continued:



- Slide Cage towards Boot.



- Tap Spider firmly with a hammer and brass punch to remove.



- Remove C-Clip and Cage.



- Remove Boot.

DOJ installation:

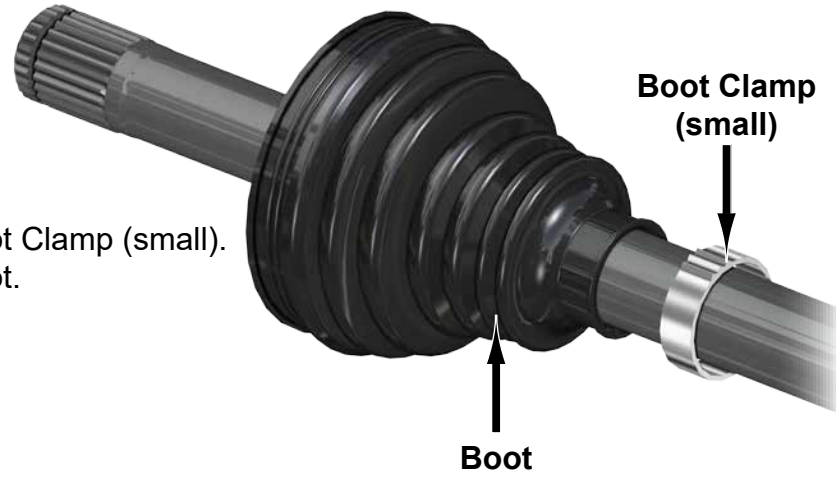

- Install Boot Clamp (small).
- Install Boot.

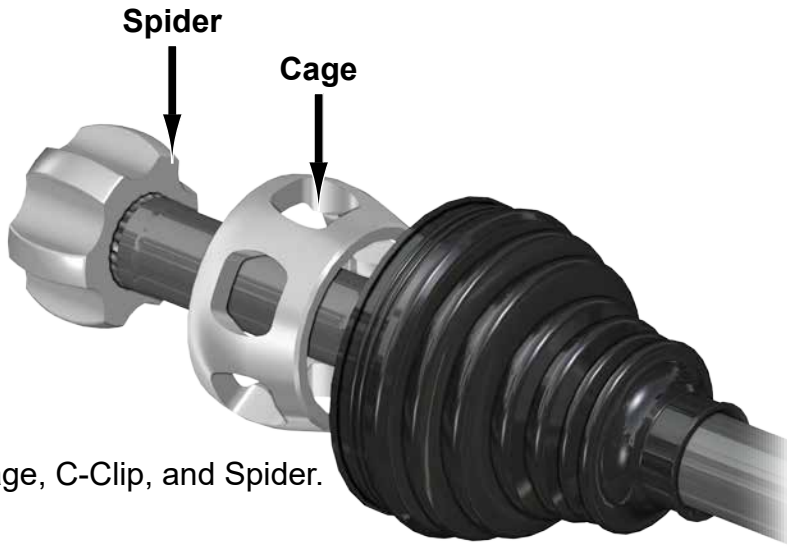

- Install Cage, C-Clip, and Spider.

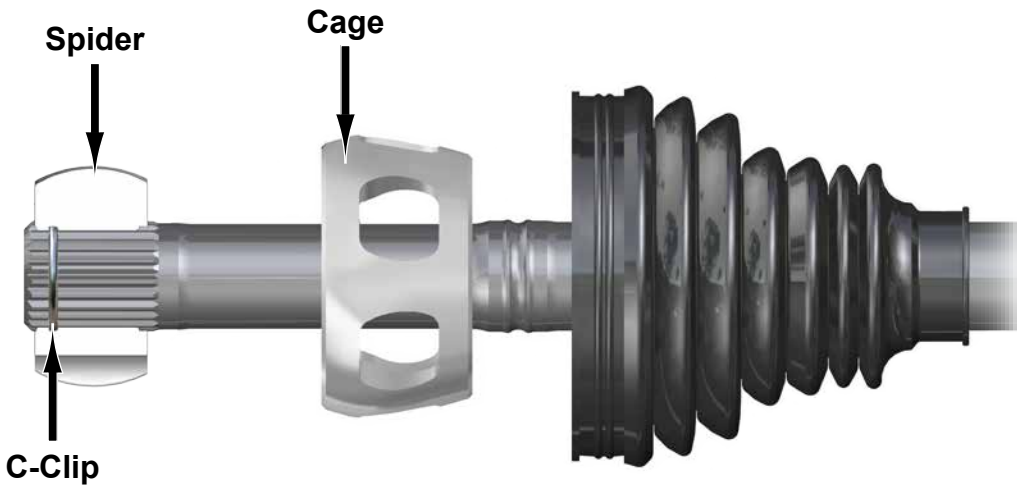

- Groove in Spider must lock with C-Clip.
- Note orientation of Cage.

DOJ installation continued:



- Slide Cage onto Spider.



- Empty entire Grease packet into Cup.



- Install Balls to Cage



- Drive Cup into place with a soft faced hammer.
- Install Ring into groove on Cup after Cup is installed on Axle.
- Give Cup a small tug to verify it's secure.

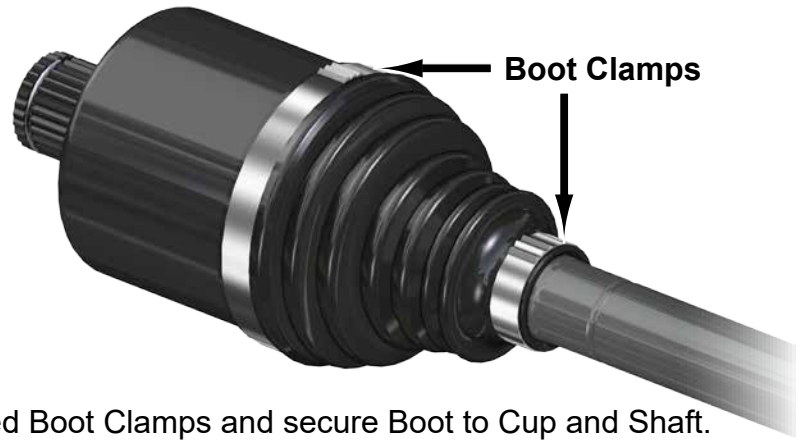

- Use provided Boot Clamps and secure Boot to Cup and Shaft.