2753 Michigan Road • Madison, Indiana 47250 • 855-743-3427

INSTALLATION INSTRUCTIONS

6” Lift Kit: for Polaris Ranger® 500/800 model years 2009 - 2014

Item	Description
J	Lower Front A-Arm (R)
K	Lower Front A-Arm (L)
L	Upper Front A-Arm (R)
M	Upper Front A-Arm (L)

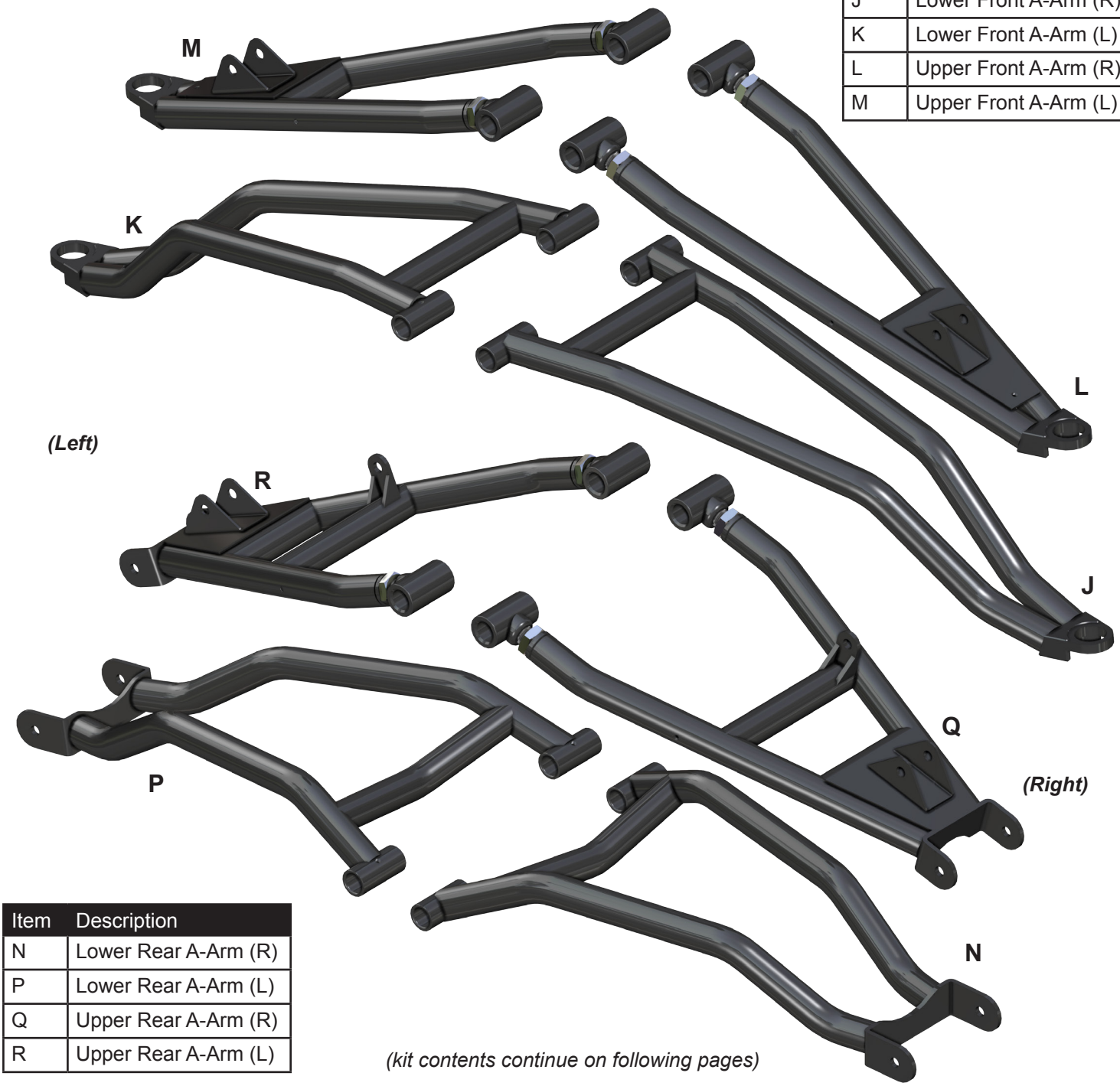

Item	Description
N	Lower Rear A-Arm (R)
P	Lower Rear A-Arm (L)
Q	Upper Rear A-Arm (R)
R	Upper Rear A-Arm (L)

(kit contents continue on following pages)

Need help with your installation?

sales@superatv.com

www.superatv.com

1-855-743-3427

8:00am - 9:00pm EST M-Th
8:00am - 7:00pm EST Friday
9:00am - 2:00pm EST Saturday

Read instructions and view illustrations before beginning.

Thank You For Choosing

© 2013 SuperATV.com® All Rights Reserved.

Rev IN-LK-P-RAN09-6-002 10/17/2019

(kit contents continued)

Item	Description
A	Shock Bracket Support
B	Front Bracket (Passenger Fore)
C	Front Bracket (Passenger Aft)
D	Front Bracket (Passenger Fore)
E	Front Bracket (Passenger Aft)

Item	Description
T	Rear Bracket (Passenger Fore)
U	Rear Bracket (Passenger Aft)
V	Rear Bracket (Driver Fore)
W	Rear Bracket (Driver (Aft)

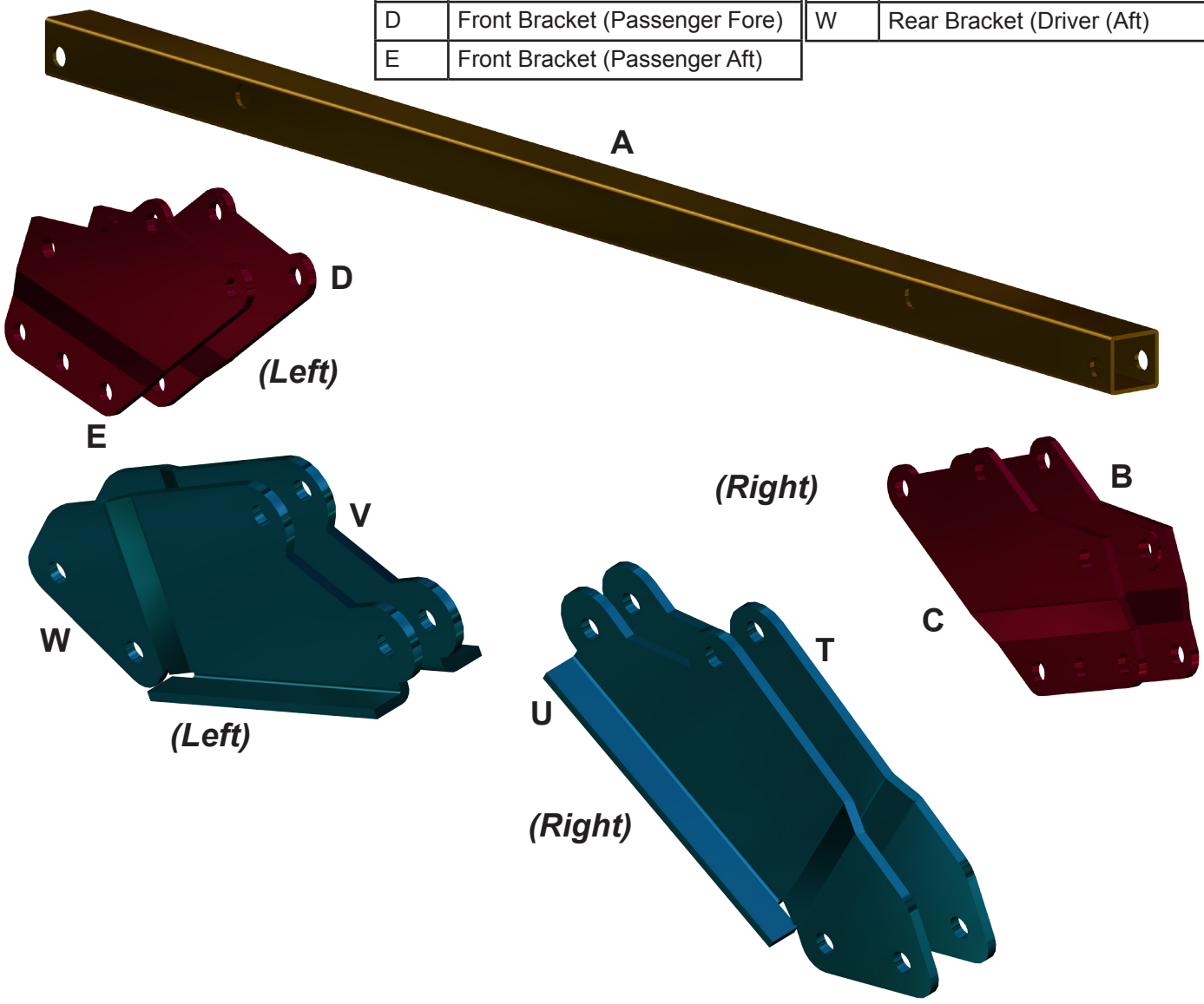

Liability Statement

SuperATV's® products are designed to best fit user's ATV/UTV under stock conditions. Adding, modifying, or fabricating any factory or aftermarket parts will void any warranty provided by SuperATV® and is not recommended. SuperATV's® products could interfere with other aftermarket accessories. If user has aftermarket products on machine, contact SuperATV® to verify that they will work together.

Although SuperATV® has thousands of satisfied customers, user should be aware that installing lift kits, long travel, or suspension kits, tires, etc. will change the ride of machine and may increase maintenance and part wear. Operating any off-road machine while, or after, consuming alcohol and/or drugs increases risk of bodily harm or death. No warranty or representation is made as to this product's ability to protect user from severe injury or death. SuperATV® urges operators and occupants to wear a helmet and appropriate riding gear at all times.

By purchasing and installing SuperATV® products, user agrees that should damages occur, SuperATV® will not be held responsible for loss of time, use, labor fees, replacement parts, or freight charges. SuperATV®, nor any 3rd party, will not be held responsible for any direct, indirect, incidental, special, or consequential damages that result from any product purchased from SuperATV®. The total liability of seller to user for all damages, losses, and causes of action, if any, shall not exceed the total purchase price paid for the product that gave rise to the claim.

SuperATV® will warranty only parts provided by SuperATV®. Any damage or problems with OEM housings, bearings, seals, or other manufacturers' products will not be covered by SuperATV®. SuperATV® parts and products are not warrantied if item was not installed properly, misused, or modified.

Installing, adding, modifying, or fabricating any factory or aftermarket product to your ATV/UTV may violate certain local, state, and federal laws. Be advised that laws vary depending on town, city, county, state, etc. Use of certain products on public streets, roads, or highways may be in violation law. The Buyer is solely and exclusively legally and personally responsible for any violation of the law by the installation or use of the product. You must abide by all local, state, and federal laws, including but not limited to vehicle safety, traffic laws, and ordinances. It is your responsibility to know the laws and how they apply to you.

The Buyer is responsible to fully understand the capability and limitations of his/her vehicle according to manufacturer specifications, warnings and instructions and agrees to hold SuperATV® harmless from any damage resulting from failure to adhere to such specifications, warnings and/ or instructions. The Buyer is also responsible to obey all applicable federal, state, and local laws and ordinances when operating his/her vehicle while using this product, and the Buyer agrees to hold SuperATV® harmless from any violation thereof.

Item	Description	Qty
-	Grease Fittings	16
H	Brake Line Clamps	4
BB	Tie Rod Kit	1
CC	Brake Line Clips	2
DD	Front Brake Lines	2
EE	Rear Brake Lines	2
FF	Differential Spacer Kit	1





16x - 90° Fitting

(kit contents continued)

Tie Rod Kit (BB)
(See Page 7)



Differential Spacer Kit (FF)

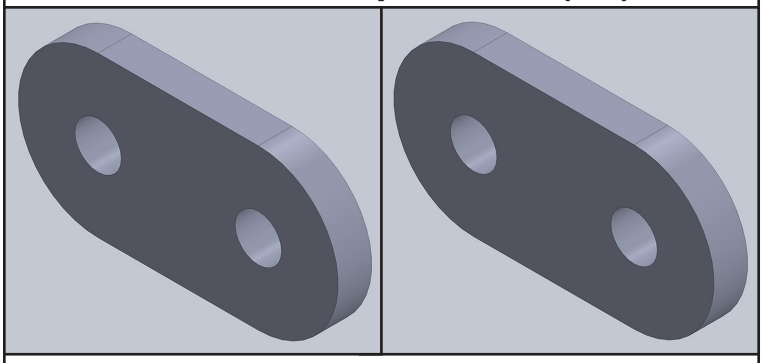

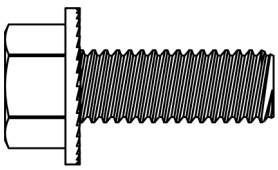

3/8”x 1” Lg. Serrated FHCS
Qty. (4)

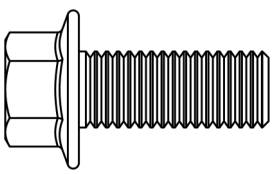

M10 x 25mm Lg. FHCS
Qty. (4)

Brake Line Kit:

Brake Line Locations	Approximate Length:
Left Front	33-15/16”
Right Front	47-15/16”
Left Rear	40-3/4”
Right Rear	51-1/2”

Fronts have same style fitting at each end

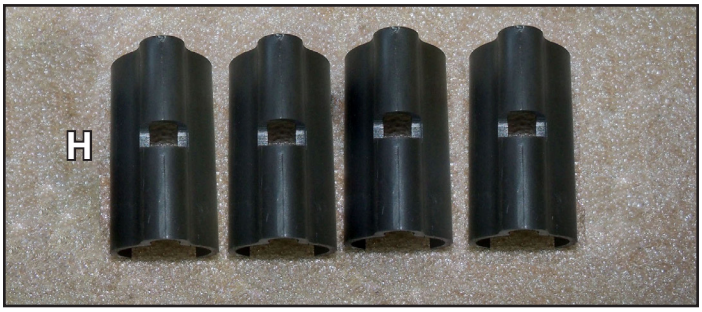

Keep all components removed from machine. Do not tighten hardware competely unless noted.

FRONT DISASSEMBLY:

1. Raise front of machine off ground, secure with jack stands,and remove Wheels, Brake Calipers and Brake Lines, Tie Rods, Hubs, Shocks, A-Arms, and Axles.

FRONT ASSEMBLY:

1. Slide Shock Bracket Support (A) through factory Shock Mount and insert 32mm Lg. Spacers (F) into each end. See Page 6, Figs. 1 - 1c.
- Install Front Brackets (B)(C) to Shock Bracket Support (A) and secure with M10-1.50 x 60mm Lg. HHCS (X) and M10-1.50 Nylock Nuts (Y). See Page 6, Figs. 1 - 1c.
- Repeat for opposite side.
2. Install optional Steering Stop Kit to Rack and Pinion. Kit prevents over extension of Axles, when reversing under hard throttle, by limiting steering range. See Page 8.
3. Install Tie Rods (BB). See Page 8.
4. Install Differential Spacer Kit (FF). See Page 9.
- Install new Axles.
5. Install stock Ball Joints, Bearings, and Fittings into Front A-Arms (J-M).
- Install Front A-Arms (J-M) to machine with stock hardware. ***Do not install any Nuts until all final adjustments have been completed.*** See Page 10.
5. Determine lift setting and install Shocks to Front Brackets with stock hardware. See Page 6, Fig. 1c.
- Install Shocks to Front A-Arms with stock hardware. ***Do not install any Nuts until all final adjustments have been completed.*** See Page 10, Fig. 2a.
6. Reinstall Hubs and Tires; check Camber settings; see last page.
- Install Calipers and Front Brake Lines (DD) and secure to A-Arms with Brake Line Clips (CC), Brake Line Clamps (H), and M5-.80 x 13mm Lg. PHMS (S). Ensure no binding can occur when machine is in use. See Page 10, Fig. 2c.
7. Add Nuts to previously installed hardware and tighten all completely. SuperATV recommends using Loc-Tite on Nuts.

REAR DISASSEMBLY:

1. Raise rear of machine off ground, secure with jack stands,and remove Wheels, Brake Calipers and Brake Lines, Hubs, and Shocks. Disconnect Sway Bar Links from A-Arms; remove A-Arms.

REAR ASSEMBLY:

1. Install Rear Brackets and 21mm Lg. Spacers (AA) to insides of stock Shock Mounts. Secure with M10-1.50 x 55mm Lg. FHCS (Z) and M10-1.50 Nylock Nuts (Y). See Page 11, Figs. 3 - 3b.
- Repeat for opposite side.
2. Install stock Bearings and 90° Fittings into Rear A-Arms (N-R). See Page 13, Fig. 4.
- Install Rear A-Arms (N-R) to machine with stock hardware.***Do not install any Nuts until all final adjustments have been completed.*** See Page 13, Fig. 5.
- Install new Axles.
3. Determine lift setting and install Shocks to Rear Brackets with M10-1.50 x 55mm Lg. FHCS (Z) and M10-1.50 Nylock Nuts (Y). See Page 11, Fig. 3b.
- Install Shocks to Rear A-Arms with M10-1.50 x 55mm Lg. FHCS (Z). ***Do not install any Nuts until all final adjustments have been completed.***
4. Reinstall Sway Bar Links to A-Arms with M10-1.50 x 55mm Lg. FHCS (Z). ***Do not install any Nuts until all final adjustments have been completed.*** See Page 13, Fig. 5.
5. Reinstall Hubs and Tires; check Camber settings; see last page.
- Install Calipers and Rear Brake Lines (EE) and secure to A-Arms with Brake Line Clamps (H) and M5-.80 x 13mm Lg. PHMS (S). Ensure no binding can occur when machine is in use. See Page 13, Fig. 5.
6. Add Nuts to previously installed hardware and tighten all completely. SuperATV recommends using Loc-Tite on Nuts.

PIVOT BLOCK SETTINGS

- Place new A-Arms onto a flat surface and verify dimension shown.
- *Negative 1° camber setting is achieved when Pivot Blocks are set to this dimension.*
- See last page for additional camber information.

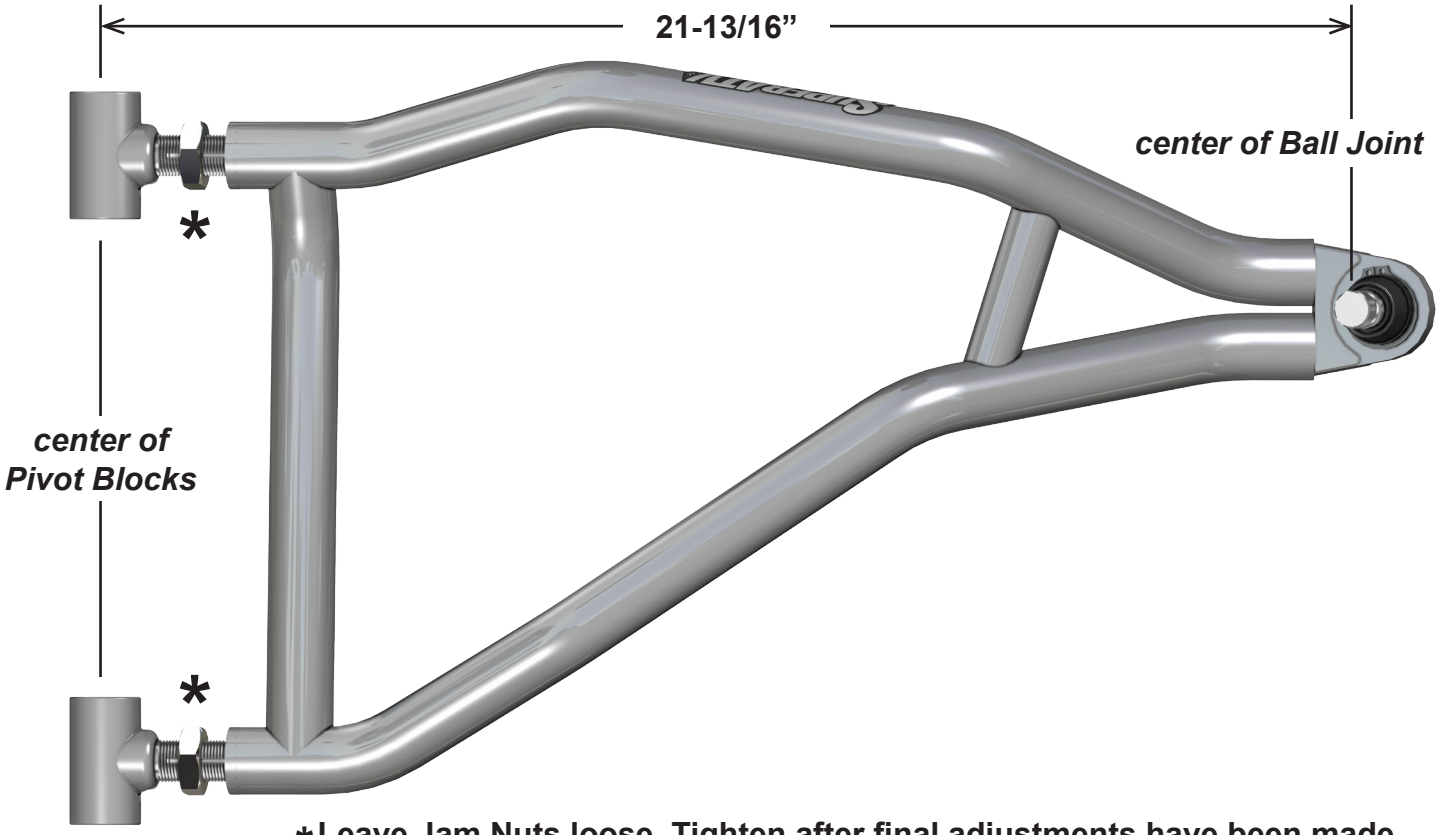

∗**Leave Jam Nuts loose. Tighten after final adjustments have been made.**

Front Bracket Mounting

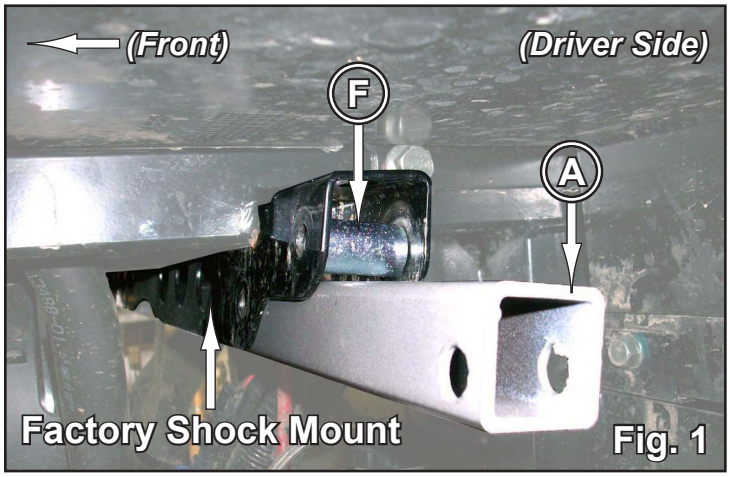

Fig. 1

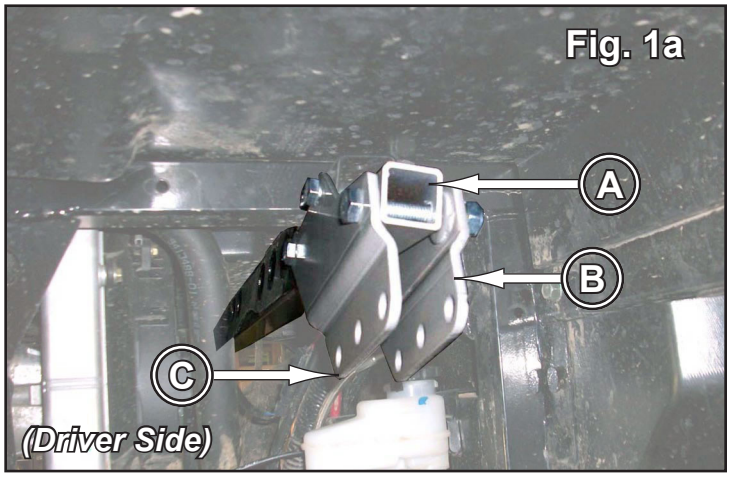

Fig. 1a

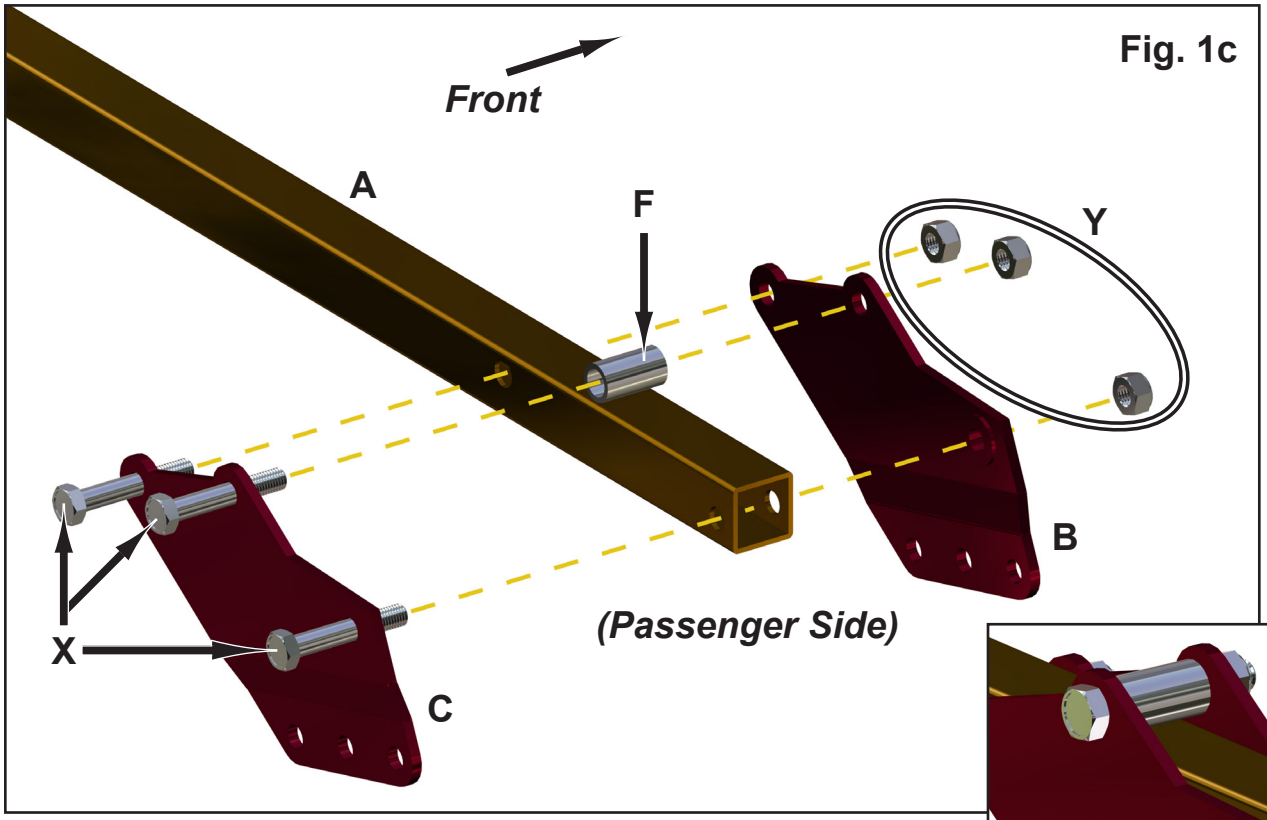

Fig. 1c


Highest Lift

X 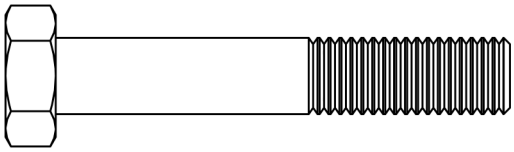 M10 x 60mm Lg. HHCS

Y 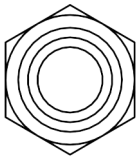 M10 Nylock Nut

F 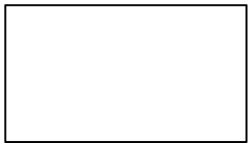 Ø18mm OD x 32mm Lg. Spacer

(instructions continue on following pages)

If installing Steering Stop, install Tie Rods *before* reinstalling Boots and Wire Ties

Steering Stop Installation *(Rack and Pinion shown off machine for clarity)*

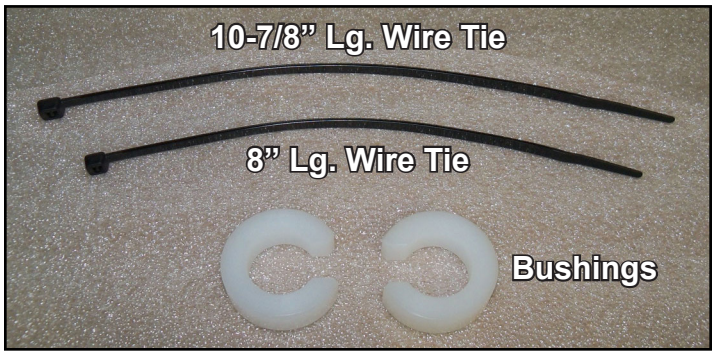

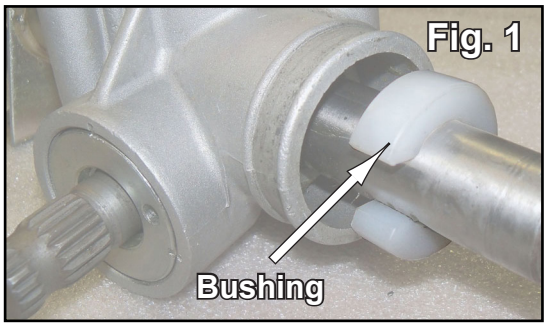

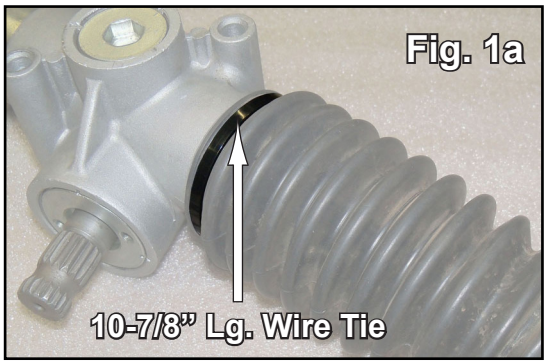

Note: Driver Side installation is shown.

1. Unclamp and slide Boot away from Steering Gear Box.
2. Install Bushings onto shaft. See Fig. 1.
3. Reinstall Boot with 10-7/8” Lg. Wire Tie. See Fig. 1a.

- Repeat steps for opposite side.

(instructions continue on following pages)

Tie Rod Installation *(Rack and Pinion shown off machine for clarity)*

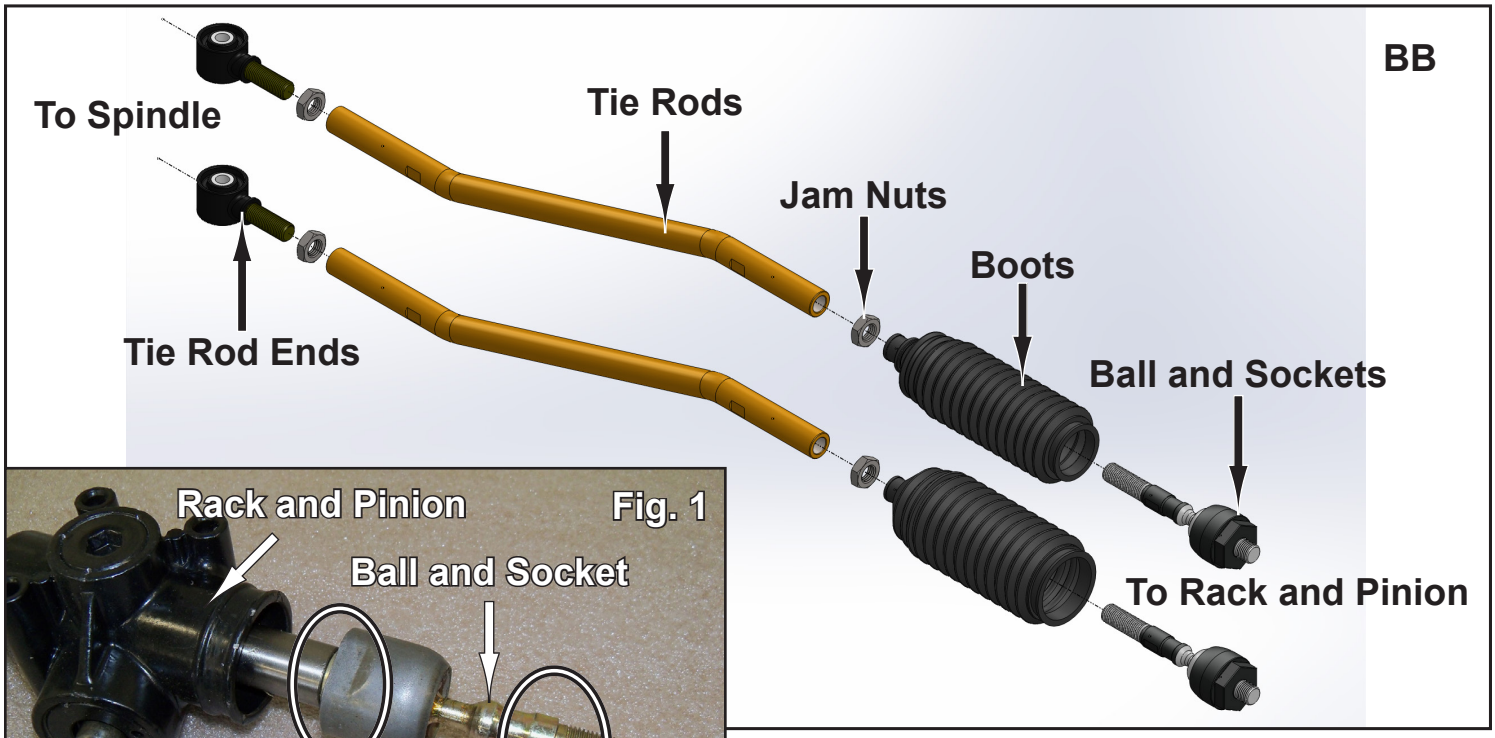

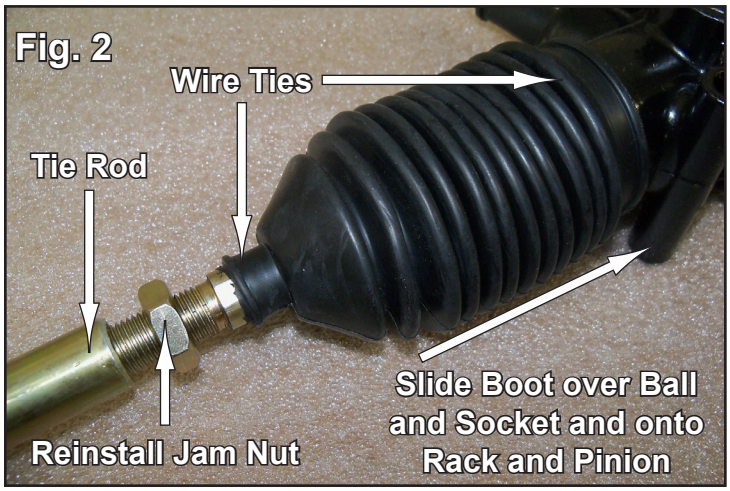

1. Install Ball and Socket to Rack and Pinion. Use Loctite. See Fig. 1.
2. Remove, and keep, Jam Nut from Ball and Socket. See Fig. 1.
3. Reinstall stock Rubber Boot as shown in Fig. 2. Use a lubricant to ease installation.
4. Reinstall Jam Nut and install Tie Rod Shaft to Ball and Socket. See Fig. 2.
5. Secure stock Rubber Boot with Wire Ties. See Fig. 2.
6. Install supplied Tie Rod End to Tie Rod Shaft.
7. Repeat steps for opposite side.

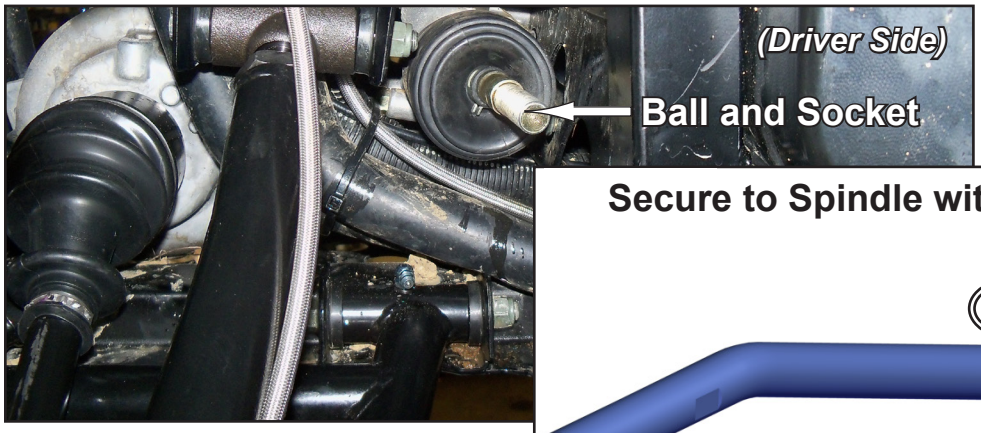

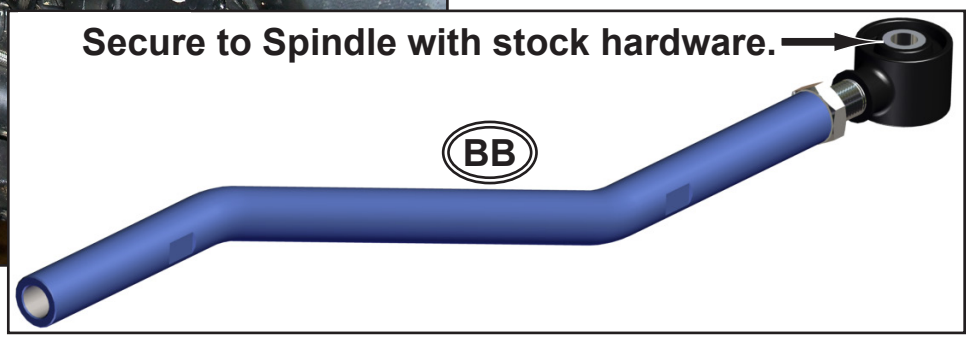

(instructions continue on following pages)

Differential Spacer Installation

1 Remove (4) bolts holding Front Differential to Frame.

2. Pry Differential up and slide Differential Spacers underneath Differential. Determine correct hardware, see “Differential Spacer Kit” below, and secure Differential Spacers. Tighten hardware completely.

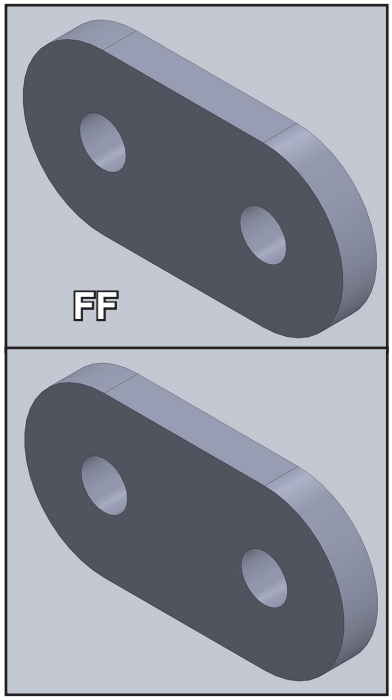

Differential Spacer Kit (FF)

2013 and Newer:

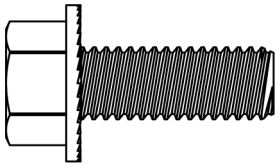

3/8”x 1” Lg. Serrated FHCS
Qty. (4)

2012 and Older:

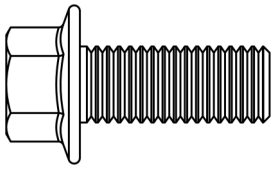

M10 x 25mm Lg. FHCS
Qty. (4)



Bolts should thread easily into Differential. If resistance occurs, stop and use other bolts included with kit.

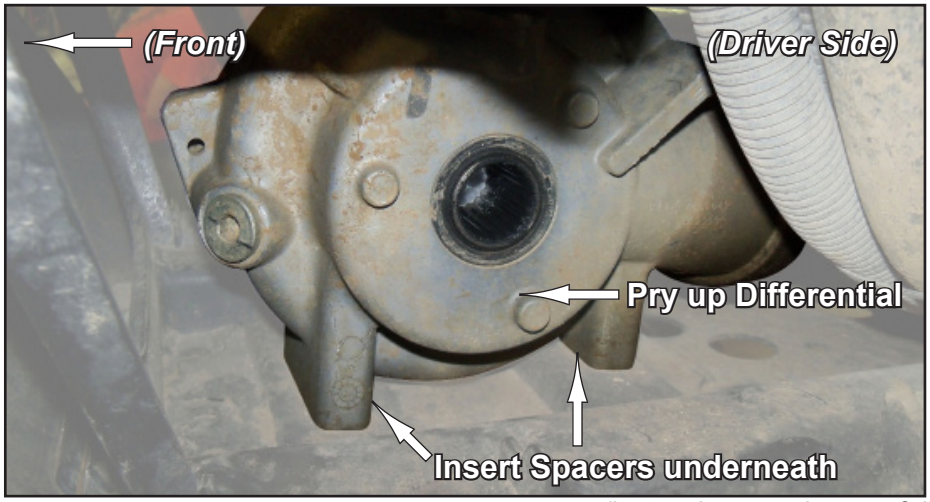

(instructions continue on following pages)

Front A-Arms Mounting

Fig. 2

(Left)

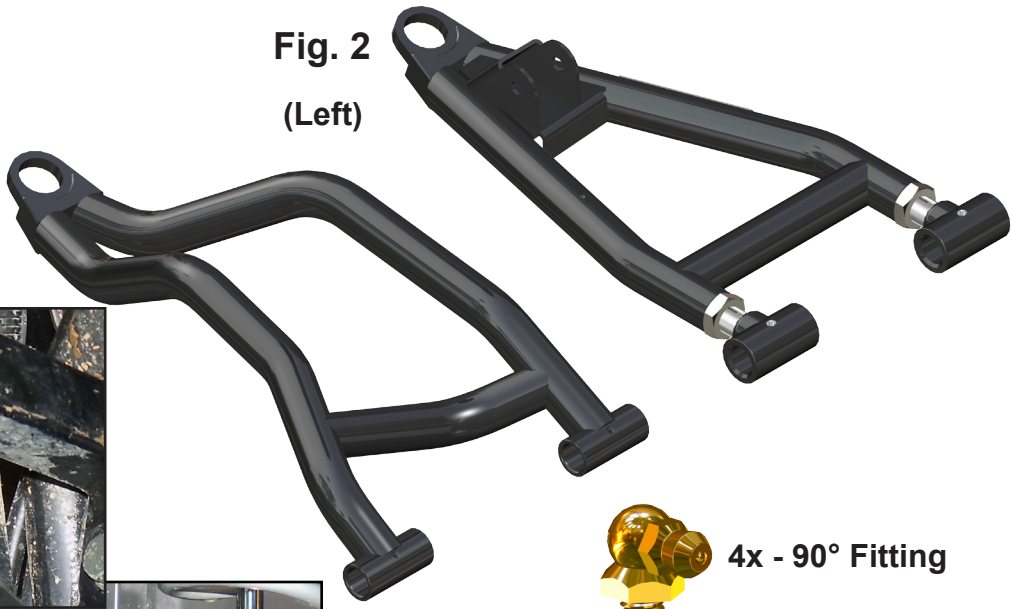

4x - 90° Fitting

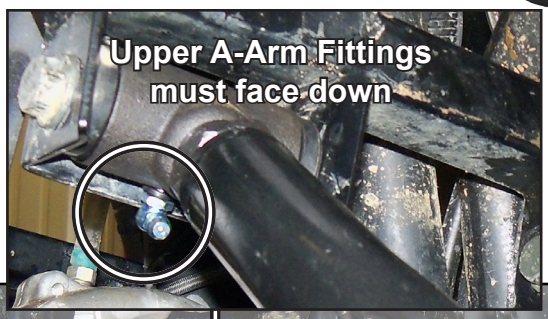

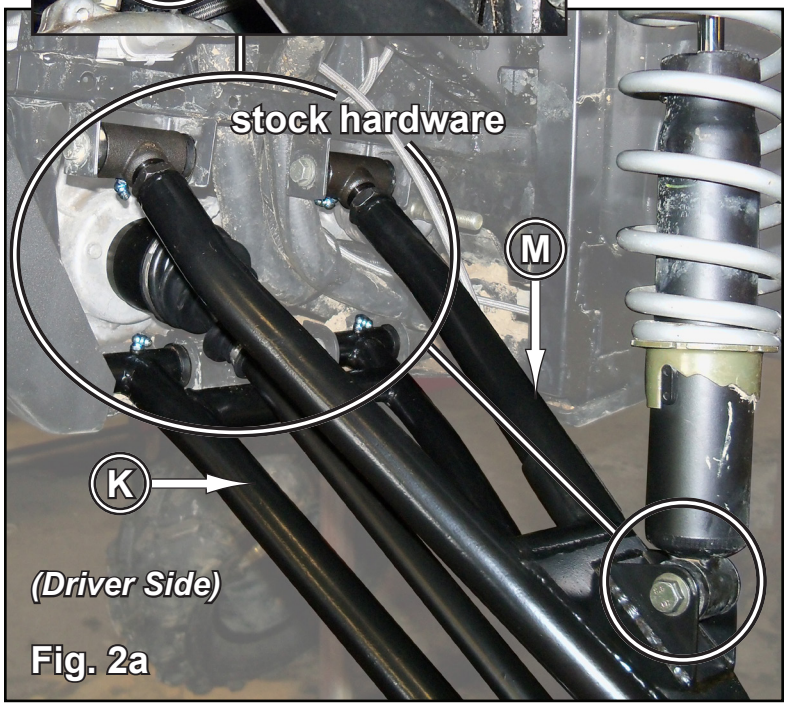

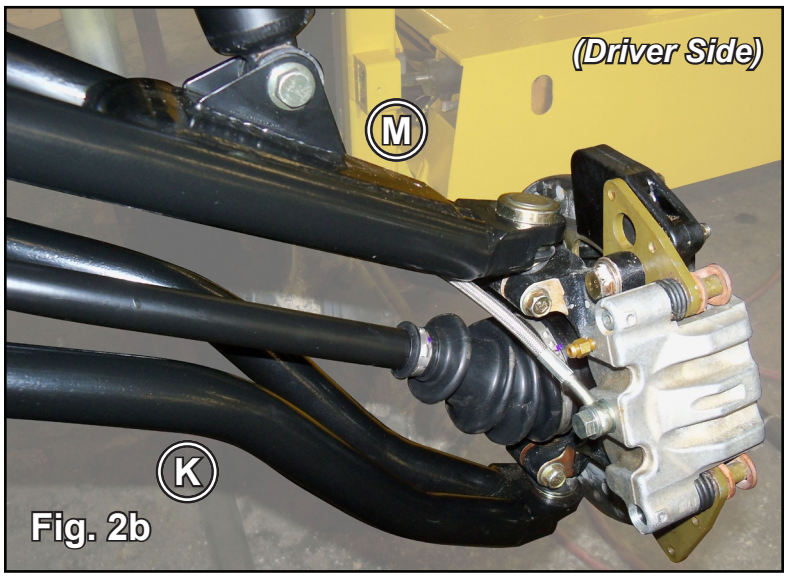

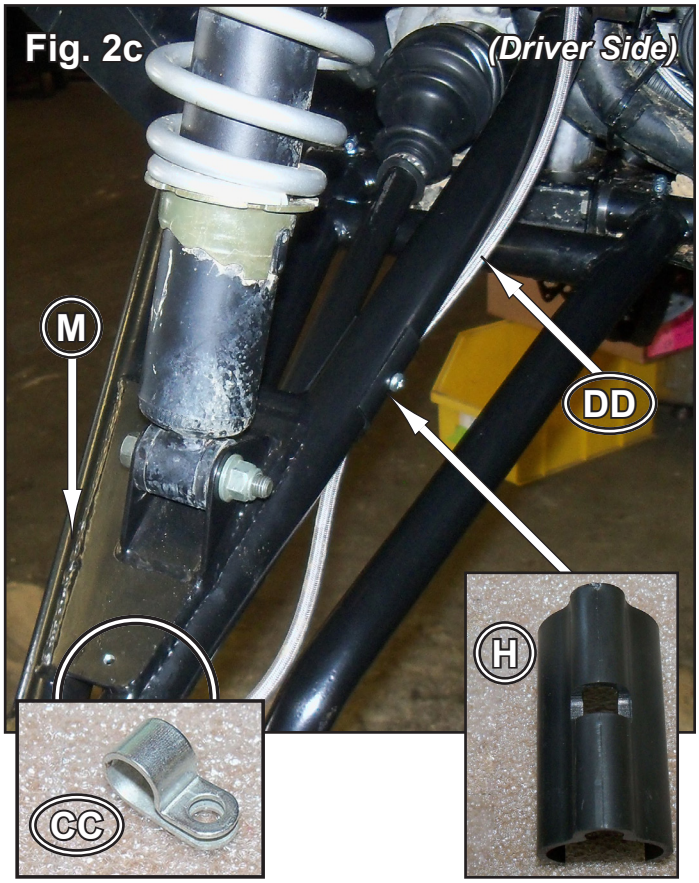

S 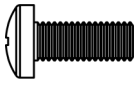 M5 x 13mm Lg. PHMS

Rear Bracket Mounting

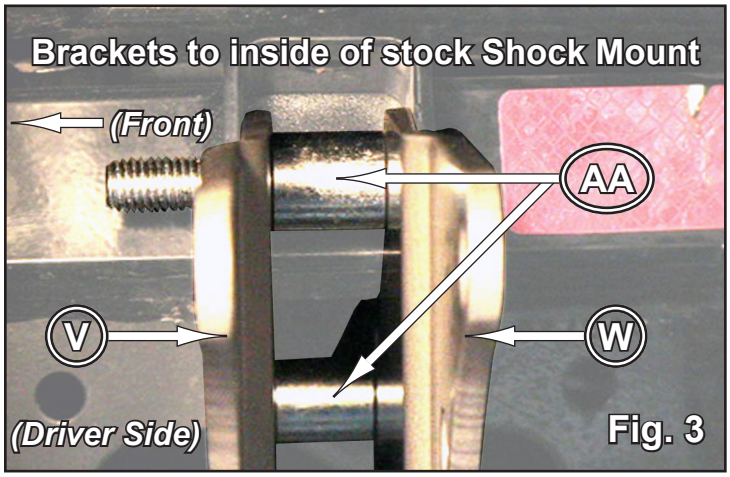

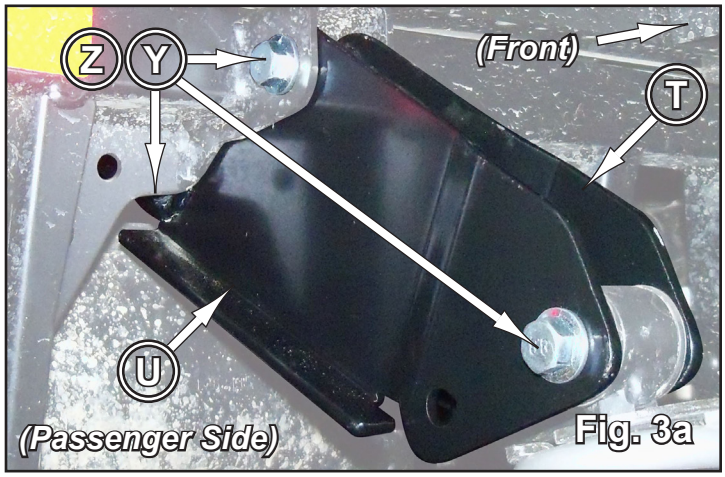

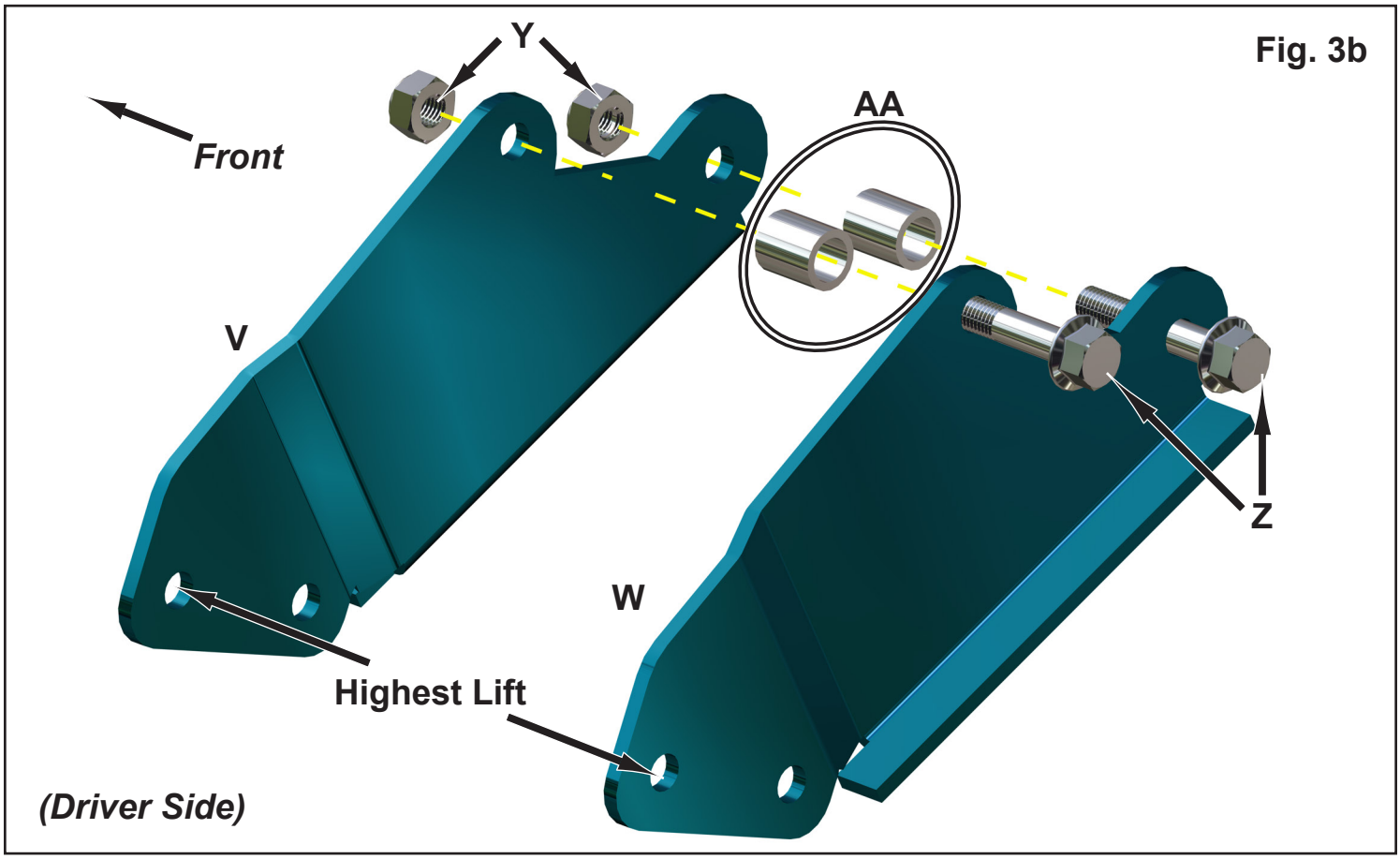

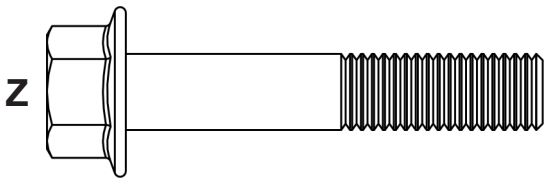

Z M10 x 55mm Lg. FHCS

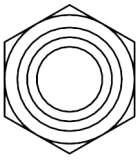

Y M10 Nylock Nut **AA** Ø18mm OD x 21mm Lg. Spacer

(instructions continue on following pages)

REAR PIVOT BLOCK SETTINGS

- Place new A-Arms onto a flat surface and verify dimension shown.
- *Negative 1° camber setting is achieved when Pivot Blocks are set to this dimension.*
- See last page for additional camber information.

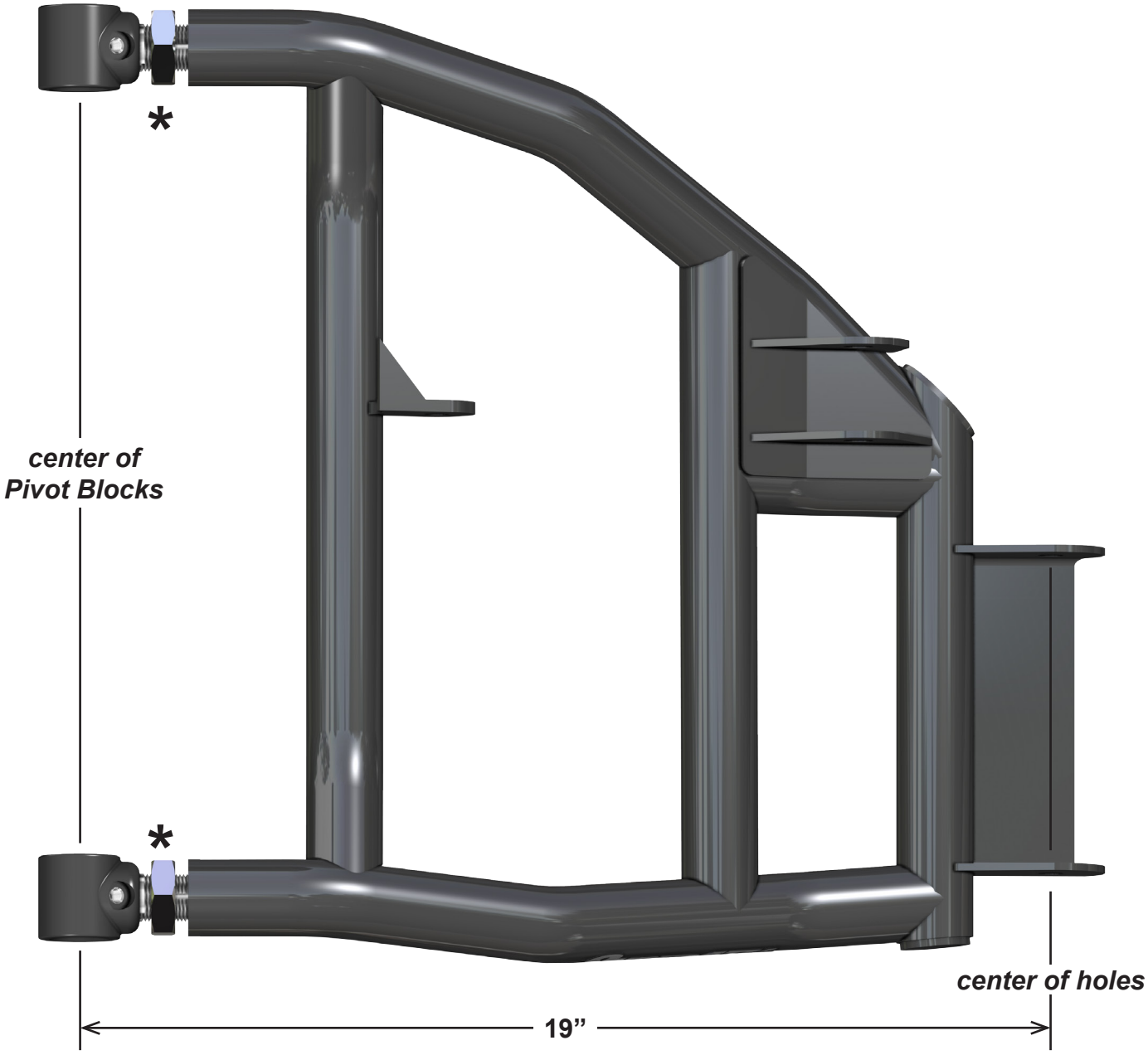

∗Leave Jam Nuts loose. Tighten after final adjustments have been made.

Rear A-Arms Mounting

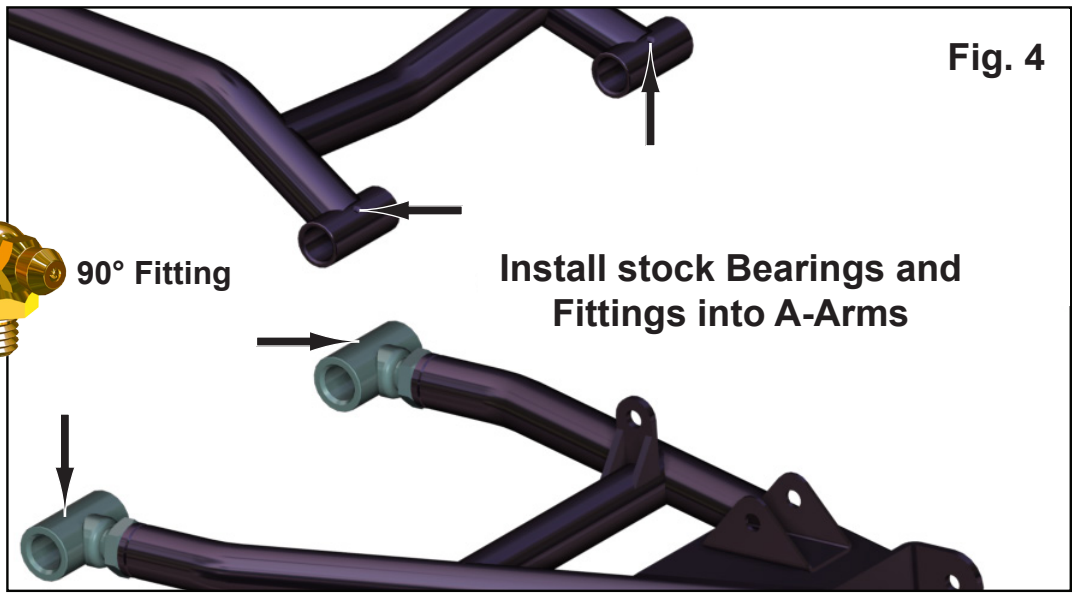

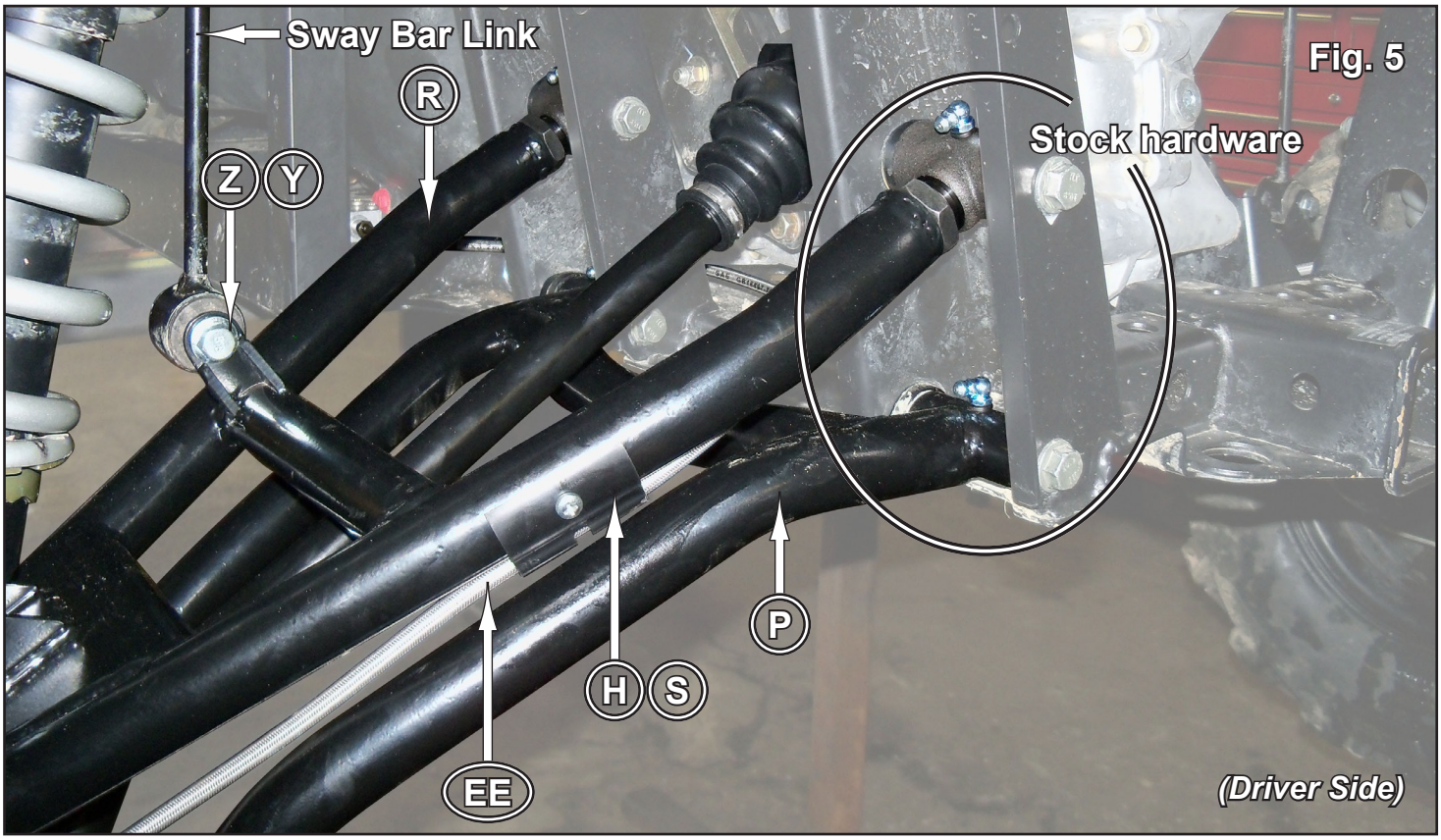

S 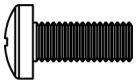 M5 x 13mm Lg. PHMS

Y 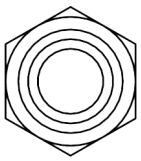 M10 Nylock Nut

Z 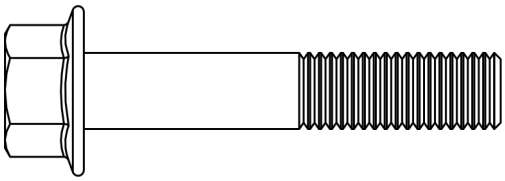 M10 x 55mm Lg. FHCS

CAMBER

- **Tires must have equal air pressure before making adjustments.**
- **Adjustments to be made after all suspension components have been completely assembled.**
- **Tires must not be in contact with ground when making adjustments.**
- **Perform adjustments in small increments.**





Adjusting Camber:

- Remove A-Arms from Frame and turn Pivot Blocks to adjust camber. Reinstall Arms.
- Lower machine and settle suspension components by rolling machine back and forth several feet at a time.
- Check settings and make small adjustments as needed.
- Each time an adjustment is made, machine must be rolled back and forth to settle suspension components.
- Once desired setting is achieved, tighten hardware completely. Loc-tite on Nuts is recommended.

A NEGATIVE CAMBER SETTING OF 1° to 2° IS RECOMMENDED.

LOWER:
Too much positive camber: adjust Pivot Blocks *OUT*.
Too much negative camber: adjust Pivot Blocks *IN*.
note: 2 full turns is 1°

UPPER A-ARMS:
Too much positive camber: adjust Pivot Blocks *IN*.
Too much negative camber: adjust Pivot Blocks *OUT*.
note: 2 full turns is 1°

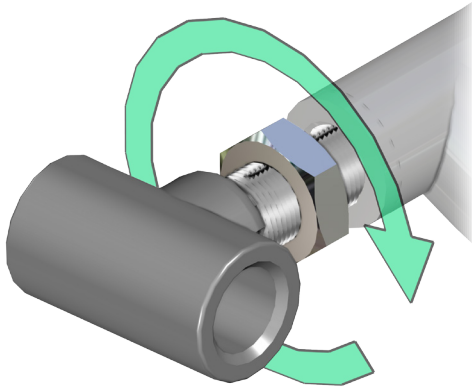

IN-Arm-Settings