2753 Michigan Road • Madison, Indiana 47250 • 855-743-3427

INSTALLATION INSTRUCTIONS

Gen 3 Portal Gear Hubs - 6”

Polaris General XP 1000

WHEN FILLING GEAR BOX USE ONLY 80W-90 GEAR OIL. USING GREASE WILL CAUSE FAILURE OF GEARS AND BEARINGS. USING GREASE WILL VOID THE WARRANTY.

Item	Description
A	Rotor x 4
B	Left Gear Box x 2
C	Right Gear Box x 2
D	Gasket x 4
E	Cap x 4
F	Recessed Nut x 4

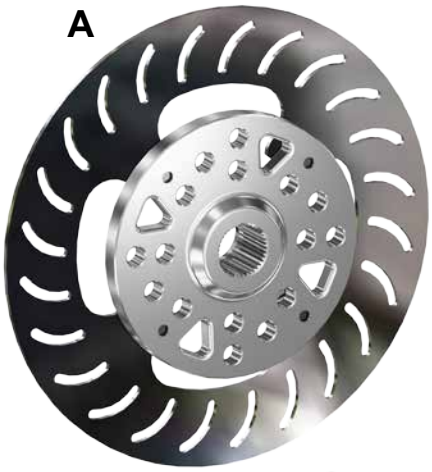





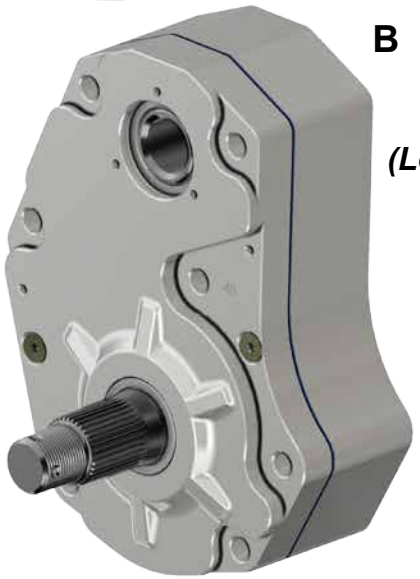









(Kit Contents continue on following pages)

Need help with your installation?

sales@superatv.com

www.superatv.com

1-855-743-3427

8:00am - 8:00pm EST M-Th
8:00am - 7:00pm EST Friday
9:00am - 2:00pm EST Saturday

Read instructions and view illustrations before beginning.

Thank You For Choosing

© 2020 SuperATV.com® All Rights Reserved.

(Kit Contents continued)



Item	Description
G	Front Caliper Mounting Bracket x 2
H	Left Spindle
J	Right Spindle
K	Left Bearing Carrier
L	Right Bearing Carrier
M	Left Steering Arm
N	Right Steering Arm
P	Rear Caliper Mounting Bracket x 2

Brake Lines:

Length (Approx)	Location
56”	Right Front
65”	Right Rear
42”	Left Front
50”	Left Rear

Front Brake Lines have same style fittings at each end.

Machines with SuperATV Heavy Duty Tie Rod Ends must use provided hardware shown when securing to Steering Arms.

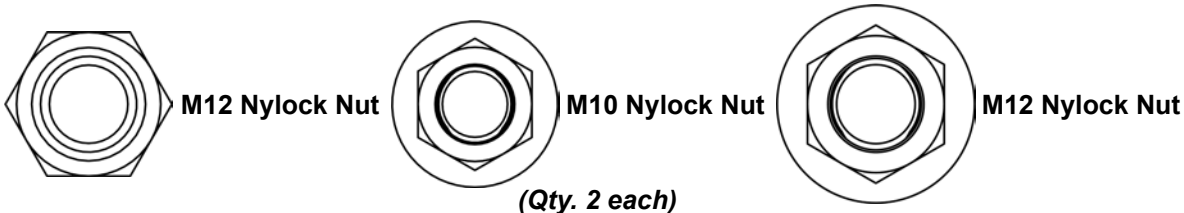

M12 Nylock Nut **M10 Nylock Nut** **M12 Nylock Nut**

(Qty. 2 each)

Read ALL instructions prior to operating Portal Gear Hubs. Injury to personnel, portal gear hub, and/or machine failure may be caused by improper installation, maintenance or operation.
• It is dangerous to get under a jacked-up vehicle. The vehicle could slip off the jack and fall on you. You could be crushed. Never place any part of your body under a vehicle that is on a jack. Never start or run the engine while the vehicle is on a jack. If you need to get under a raised vehicle, take it to a service center where it can be raised on a lift.
• Hot oil can cause severe burns. Use extreme care when removing lubrication plugs and when working close to a unit that has been in operation.
• Check lube level between scheduled lube changes to insure that proper lube level is maintained. Inspect the tightness of mounting bolts, excessive heating, or any unusual noise or vibration.
• Serious personal injury may occur as a result of improperly performed maintenance, adjustments or repairs.
• Always be extremely careful when working on the portal gear hub. Always follow commonly accepted safety practices and general common sense. Never risk personal injury.
• Do not operate the portal gear hub without proper lube and correct amount.

For safe operation and to maintain the unit warranty, when changing a provided fastener for any reason, it becomes the responsibility of the person making the change to properly account for fastener grade, thread engagement, load, tightening torque and the means of torque retention.
• Mounting bolts should be periodically checked to ensure that the unit is firmly anchored for proper operation.
• These instructions are not intended to cover all details or variations in equipment, nor provide for every possible contingency to be met in connection with selection, installation, operation, and maintenance.
Should further information be desired or should particular problems arise which are not covered sufficiently for the Buyer's purpose, the matter should be referred to SuperATV®.

In the event of the resale of any of the goods, in whatever form, Resellers/Buyers will include the following language in a conspicuous place and in a conspicuous manner in a written agreement covering such sale:
The manufacturer makes no warranties or representations, express or implied, by operation of law or otherwise, as to the merchantability or fitness for a particular purpose of the goods sold hereunder. Buyer acknowledges that it alone has determined that the goods purchased hereunder will suitably meet the requirements of their intended use. In no event will the manufacturer be liable for consequential, incidental or other damages. Even if the repair or replacement remedy shall be deemed to have failed of its essential purpose under Section 2-719 of the Uniform Commercial Code, the manufacturer shall have no liability to Buyer for consequential damages.
Resellers/Buyers agree to also include this entire document including the danger, warnings and cautions above in a conspicuous place and in a conspicuous manner in writing to instruct users on the safe usage of the product.

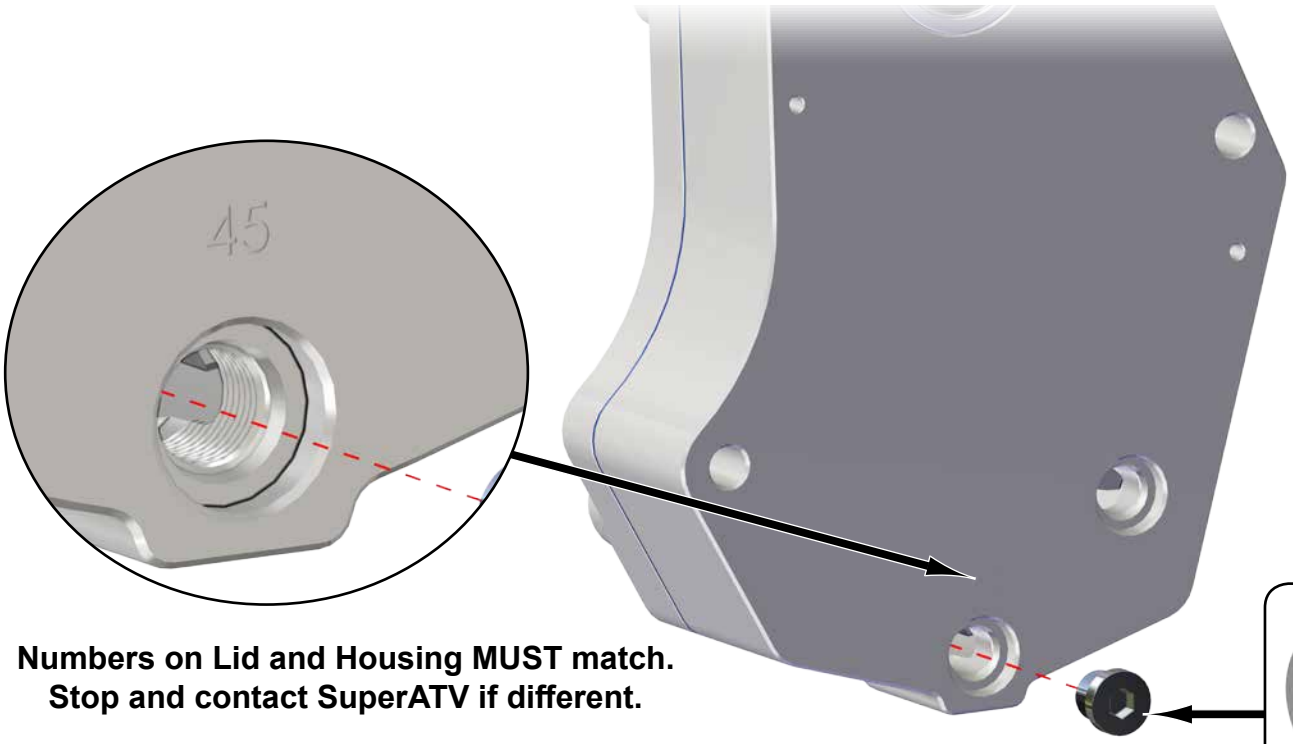

Numbers on Lid and Housing MUST match.
Stop and contact SuperATV if different.

install into each Gear Box
Torque to 10 ft/lbs

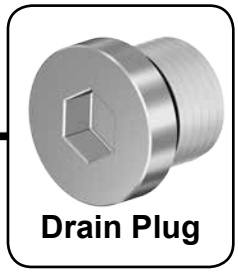

Drain Plug

DO NOT USE IMPACT WRENCH WHEN INSTALLING ANY HARDWARE INTO HOUSING

if not present, install hardware shown

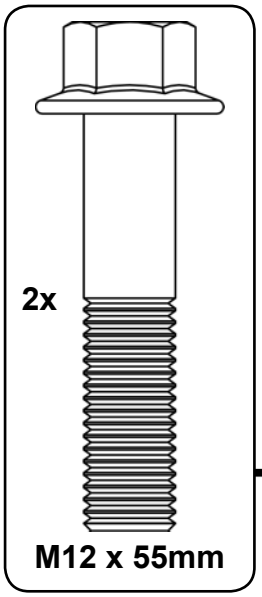

2x

M12 x 55mm

Torque to 60 ft/lbs MAX

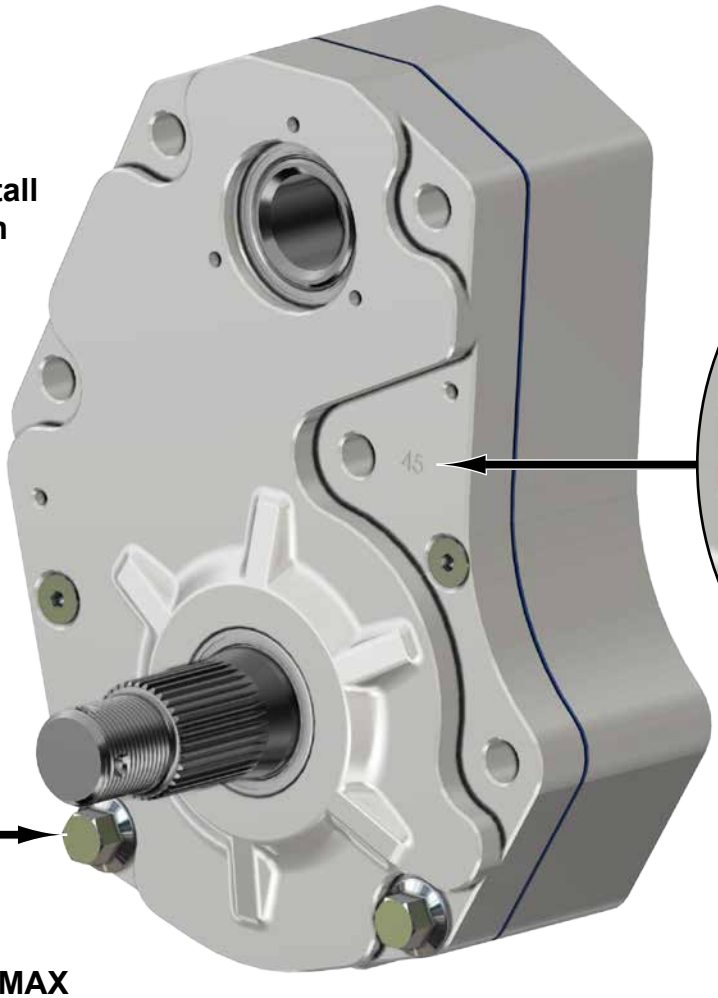



Front Components Removal: *Keep all components removed from machine.*

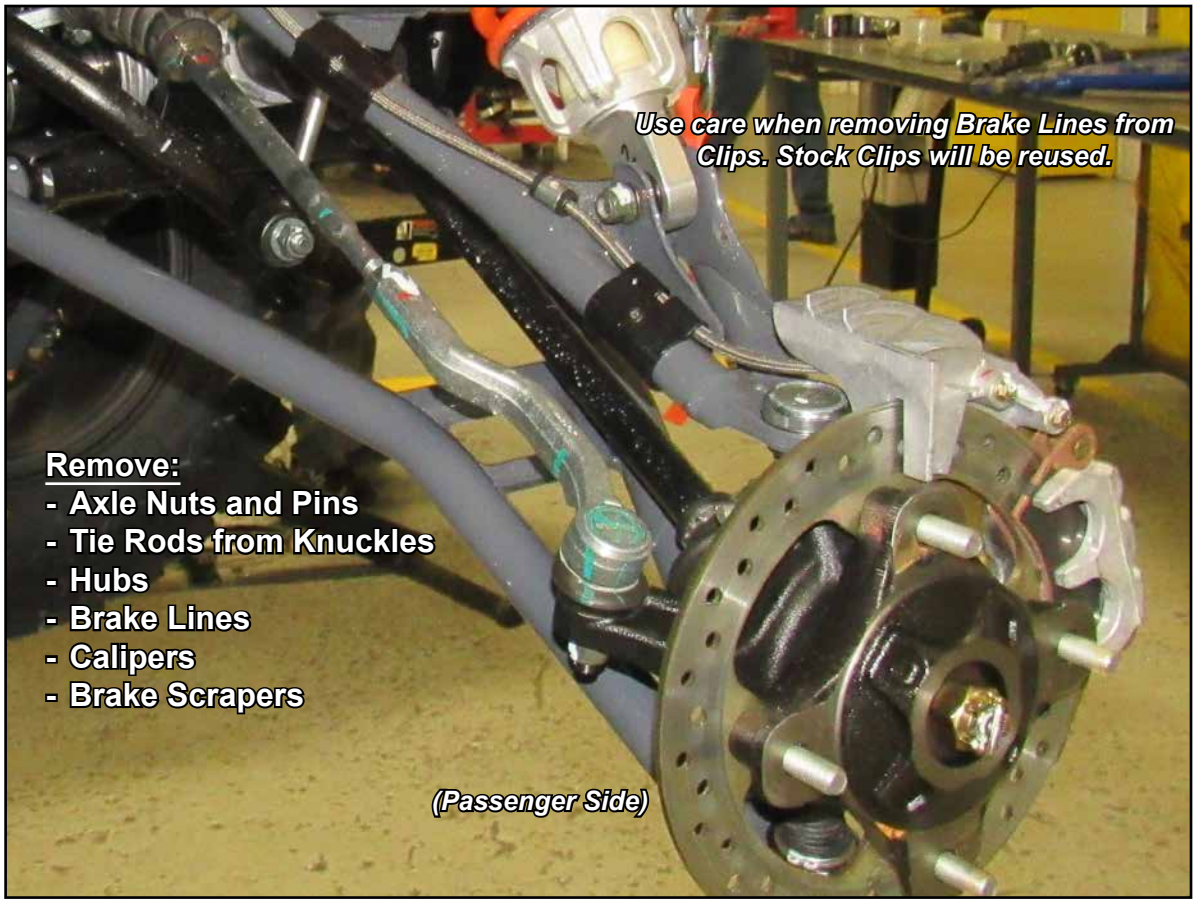

Rear Components Removal: *Keep all components removed from machine.*

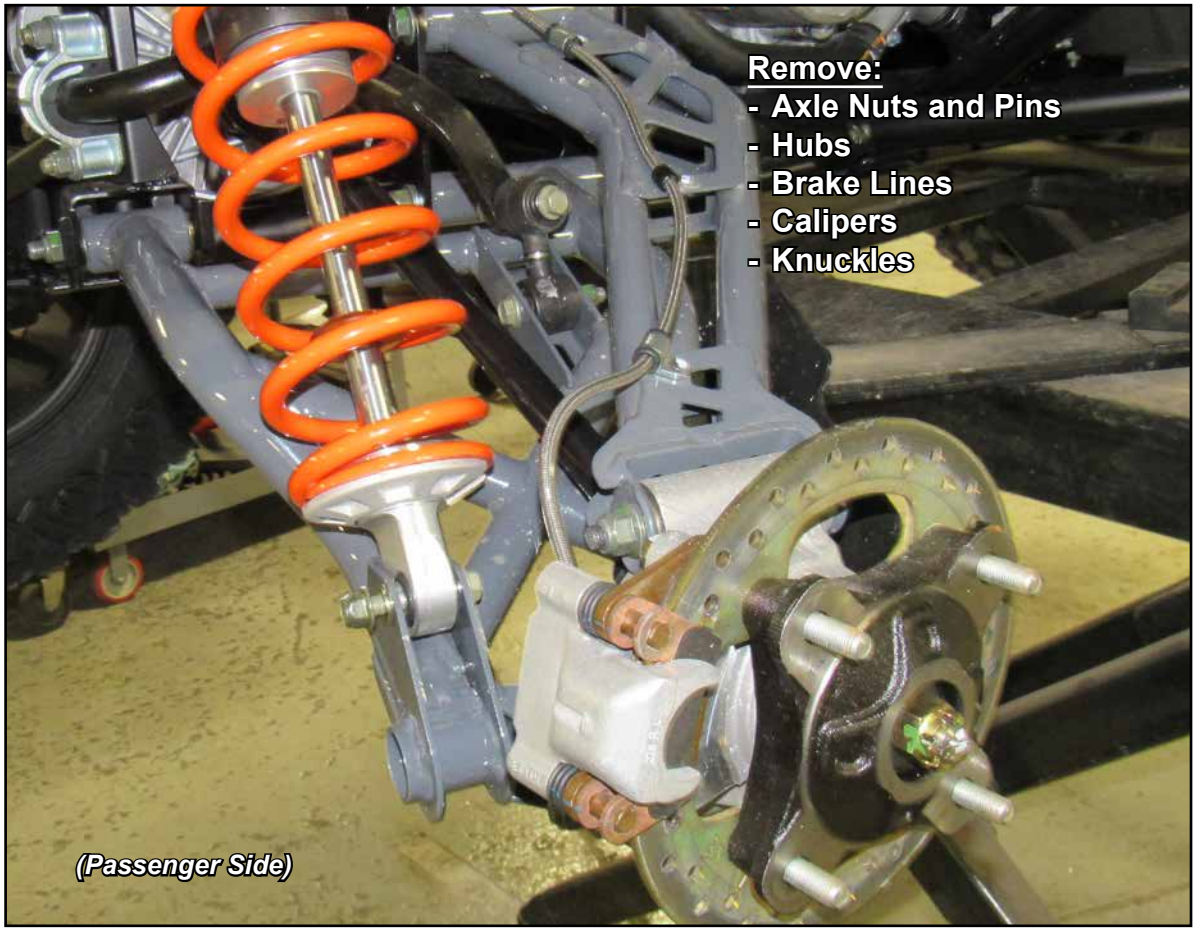

Install provided Studs into Rotors (A):
- See “Wheel Hub Bolt Patterns”.
- Note machines bolt pattern and lug size.
- Set Rotors (A) aside when complete.



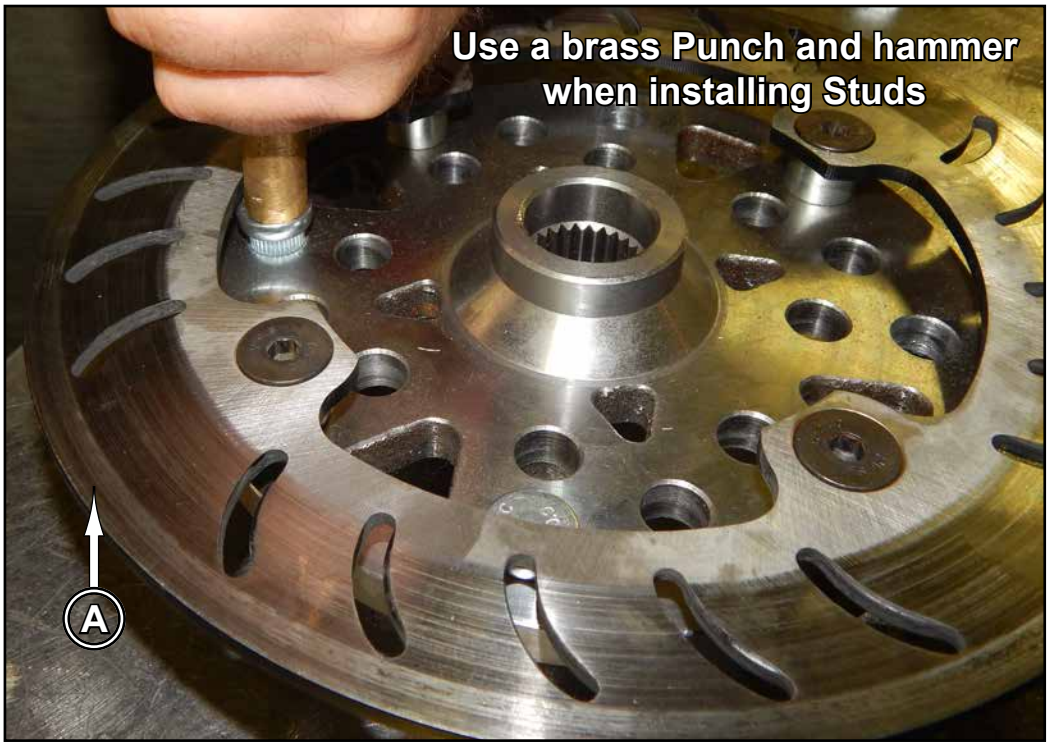



Wheel Hub Bolt Patterns

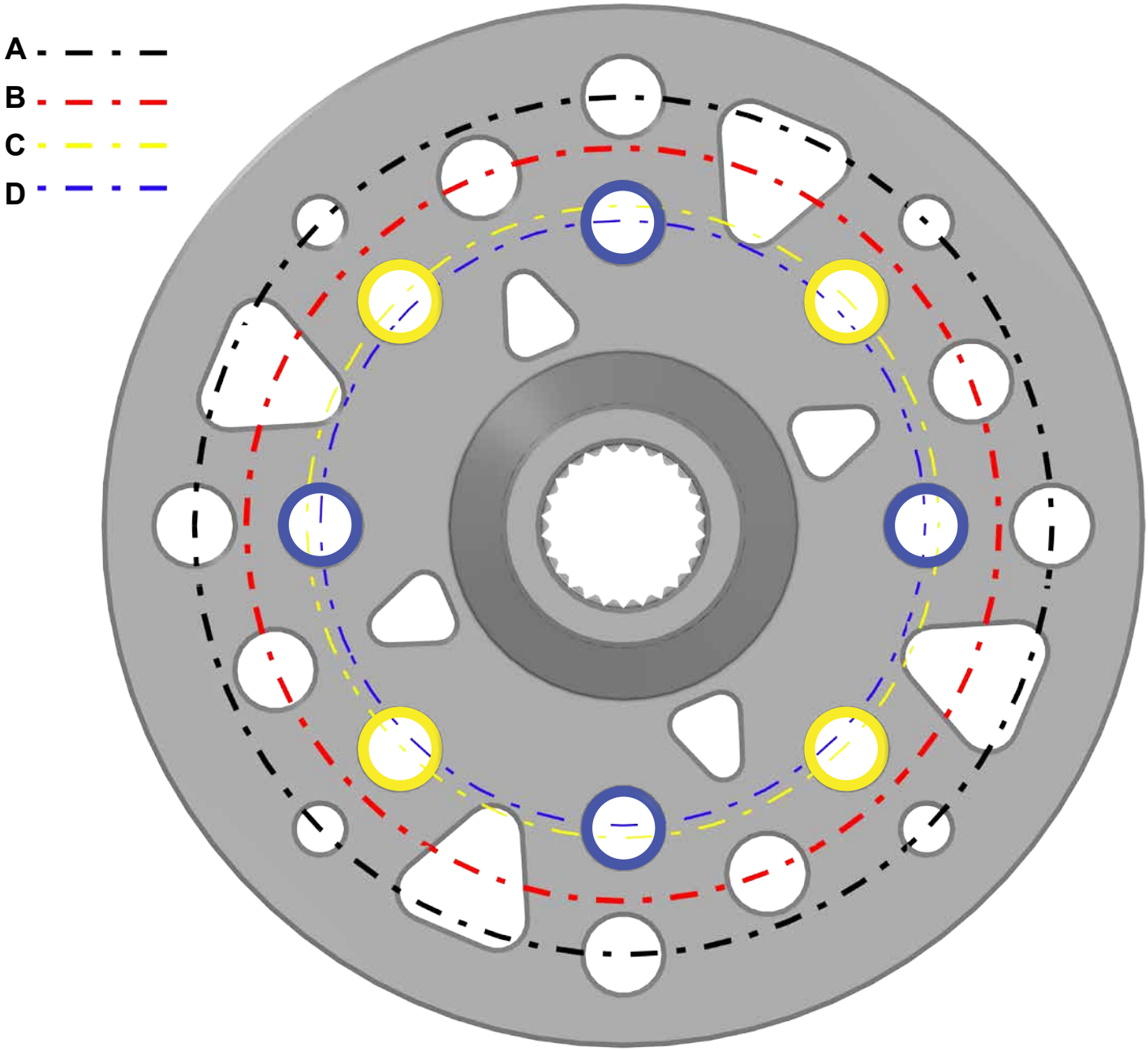

Pattern	Machine	Diameter
A	Polaris	156mm
B	Can-Am/Teryx4	137mm
C	Arctic Cat	115mm
D	Honda/Yamaha	110mm

Front: *do not tighten hardware completely unless noted.*

- Secure Steering Arm (M) to Left Spindle (H) with hardware shown.

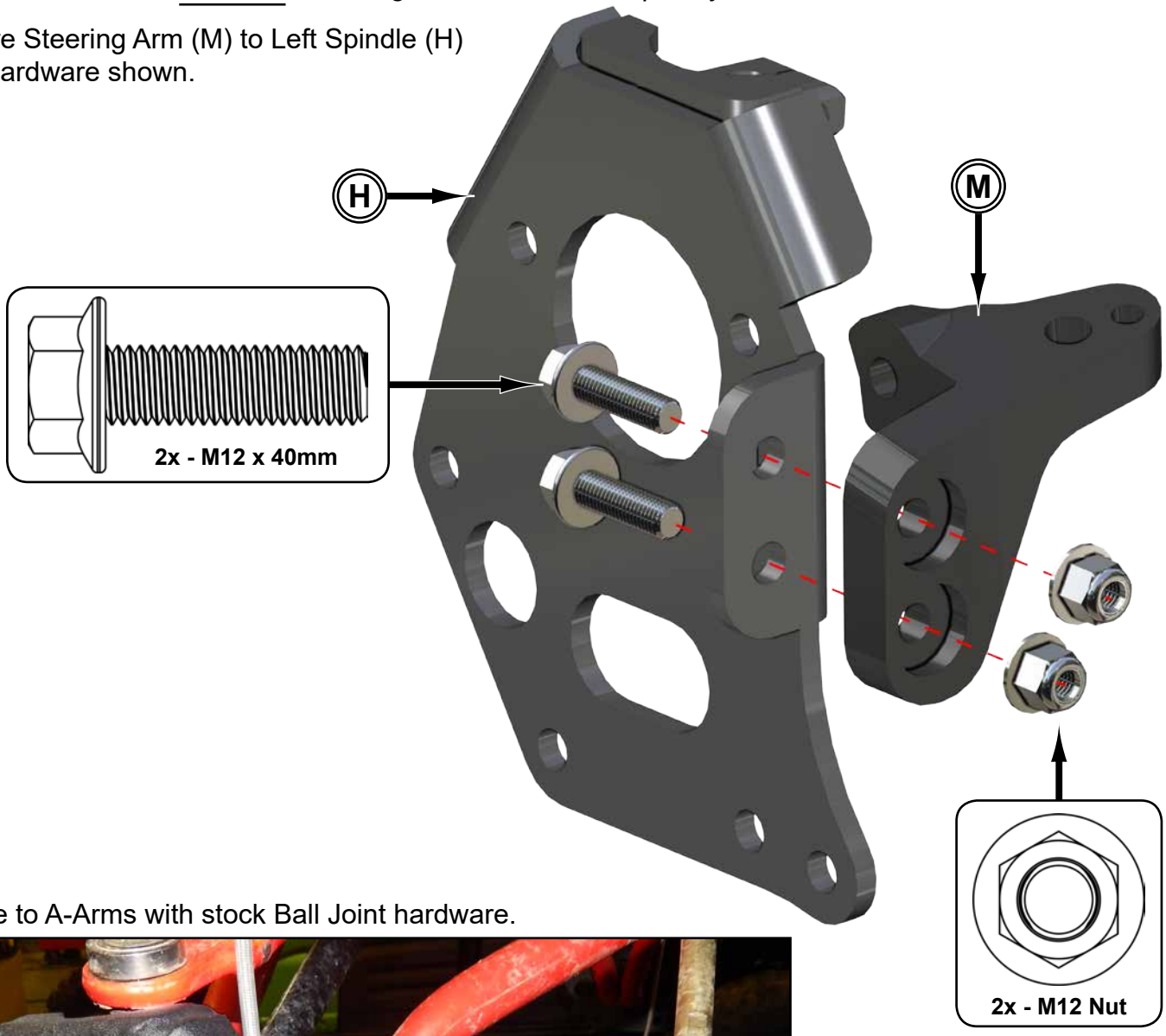

- Secure to A-Arms with stock Ball Joint hardware.

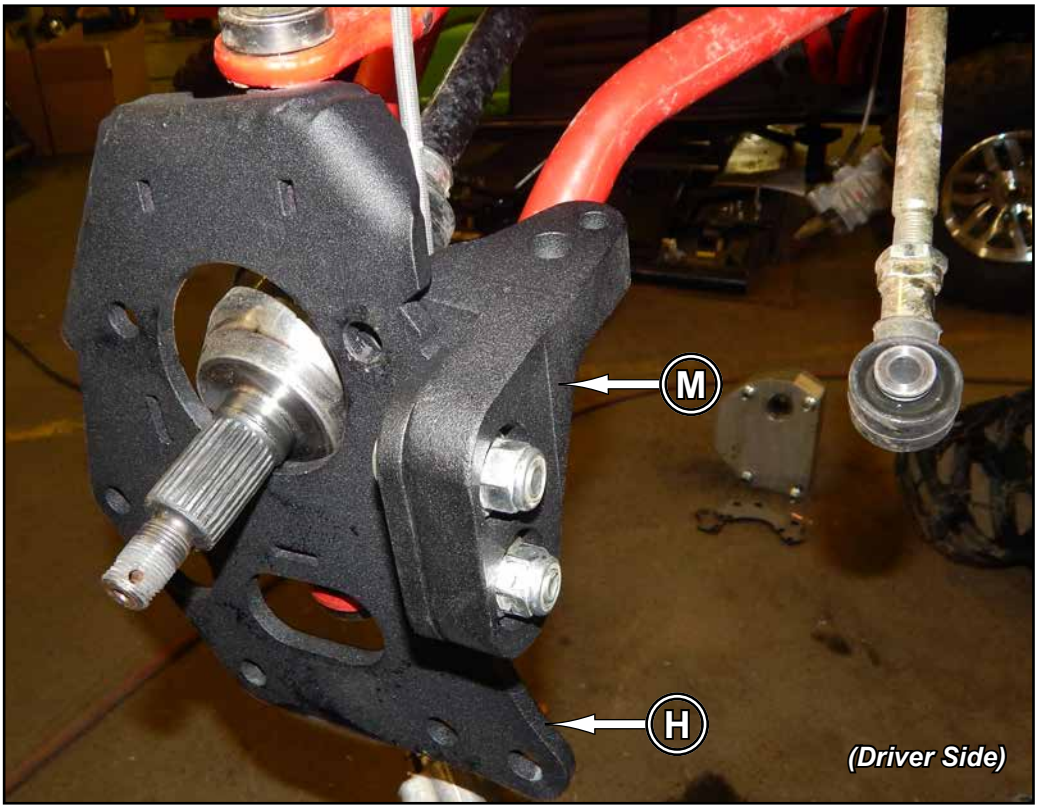

Front continued:

- Secure Left Gear Box (B) and Front Caliper Mounting Bracket (G) to Left Spindle (H) with hardware shown.

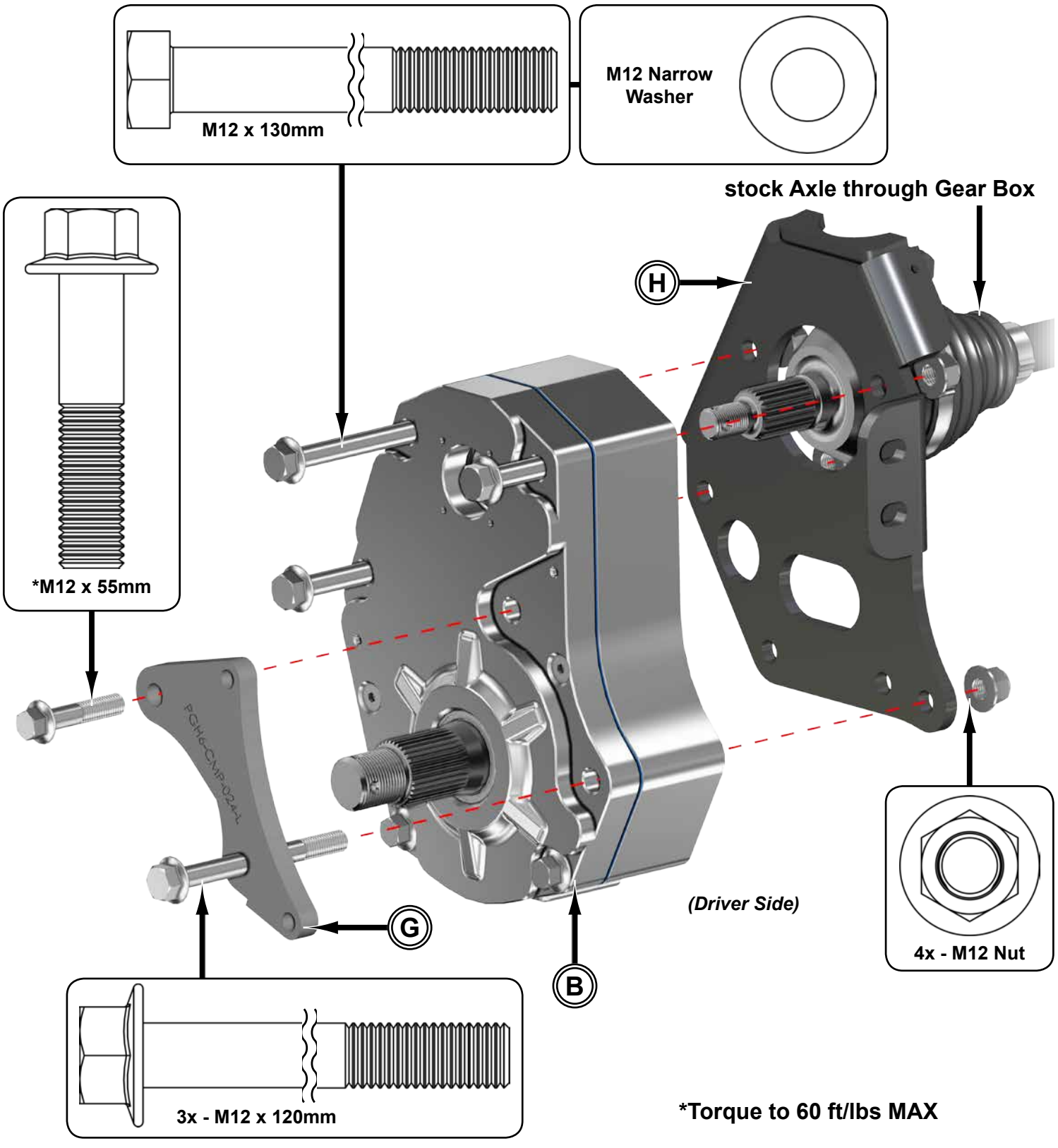

Tighten all hardware completely.

Front continued:

- Secure stock Axle with Front Recessed Nut (F); use thread locker.
- Secure Gasket (D) and Cap (E) to Gear Box (B) with hardware shown.
- Secure Rotor (A) to Gear Box Axle Shaft with hardware shown.

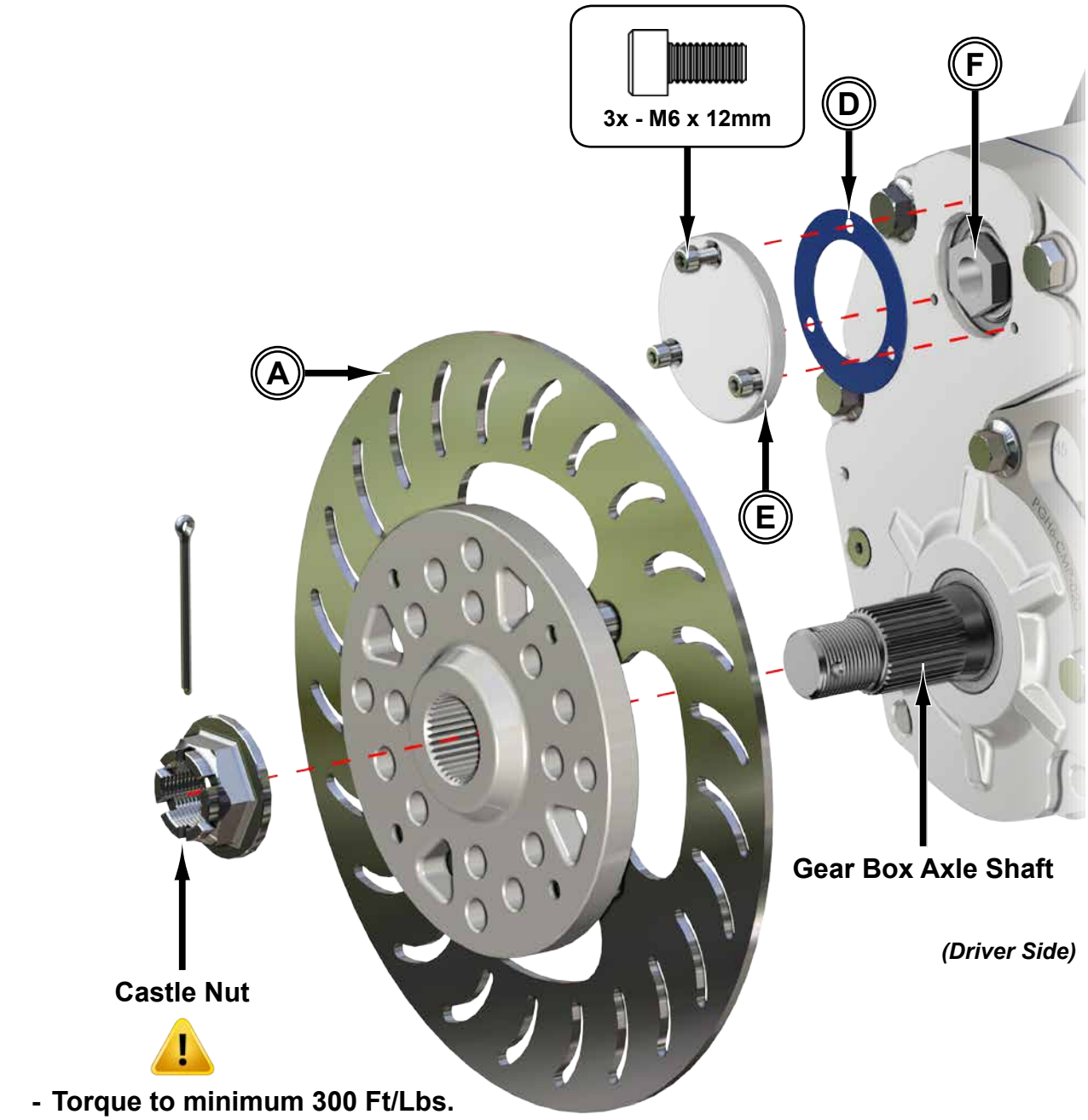

- **Torque to minimum 300 Ft/Lbs.**
- **Continue tightening until Cotter Pin can be installed.**

Tighten all hardware completely and repeat steps for opposite side.

Front continued:

- Reinstall stock Calipers to Front Caliper Mounting Bracket (G) with stock hardware.
- ***Front Brake Calipers must be switched: passenger side to driver side. Bleeders must face up.***

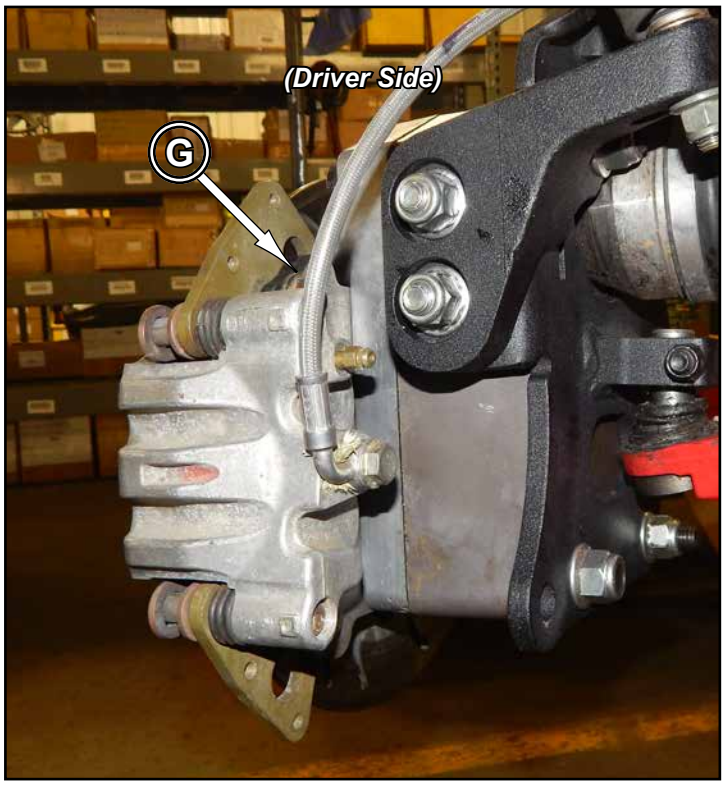

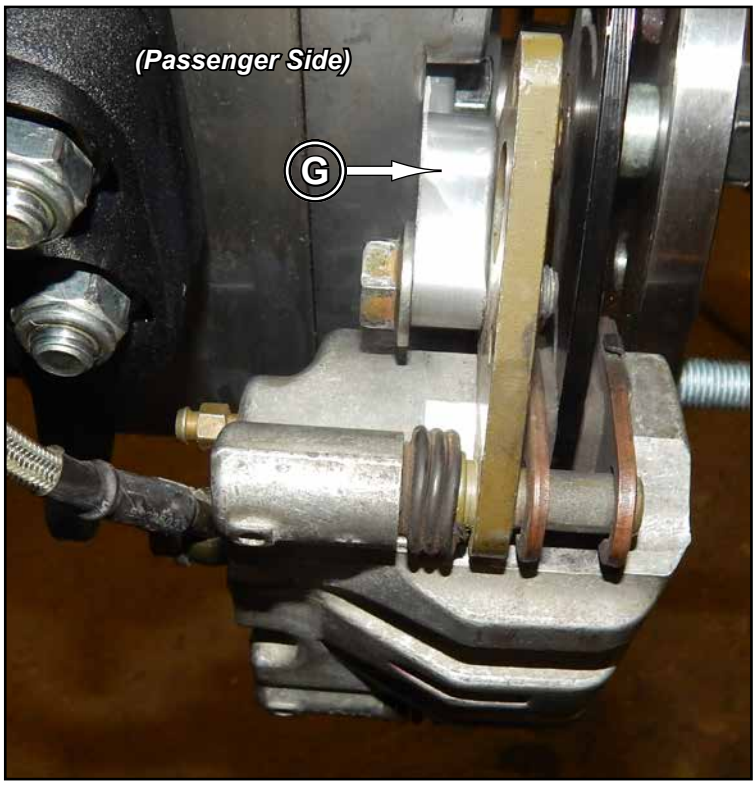

- Secure Tie Rod Ends to inner most hole in Steering Arms (M)(N) with stock hardware.

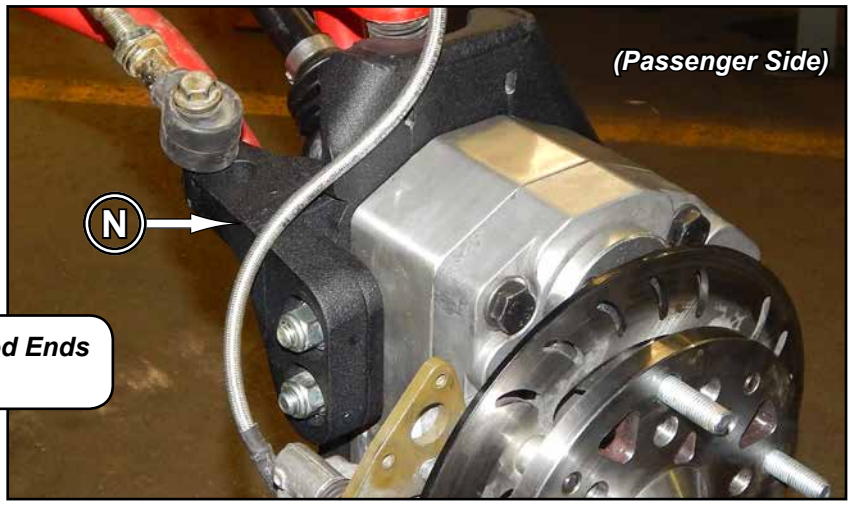



If machine has SuperATV Heavy Duty Tie Rod Ends see page 2 for correct hardware.

Front continued:

- Install provided Front Brake Lines.
- Ensure that no binding occurs after Brake Lines have been installed and secured.

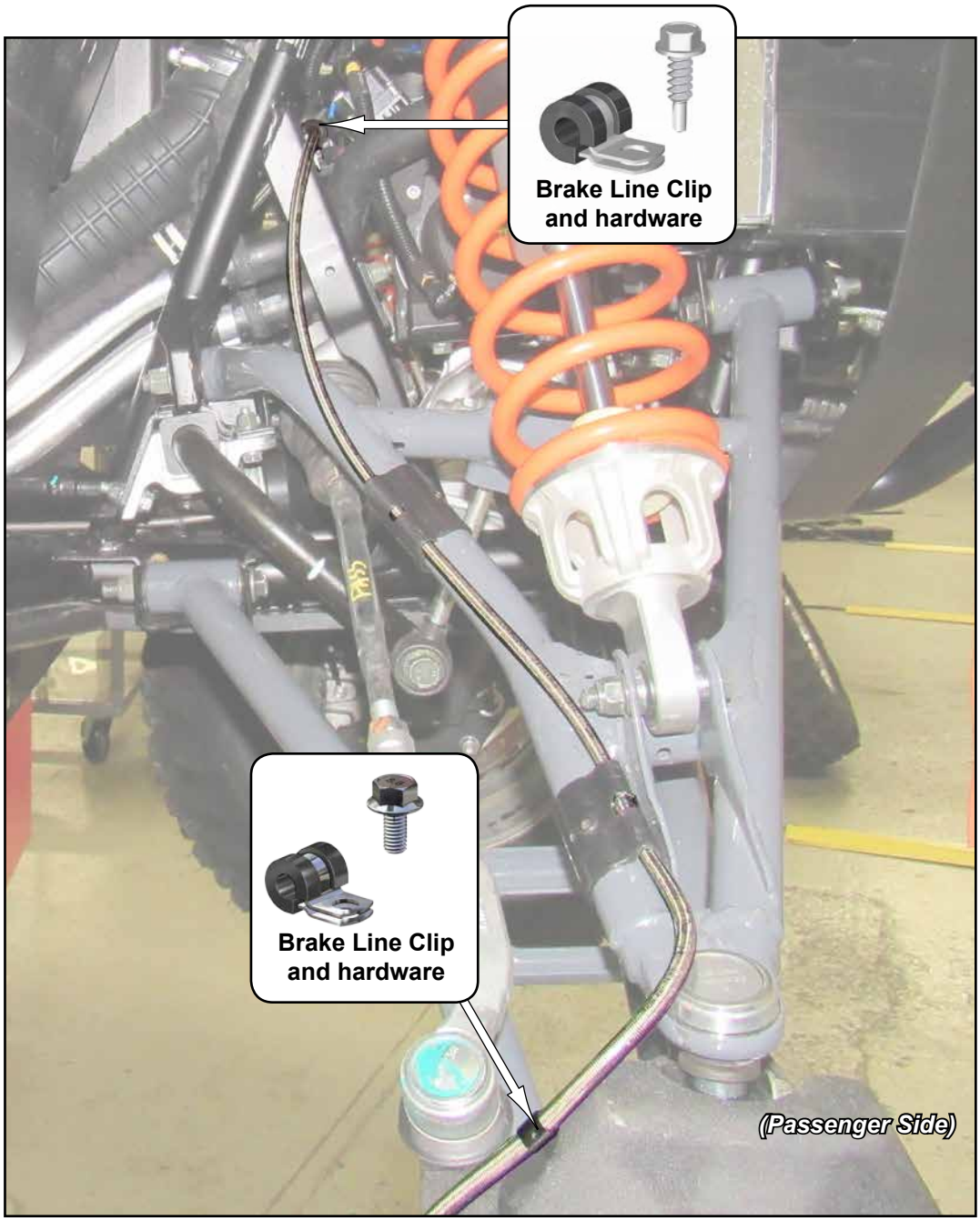

Rear: *do not tighten hardware completely unless noted.*

- Install stock components and provided Bushings into Bearing Carriers.

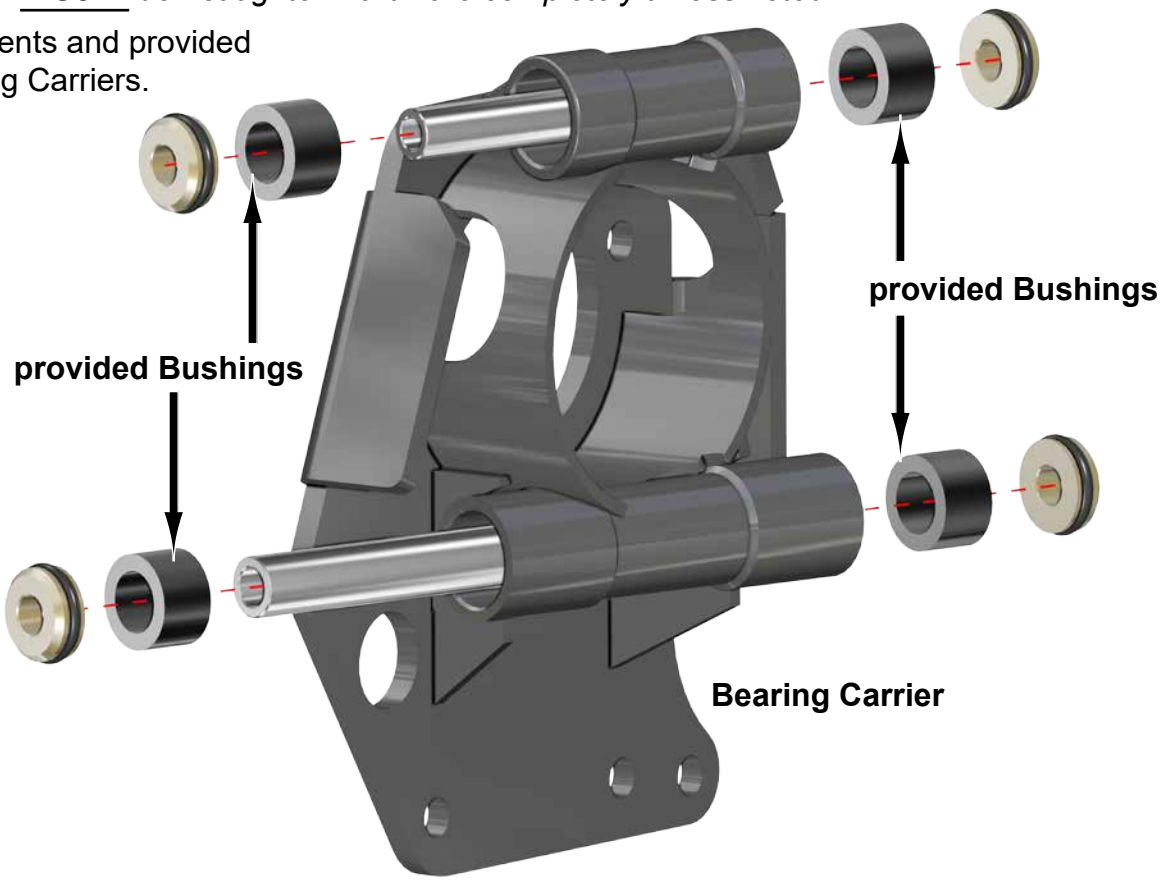

- Secure Right Bearing Carrier (L) to Rear A-Arms with stock hardware. *Note: do not reinstall stock Washers.*



repeat for opposite side

Rear continued:

- Secure Left Gear Box (B) and Rear Caliper Mounting Bracket (P) to Left Bearing Carrier (K) with hardware shown.

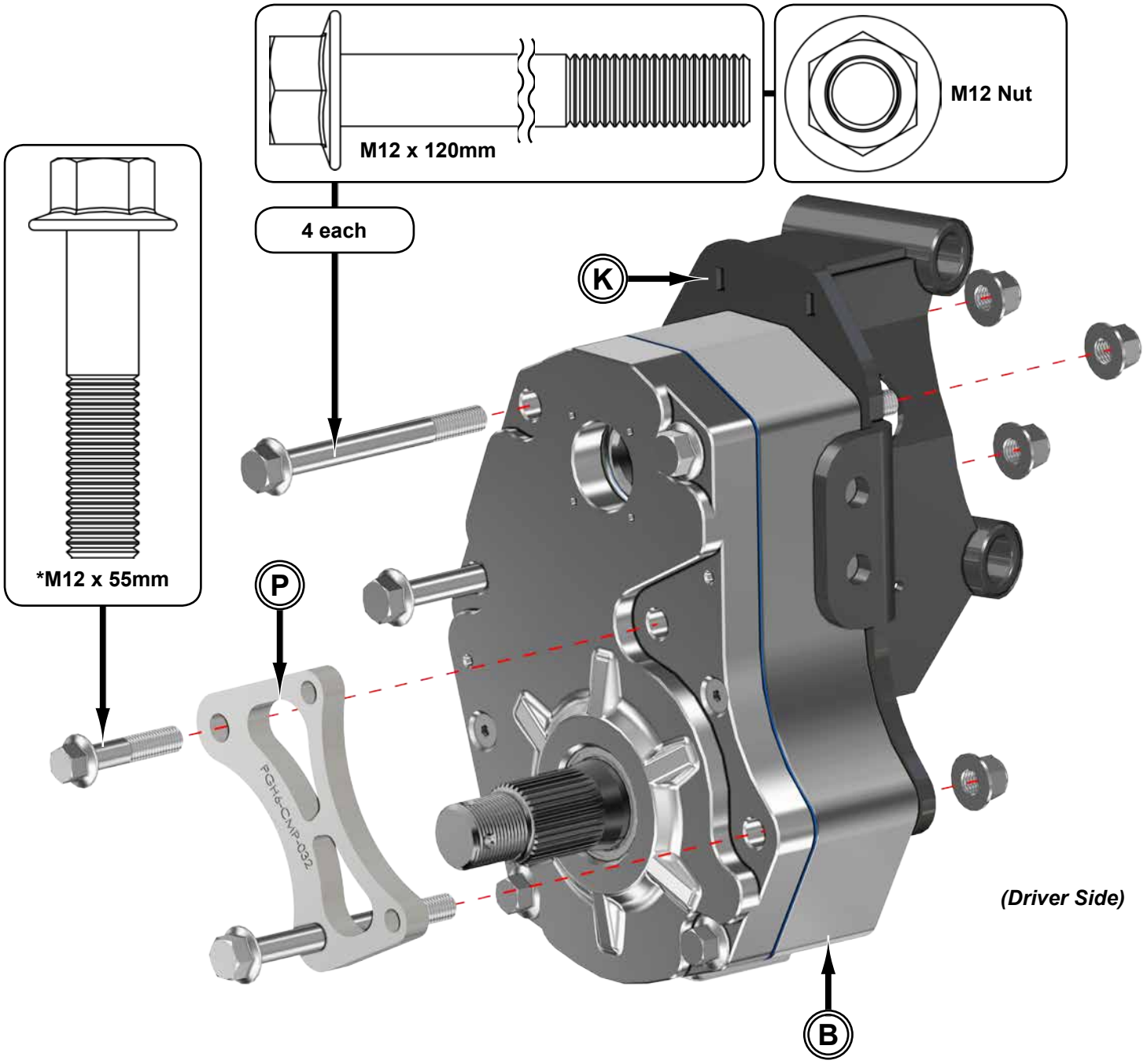

***Torque to 60 ft/lbs MAX**

Tighten all hardware completely.

Rear continued:

- Secure stock Axle with Front Recessed Nut (F); use thread locker.
- Secure Gasket (D) and Cap (E) to Gear Box (B) with hardware shown.
- Secure Rotor (A) to Gear Box Axle Shaft with hardware shown.

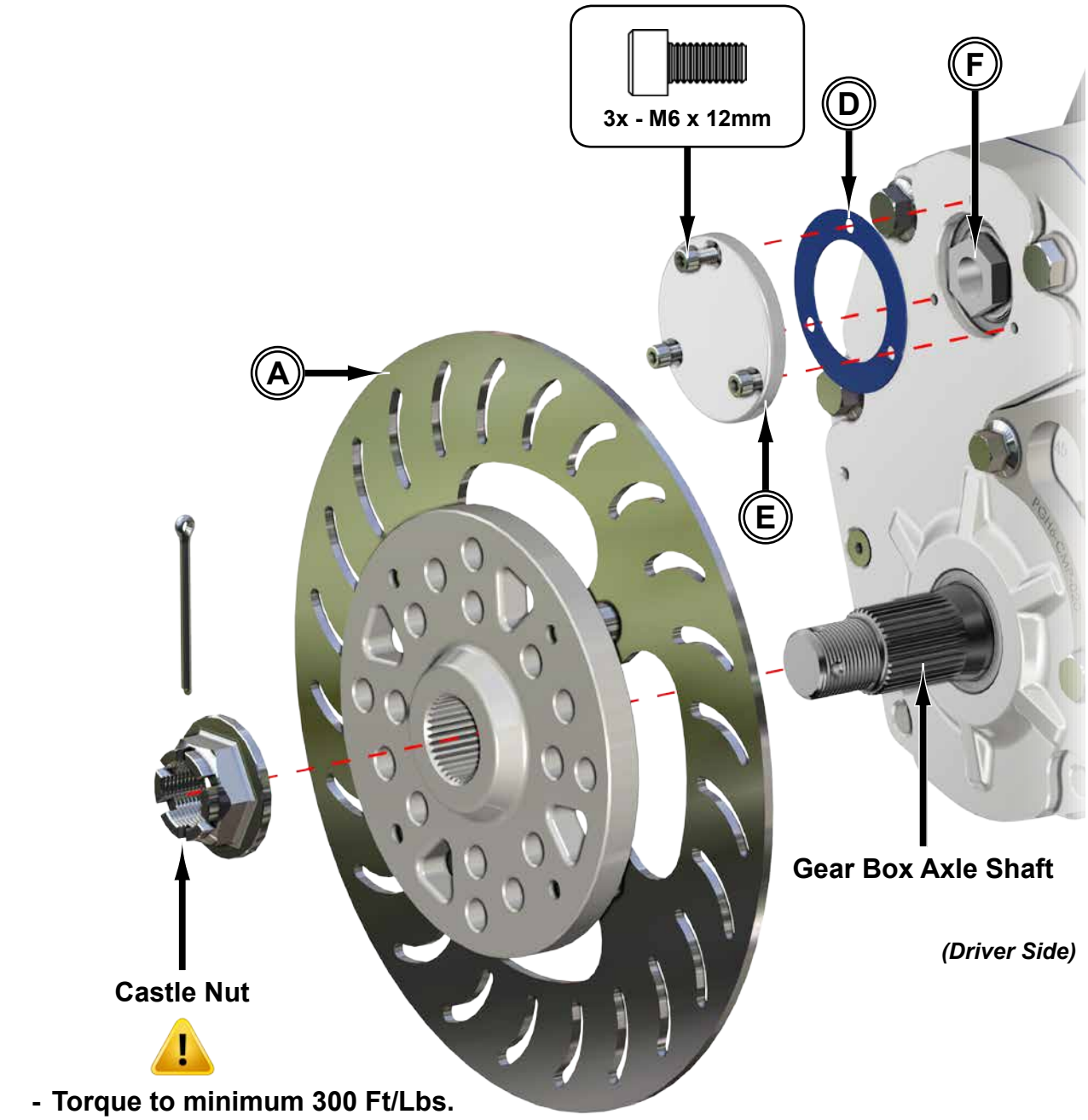

- **Torque to minimum 300 Ft/Lbs.**
- **Continue tightening until Cotter Pin can be installed.**

Tighten all hardware completely and repeat steps for opposite side.

Rear continued:

- Reinstall stock Caliper to Rear Caliper Mounting Brackets(P) with stock hardware.
- Install provided Rear Brake Line.
- Ensure that no binding occurs after Brake Line has been installed and secured.

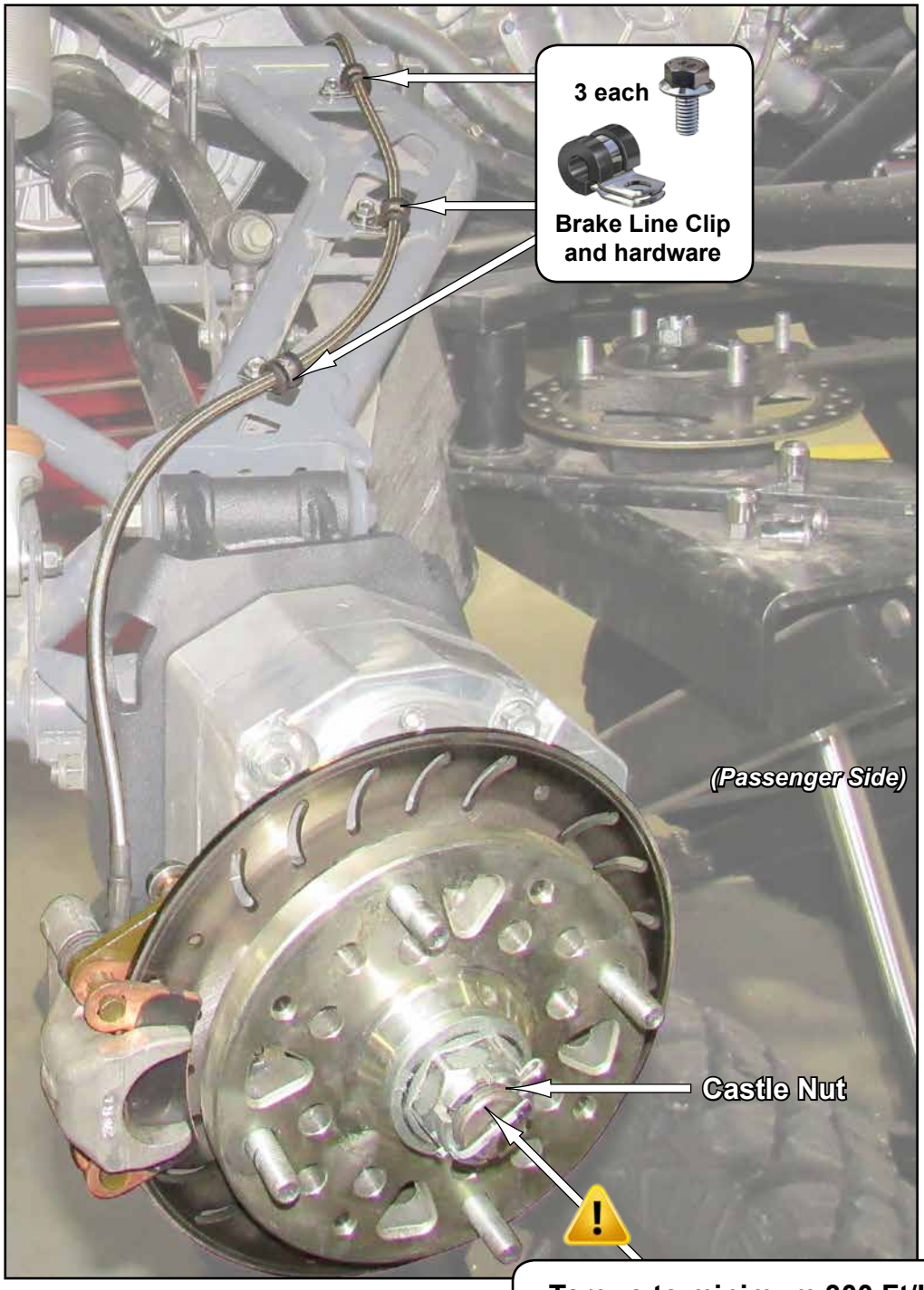

Tighten all hardware completely and repeat steps for opposite side.

Rear continued:

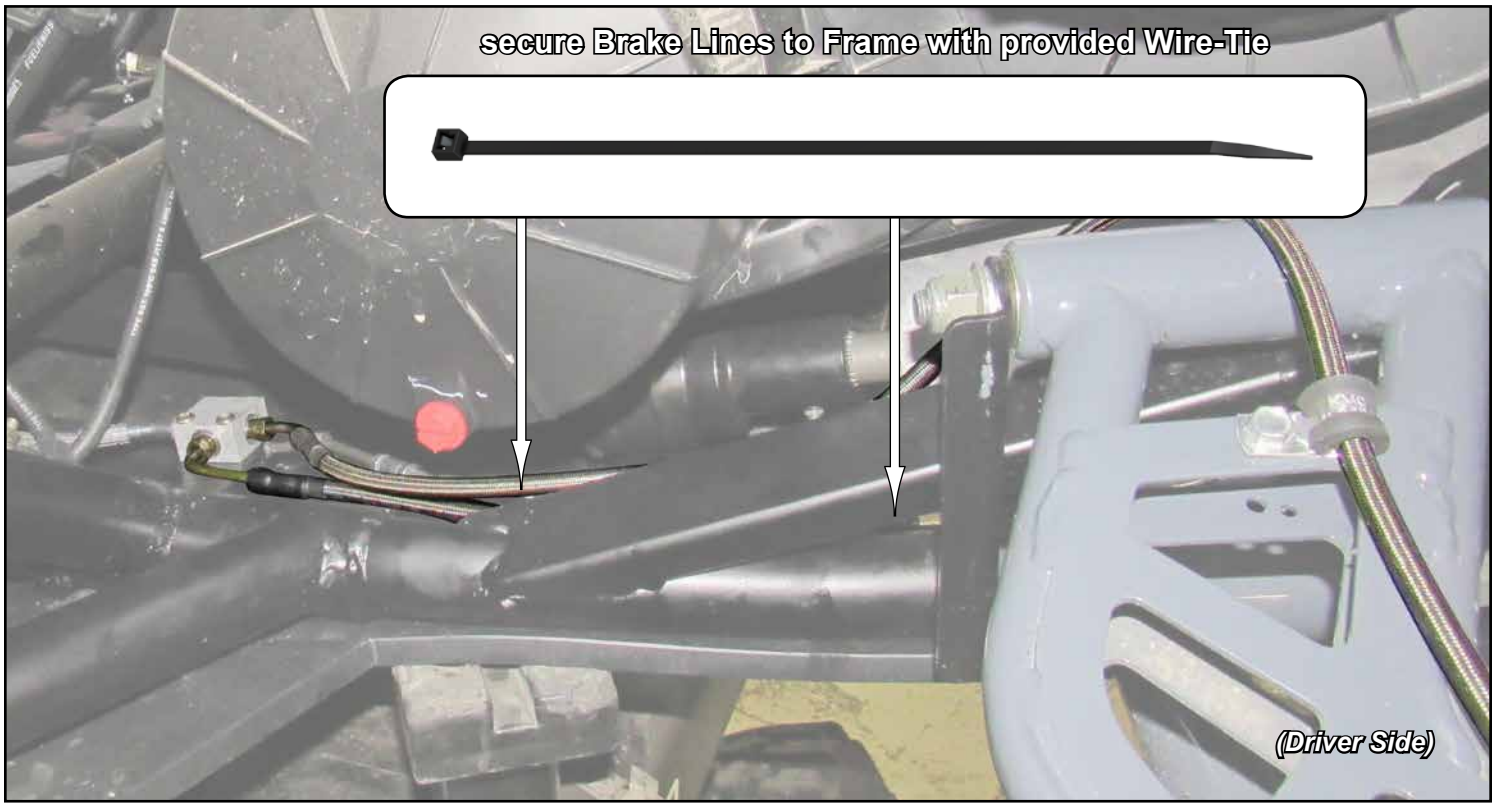

- Attach a hose to a funnel and fill each Gear Box (B-C) with 80W-90 Gear Oil.
- Fill up to fill hole.
- Install Drain Plug.

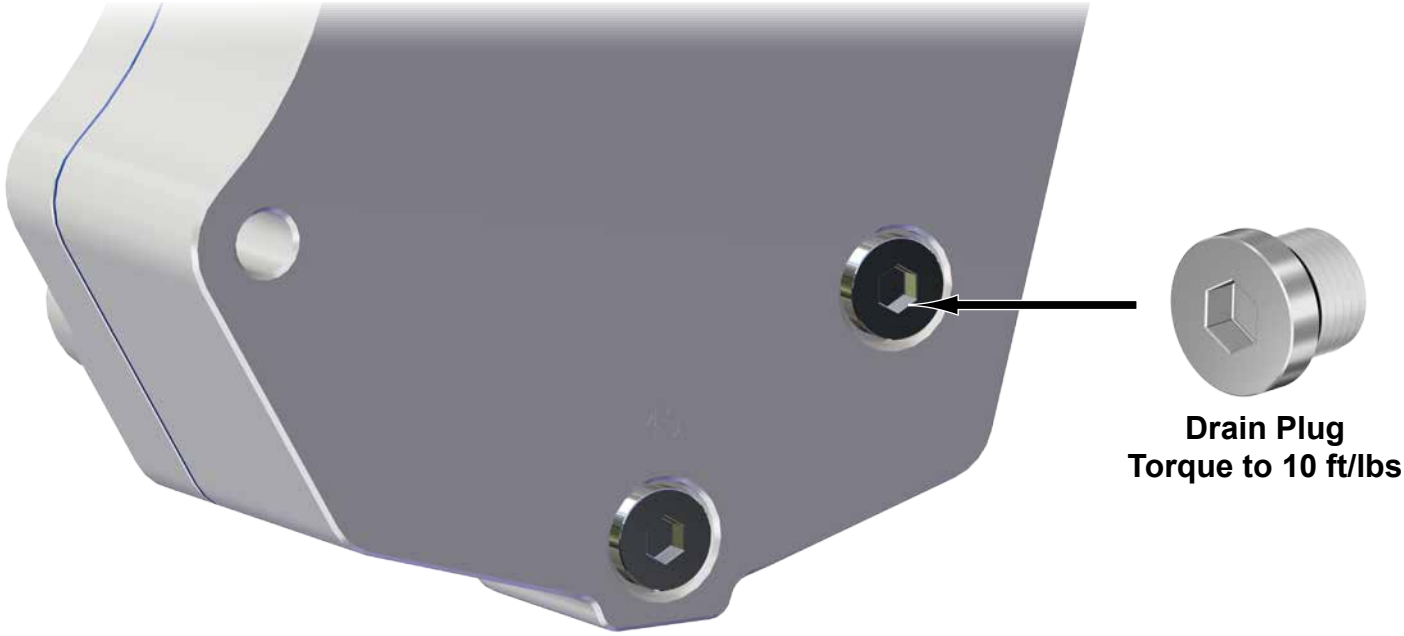

Liability Statement

SuperATV's® products are designed to best fit user's ATV/UTV under stock conditions. Adding, modifying, or fabricating any factory or aftermarket parts will void any warranty provided by SuperATV® and is not recommended. SuperATV's® products could interfere with other aftermarket accessories. If user has aftermarket products on machine, contact SuperATV® to verify that they will work together.

Although SuperATV® has thousands of satisfied customers, user should be aware that installing lift kits, long travel, or suspension kits, tires, etc. will change the ride of machine and may increase maintenance and part wear. Operating any off-road machine while, or after, consuming alcohol and/or drugs increases risk of bodily harm or death. No warranty or representation is made as to this product's ability to protect user from severe injury or death. SuperATV® urges operators and occupants to wear a helmet and appropriate riding gear at all times.

By purchasing and installing SuperATV® products, user agrees that should damages occur, SuperATV® will not be held responsible for loss of time, use, labor fees, replacement parts, or freight charges. SuperATV®, nor any 3rd party, will not be held responsible for any direct, indirect, incidental, special, or consequential damages that result from any product purchased from SuperATV®. The total liability of seller to user for all damages, losses, and causes of action, if any, shall not exceed the total purchase price paid for the product that gave rise to the claim.

SuperATV® will warranty only parts provided by SuperATV®. Any damage or problems with OEM housings, bearings, seals, or other manufacturers' products will not be covered by SuperATV®. SuperATV® parts and products are not warrantied if item was not installed properly, misused, or modified.

Installing, adding, modifying, or fabricating any factory or aftermarket product to your ATV/UTV may violate certain local, state, and federal laws. Be advised that laws vary depending on town, city, county, state, etc. Use of certain products on public streets, roads, or highways may be in violation law. The Buyer is solely and exclusively legally and personally responsible for any violation of the law by the installation or use of the product. You must abide by all local, state, and federal laws, including but not limited to vehicle safety, traffic laws, and ordinances. It is your responsibility to know the laws and how they apply to you.

The Buyer is responsible to fully understand the capability and limitations of his/her vehicle according to manufacturer specifications, warnings and instructions and agrees to hold SuperATV® harmless from any damage resulting from failure to adhere to such specifications, warnings and/ or instructions. The Buyer is also responsible to obey all applicable federal, state, and local laws and ordinances when operating his/her vehicle while using this product, and the Buyer agrees to hold SuperATV® harmless from any violation thereof.