2753 Michigan Road • Madison, Indiana 47250 • 855-743-3427

INSTALLATION INSTRUCTIONS

Portal Gear Hubs - 8”, 60%

Polaris RZR XP® 4 Turbo S and Turbo S

WHEN FILLING GEAR BOX USE ONLY SUPERATV PORTAL BLOOD. USING GREASE WILL CAUSE FAILURE OF GEARS AND BEARINGS. USING GREASE WILL VOID THE WARRANTY.

- Do not discard packaging until product has been successfully installed.
- PGH8-1-75-602 installation shown.

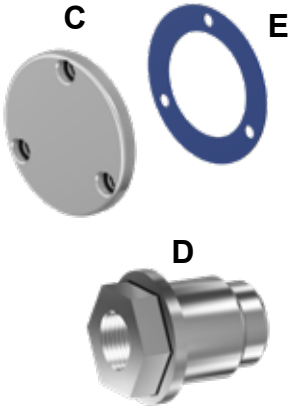

Item	Description
A	Rotor x 4
B	Gear Box x 4
C	Cap x 4
D	Recessed Nut x 4
E	Gasket x 4

Location	Length (Approx)
Right Rear	97”
Left Rear	68”

Location	Length (Approx)
Right Front	62”
Left Front	53-1/2”

Front Brake Lines have same style fittings at each end.

(Kit Contents continue on following page)

Need help with your installation?

sales@superatv.com

www.superatv.com

1-855-743-3427

8:00am - 8:00pm EST M-Th
8:00am - 7:00pm EST Friday
9:00am - 2:00pm EST Saturday

Read instructions and view illustrations before beginning.

Thank You For Choosing

© 2022 SuperATV.com® All Rights Reserved.

(Kit Contents continued)

Item	Description
G	Rear CMP x 2
H	Left Spindle
J	Right Spindle
K	Left Bearing Carrier
L	Right Bearing Carrier
M	Brake Pad Retainer Clip x 4
P**	Front CMP x 2
Q*	Front Caliper Adapter x 2
R	Adapter Plate x 2
S	Rear Shim x 4
U	Left Bearing Adapter
V	Right Bearing Adapter

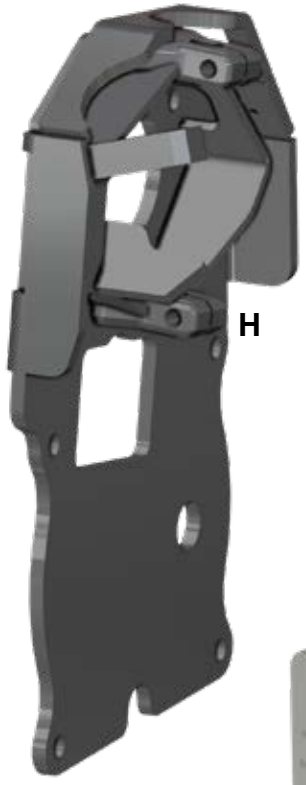

(Right)

(Left)

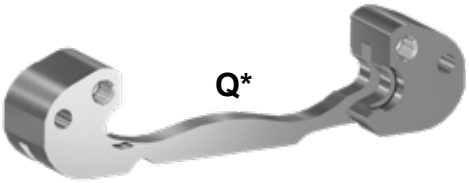

(not included or used with PGH8-1-75-601)

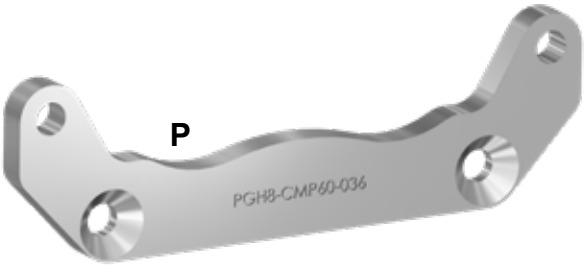

PGH8-1-75-601 Front CMP

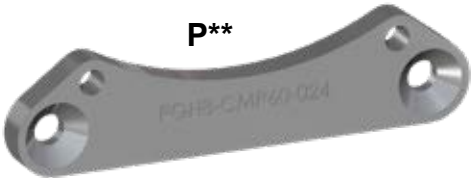

Liability Statement

SuperATV's® products are designed to best fit user's ATV/UTV under stock conditions. Adding, modifying, or fabricating any factory or aftermarket parts will void any warranty provided by SuperATV® and is not recommended. SuperATV's® products could interfere with other aftermarket accessories. If user has aftermarket products on machine, contact SuperATV® to verify that they will work together.

Although SuperATV® has thousands of satisfied customers, user should be aware that installing lift kits, long travel, or suspension kits, tires, etc. will change the ride of machine and may increase maintenance and part wear. Operating any off-road machine while, or after, consuming alcohol and/or drugs increases risk of bodily harm or death. No warranty or representation is made as to this product's ability to protect user from severe injury or death. SuperATV® urges operators and occupants to wear a helmet and appropriate riding gear at all times.

By purchasing and installing SuperATV® products, user agrees that should damages occur, SuperATV® will not be held responsible for loss of time, use, labor fees, replacement parts, or freight charges. SuperATV®, nor any 3rd party, will not be held responsible for any direct, indirect, incidental, special, or consequential damages that result from any product purchased from SuperATV®. The total liability of seller to user for all damages, losses, and causes of action, if any, shall not exceed the total purchase price paid for the product that gave rise to the claim.

SuperATV® will warranty only parts provided by SuperATV®. Any damage or problems with OEM housings, bearings, seals, or other manufacturers' products will not be covered by SuperATV®. SuperATV® parts and products are not warrantied if item was not installed properly, misused, or modified.

Installing, adding, modifying, or fabricating any factory or aftermarket product to your ATV/UTV may violate certain local, state, and federal laws. Be advised that laws vary depending on town, city, county, state, etc. Use of certain products on public streets, roads, or highways may be in violation law. The Buyer is solely and exclusively legally and personally responsible for any violation of the law by the installation or use of the product. You must abide by all local, state, and federal laws, including but not limited to vehicle safety, traffic laws, and ordinances. It is your responsibility to know the laws and how they apply to you.

The Buyer is responsible to fully understand the capability and limitations of his/her vehicle according to manufacturer specifications, warnings and instructions and agrees to hold SuperATV® harmless from any damage resulting from failure to adhere to such specifications, warnings and/ or instructions. The Buyer is also responsible to obey all applicable federal, state, and local laws and ordinances when operating his/her vehicle while using this product, and the Buyer agrees to hold SuperATV® harmless from any violation thereof.

Read ALL instructions prior to operating Portal Gear Hubs. Injury to personnel, portal gear hub, and/or machine failure may be caused by improper installation, maintenance or operation.

• It is dangerous to get under a jacked-up vehicle. The vehicle could slip off the jack and fall on you. You could be crushed. Never place any part of your body under a vehicle that is on a jack. Never start or run the engine while the vehicle is on a jack. If you need to get under a raised vehicle, take it to a service center where it can be raised on a lift.

• Hot oil can cause severe burns. Use extreme care when removing lubrication plugs and when working close to a unit that has been in operation.

• Check lube level between scheduled lube changes to insure that proper lube level is maintained. Inspect the tightness of mounting bolts, excessive heating, or any unusual noise or vibration.

• Serious personal injury may occur as a result of improperly performed maintenance, adjustments or repairs.

• Always be extremely careful when working on the portal gear hub. Always follow commonly accepted safety practices and general common sense. Never risk personal injury.

• Do not operate the portal gear hub without proper lube and correct amount.

For safe operation and to maintain the unit warranty, when changing a provided fastener for any reason, it becomes the responsibility of the person making the change to properly account for fastener grade, thread engagement, load, tightening torque and the means of torque retention.

• Mounting bolts should be periodically checked to ensure that the unit is firmly anchored for proper operation.

• These instructions are not intended to cover all details or variations in equipment, nor provide for every possible contingency to be met in connection with selection, installation, operation, and maintenance.

Should further information be desired or should particular problems arise which are not covered sufficiently for the Buyer's purpose, the matter should be referred to SuperATV®.

In the event of the resale of any of the goods, in whatever form, Resellers/Buyers will include the following language in a conspicuous place and in a conspicuous manner in a written agreement covering such sale:

The manufacturer makes no warranties or representations, express or implied, by operation of law or otherwise, as to the merchantability or fitness for a particular purpose of the goods sold hereunder. Buyer acknowledges that it alone has determined that the goods purchased hereunder will suitably meet the requirements of their intended use. In no event will the manufacturer be liable for consequential, incidental or other damages. Even if the repair or replacement remedy shall be deemed to have failed of its essential purpose under Section 2-719 of the Uniform Commercial Code, the manufacturer shall have no liability to Buyer for consequential damages.

Resellers/Buyers agree to also include this entire document including the danger, warnings and cautions above in a conspicuous place and in a conspicuous manner in writing to instruct users on the safe usage of the product.

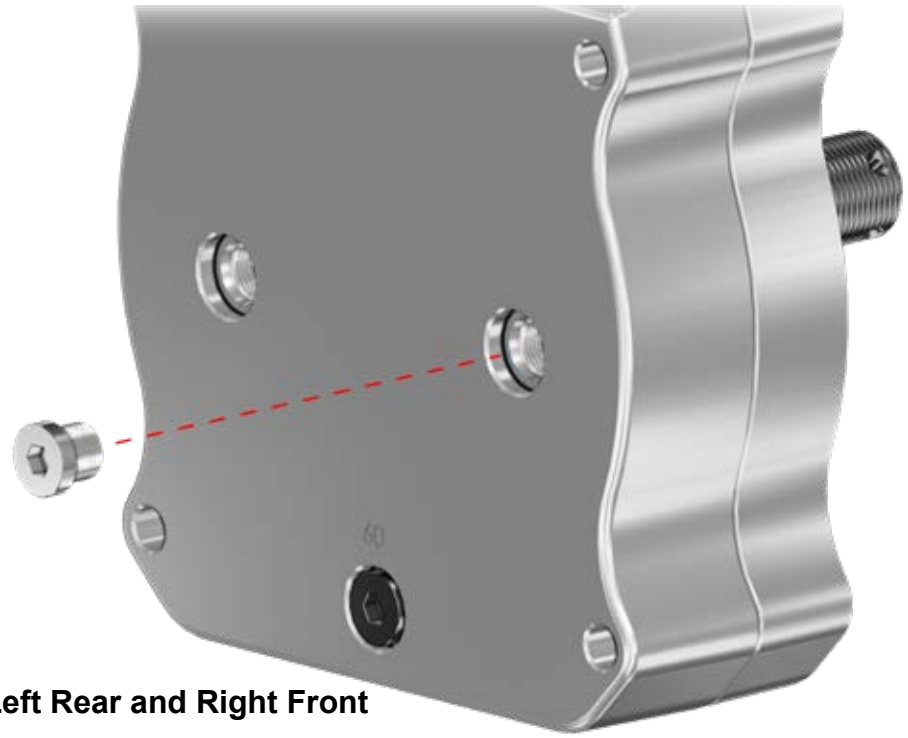

Left Rear and Right Front

Drain Plug

Install into Drains into locations shown.
Torque to 10 ft/lbs.

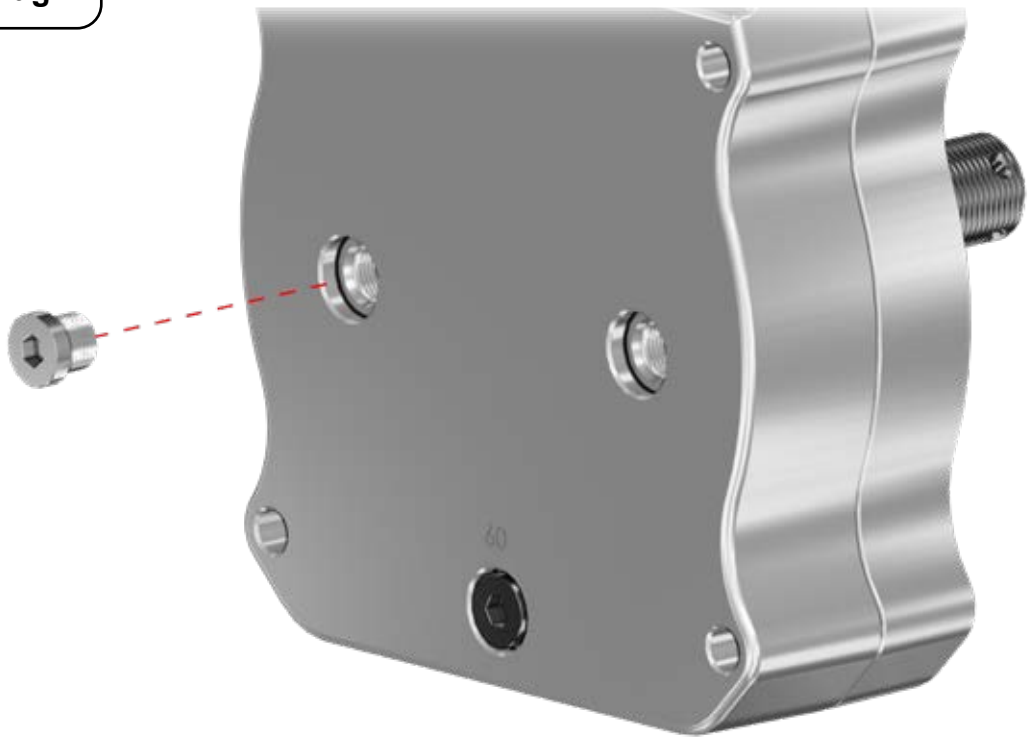

Right Rear and Left Front

DO NOT USE IMPACT WRENCH WHEN INSTALLING ANY HARDWARE INTO HOUSING

Front Components Removal: *Keep all components removed from machine.*

- Remove Bracket Pin.

- Remove Caliper

- Remove Pads and Bracket.

REPEAT FOR OPPOSITE SIDE.

Rear Components Removal: *Keep all components removed from machine.*

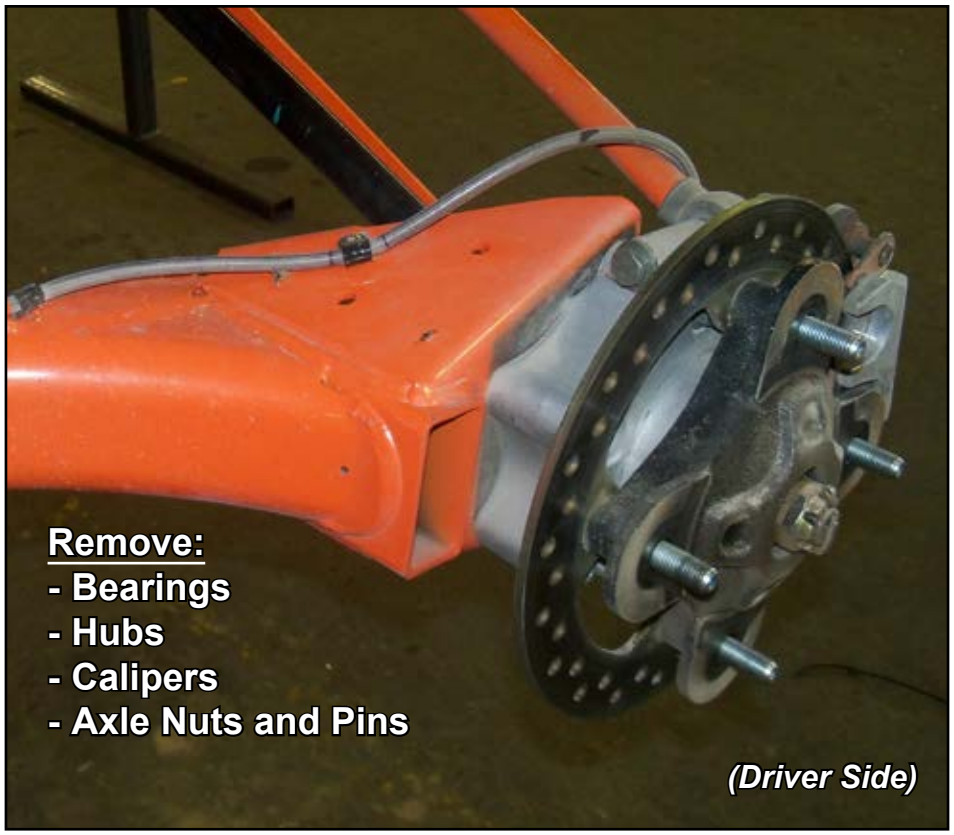

remove Brake Lines if 7” - 10” lift kit is installed

Use Lug Nut removed from machine to verify correct Wheel Stud installation.

Install provided Studs into Rotors (A):
- See “Wheel Hub Bolt Patterns”.
- Note machines bolt pattern and lug size.
- Set Rotors (A) aside when complete.

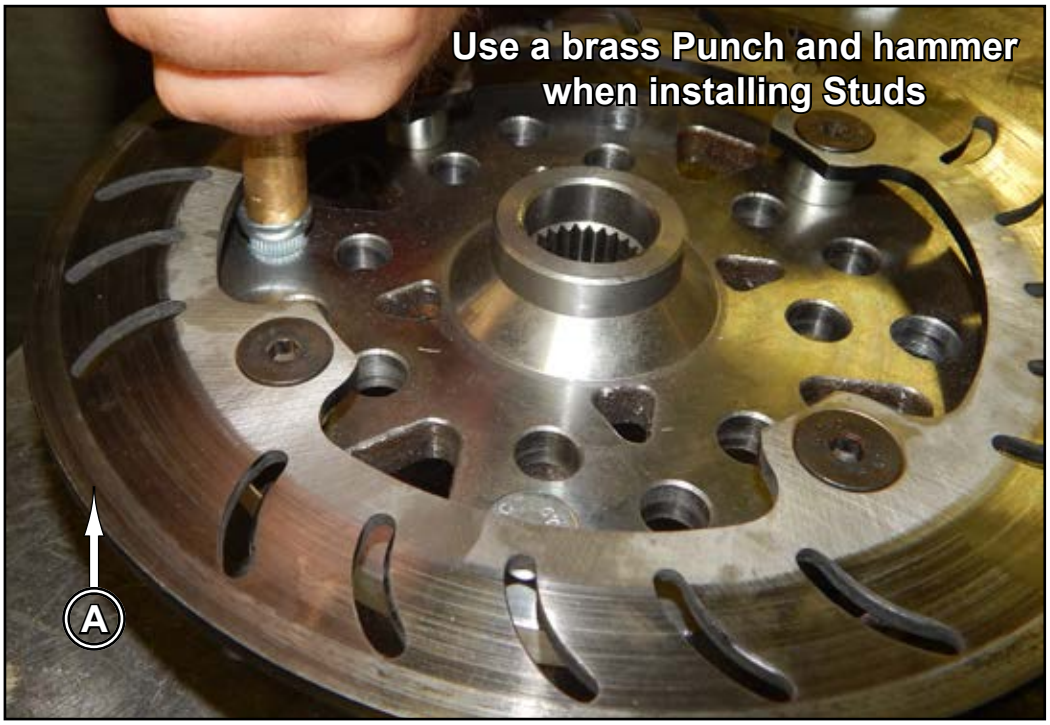

Wheel Hub Bolt Patterns

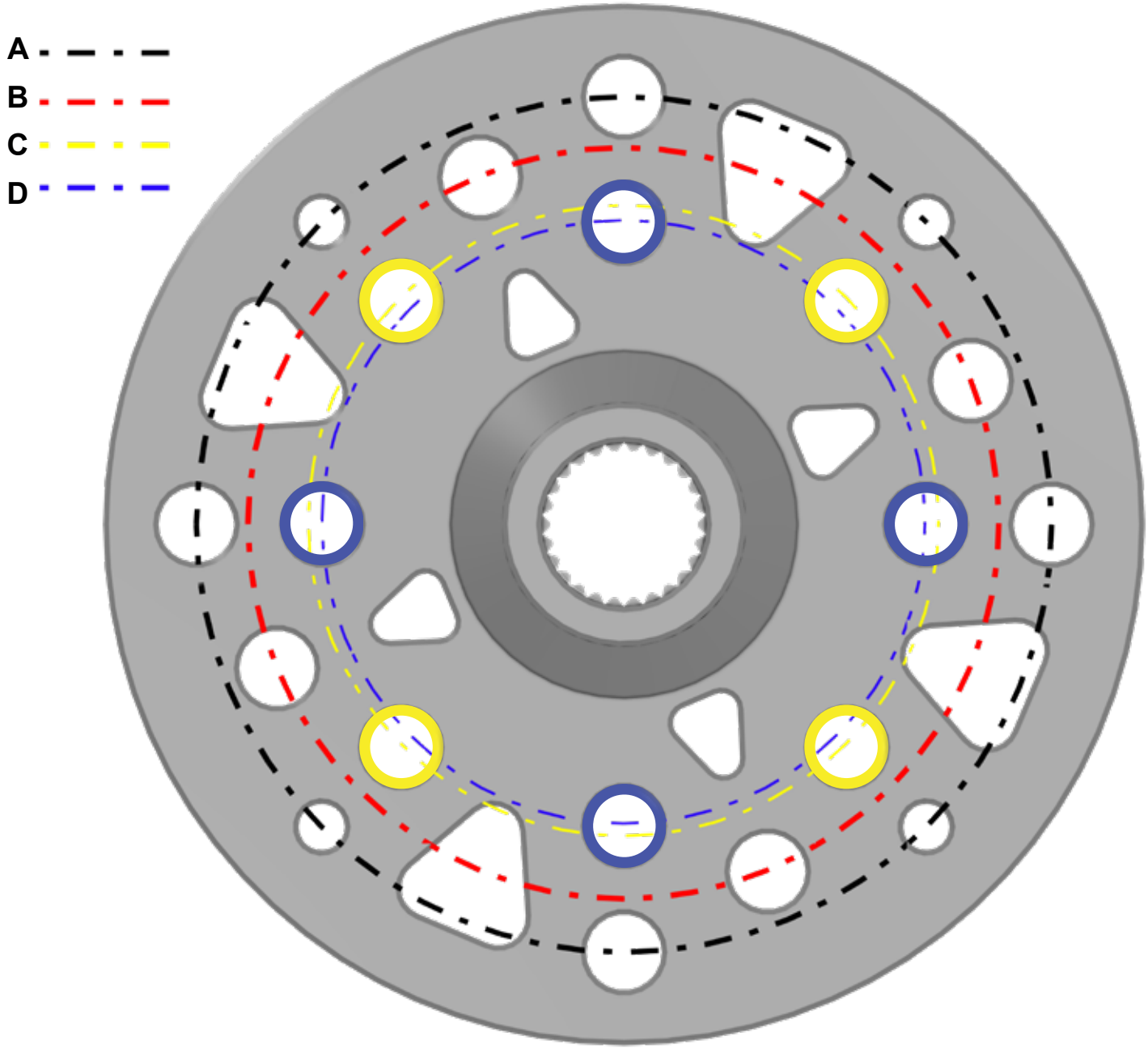

Pattern	Machine	Diameter
A	Polaris	156mm
B	Can-Am/Teryx4	137mm
C	Arctic Cat	115mm
D	Honda/Yamaha	110mm

Front: *do not tighten hardware completely unless noted.*

- Secure Left Spindle (H) to A-Arms with stock hardware; tighten.
- Secure Tie Rod End to Left Spindle (H); tighten.

Machines with SuperATV Heavy Duty Tie Rod Ends must use provided hardware shown when securing to Steering Arms.

M12 Nylock Nut

M10 Nylock Nut

(Qty. 2 each)

Front continued:

- Install Gear Box (B) and Front CMP (P) to Left Spindle (H) with hardware shown.
- Secure stock Axle with Recessed Nut (D); use thread locker.

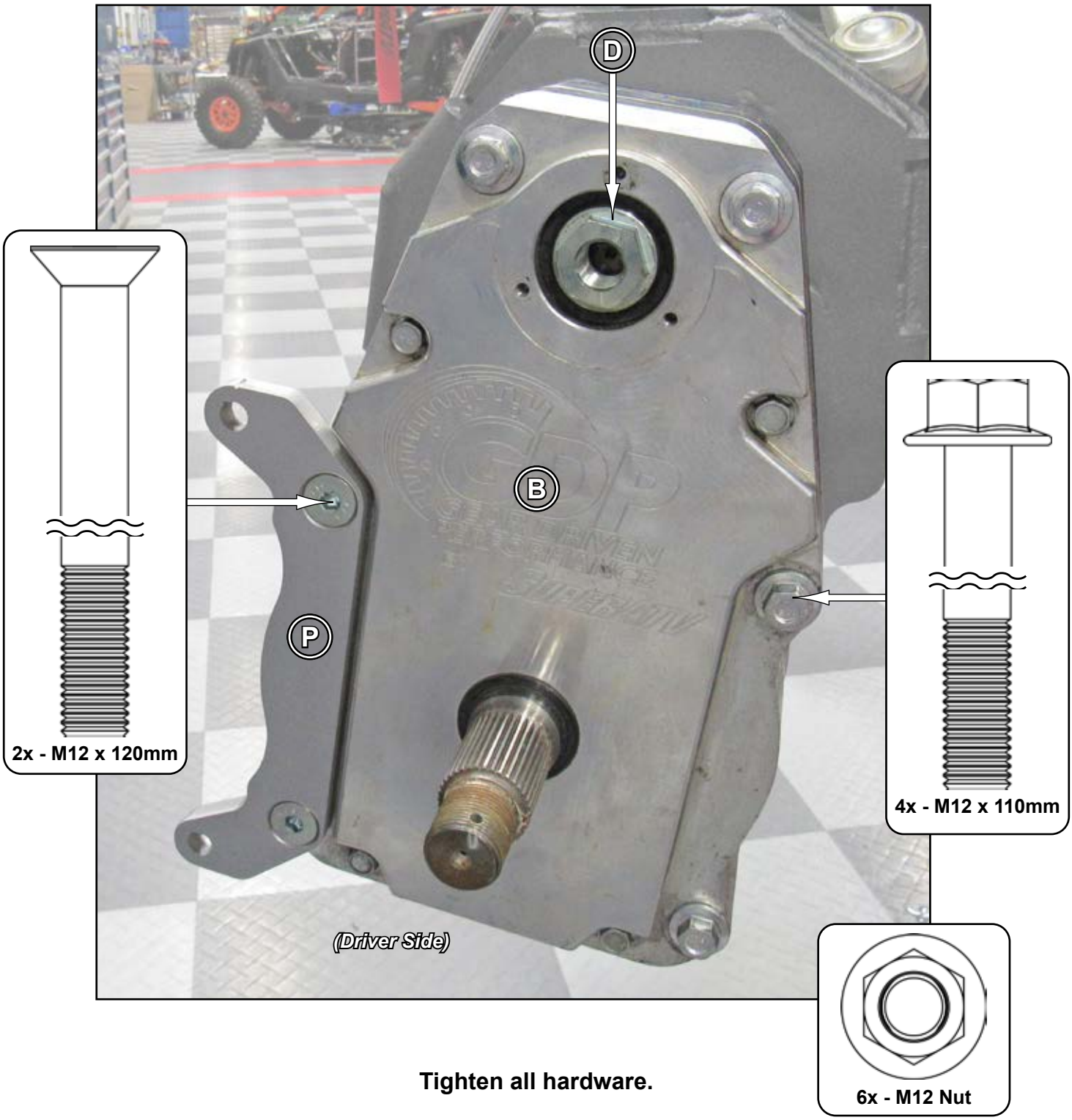

Tighten all hardware.

Front continued:

- Install Gasket (E) and Cap (C) to Gear Box (B) with hardware shown; tighten.
- Install Rotor (A) to Gear Box Axle Shaft with hardware shown.

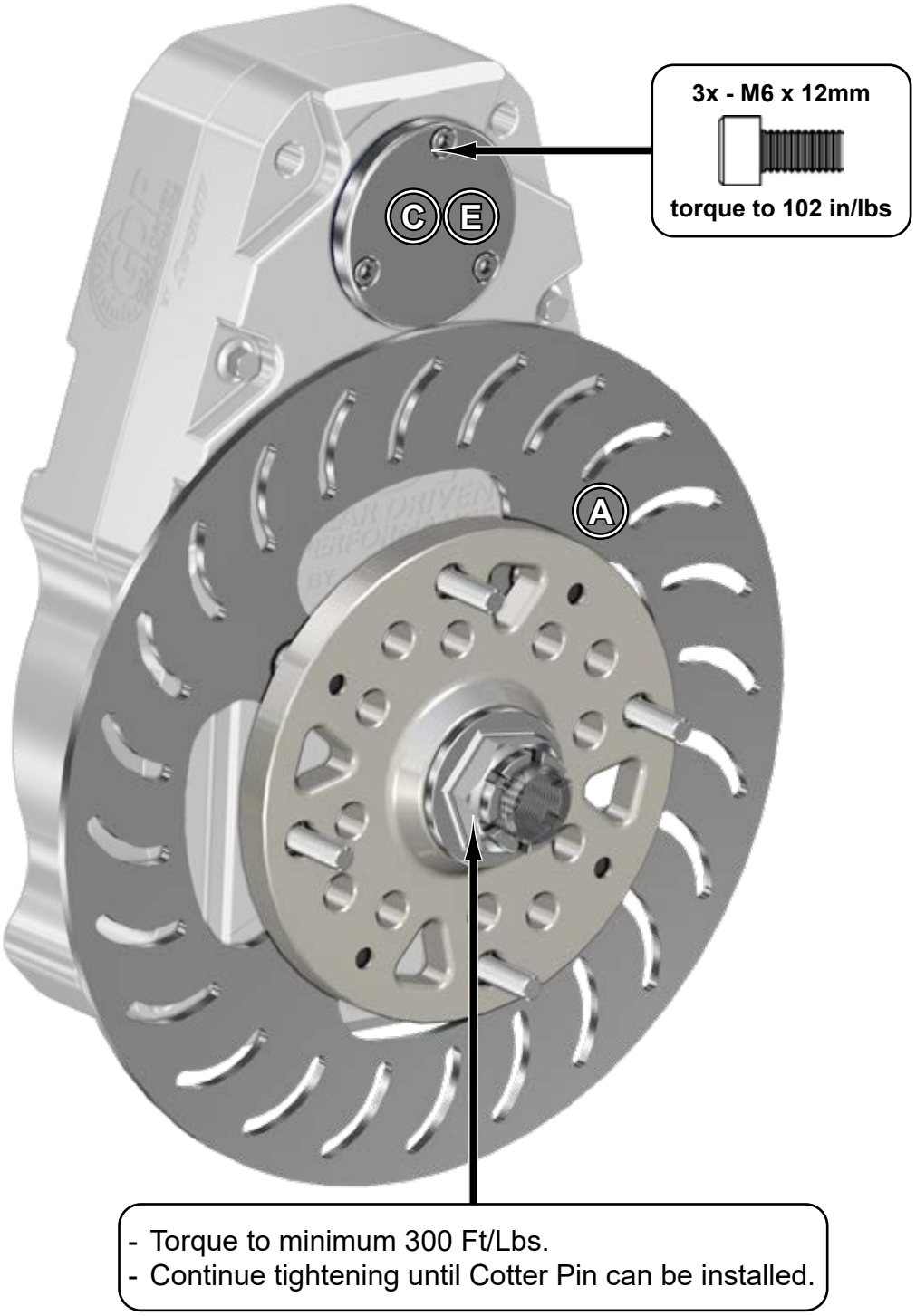

Repeat steps for opposite side.

PGH8-1-75-601 Front Calipers Mount directly to Front CMP's.
Pages 12 and 13 not applicable.

Front continued:

- Install provided Front Brake Lines.
- Secure Front Caliper Adapter (Q) to Front CMP (P) with stock hardware; ***do not tighten.***
- Install Brake Pad Retainer Clips (M) into Front Caliper Adapter (Q).
- Install Bracket Pins into Front Caliper Adapter (Q).

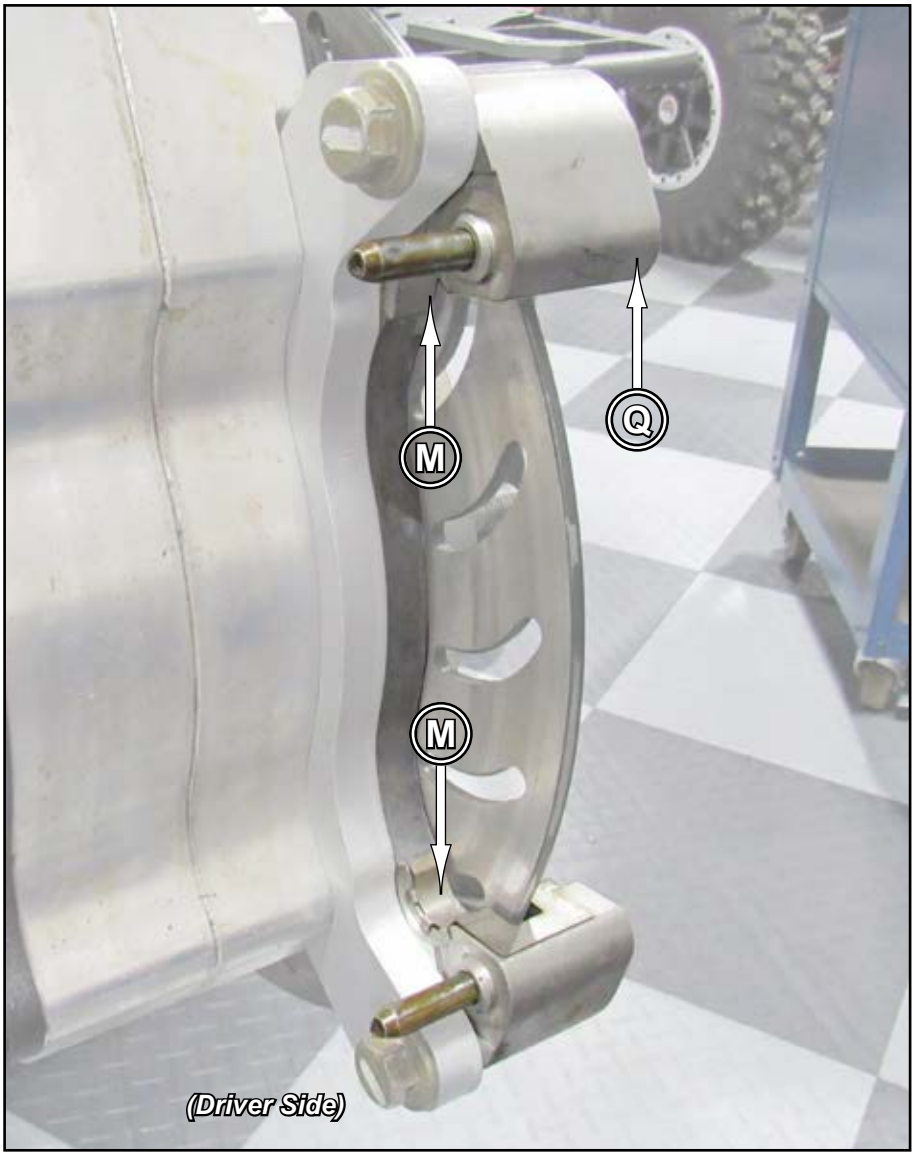

Front continued:

- Install Pads into Brake Pad Retainer Clips (M); tighten stock hardware.
- Secure Caliper to Front Caliper Adapter (Q) with Bracket Pins. Tighten Bracket Pins.
- Tighten Front Caliper Adapter (Q) hardware.
- Replace stock Bleeder with provided Bleeder.
- Ensure that no binding occurs after Brake Lines have been installed and secured.

Secure Brakelines to Arms and Bearing Carrier with components shown.

Repeat steps for opposite side.

Rear: *do not tighten hardware completely unless noted.*

- Place Left Bearing Adapter (U) onto Left Bearing Carrier (K) and install hardware shown.

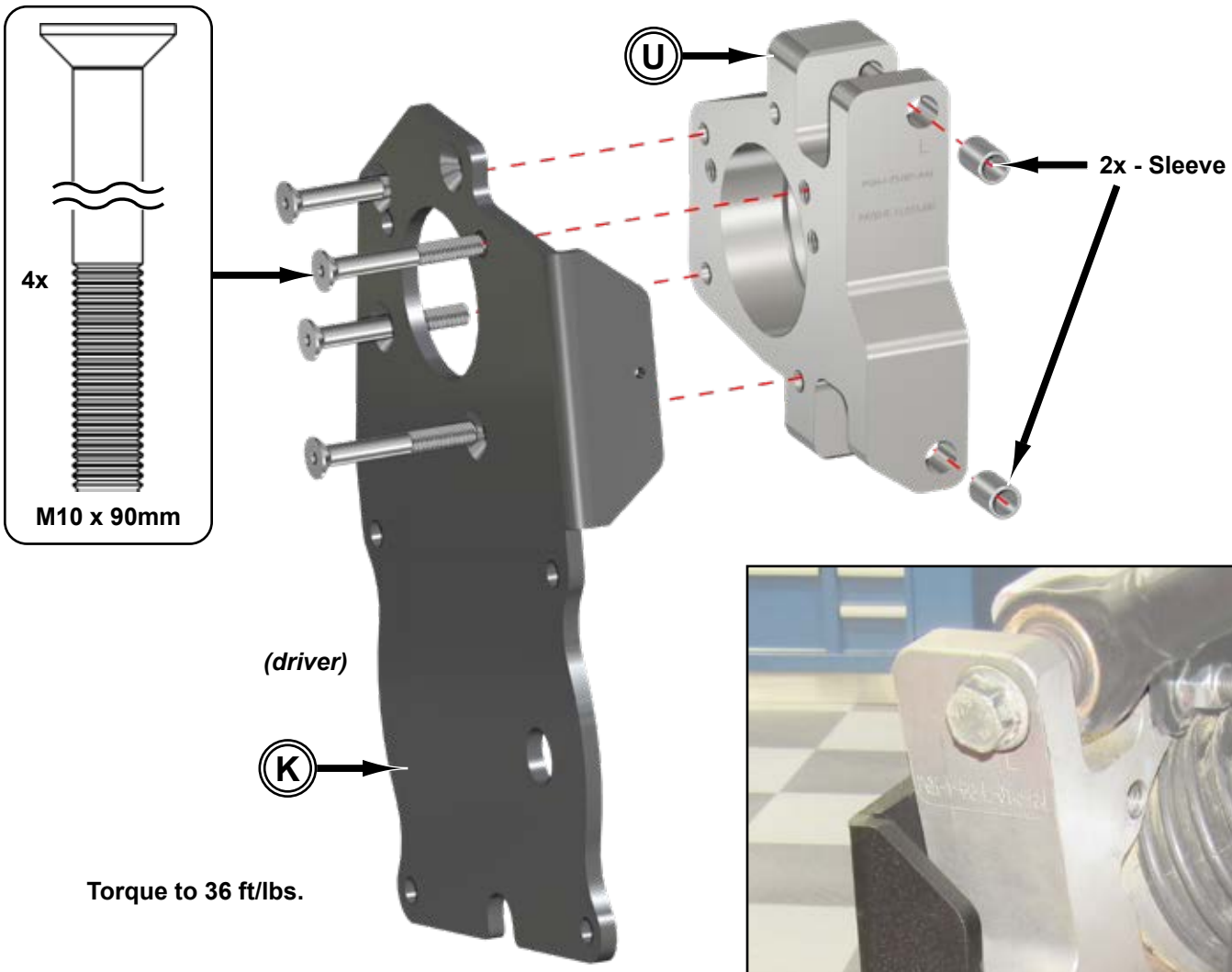

Torque to 36 ft/lbs.

- Secure assembly to Trailing Arm with hardware shown.
- Secure Radius Arms to Left Bearing Adapter (U) with stock hardware.
- Tighten all hardware.

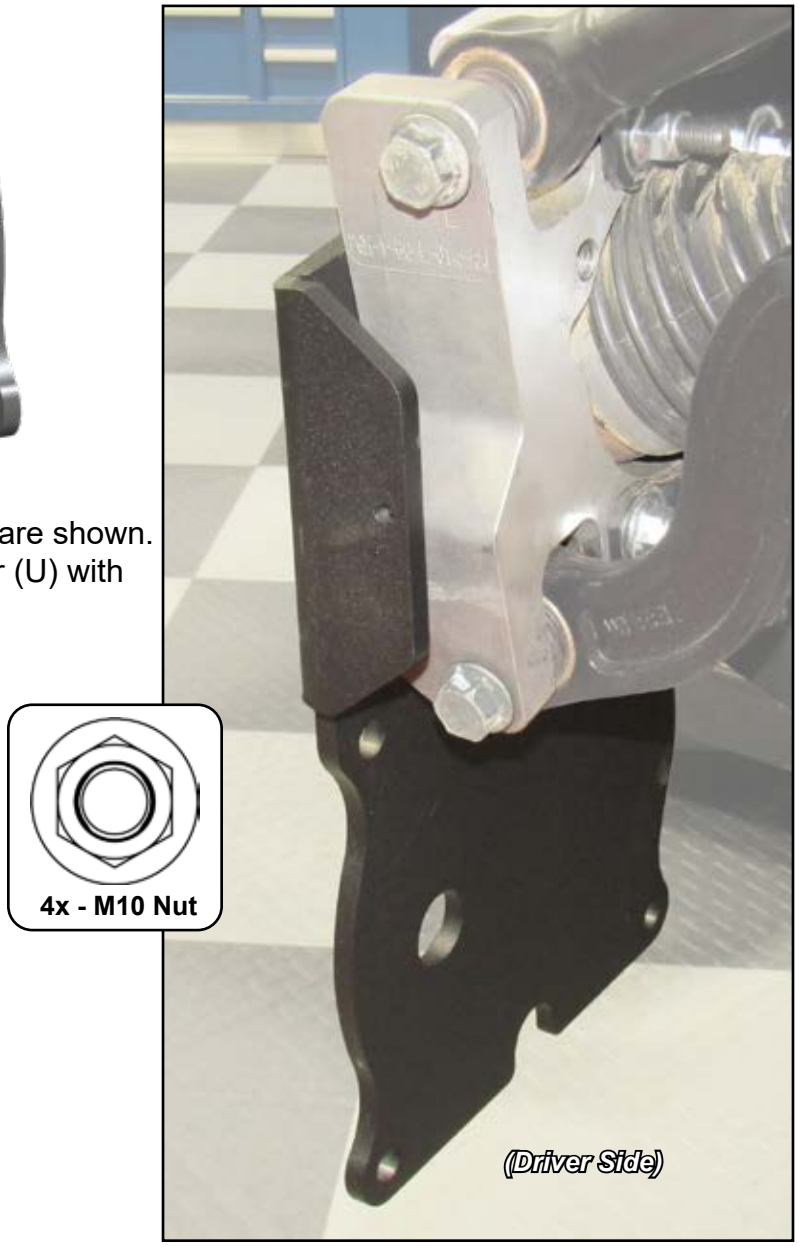

Rear continued:

- Install Gear Box (B) and Rear CMP (G) to Left Bearing Carrier (L) with hardware shown.
- Secure stock Axle with Recessed Nut (D); use thread locker.

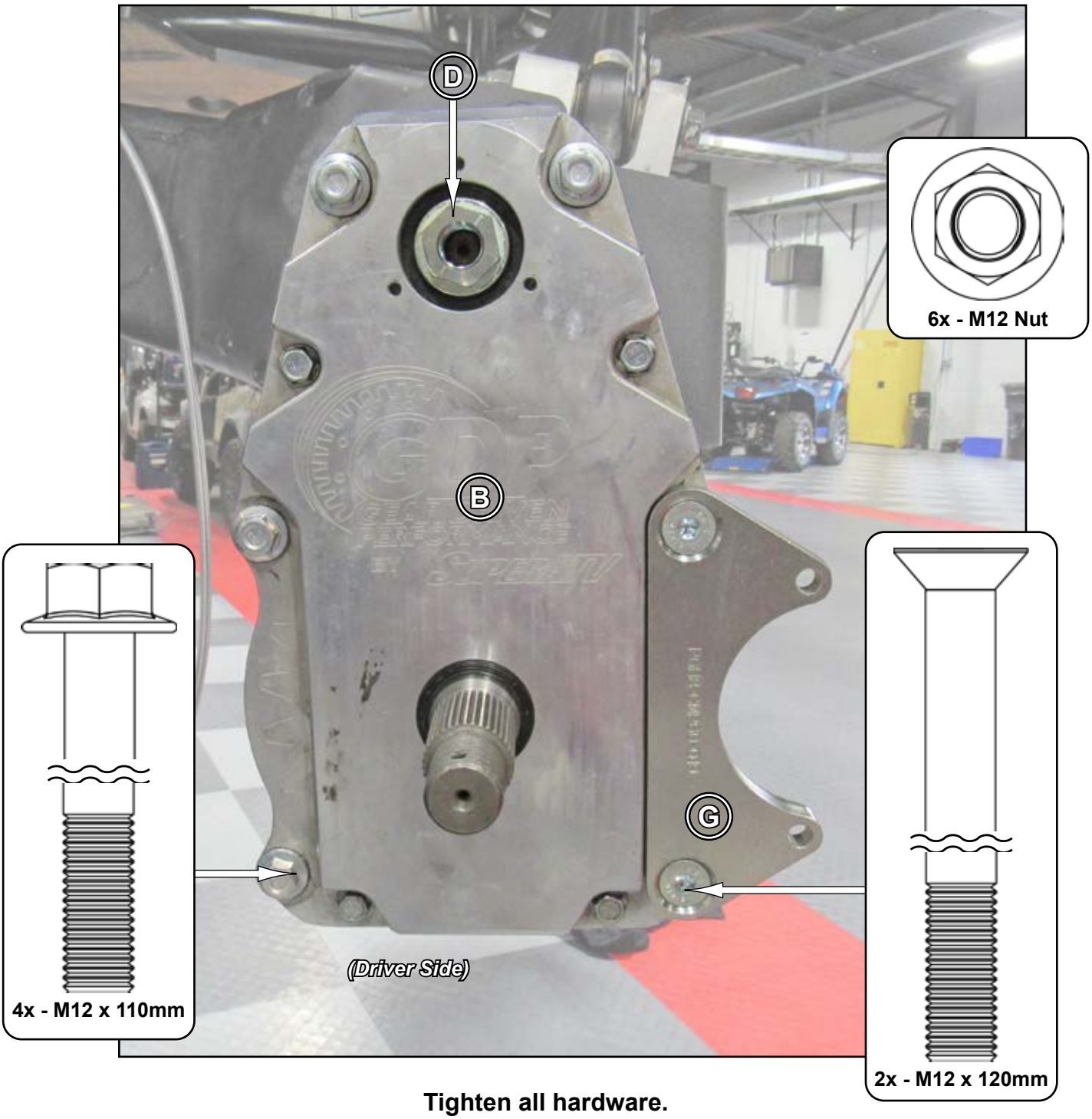

Tighten all hardware.

Rear continued:

- Install Gasket (E) and Cap (C) to Gear Box (B) with hardware shown; tighten.
- Install Rotor (A) to Gear Box Axle Shaft with hardware shown.

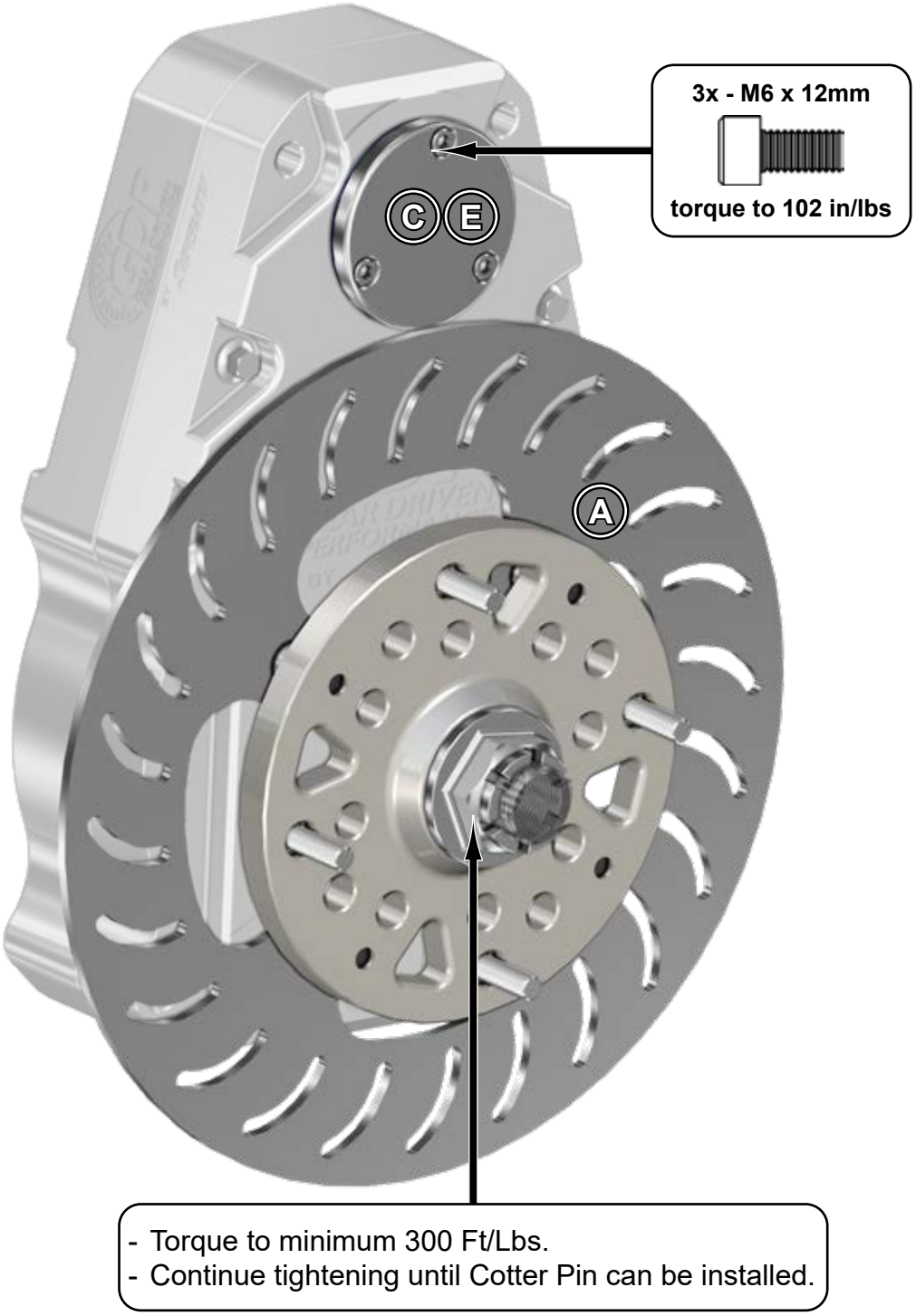

Repeat steps for opposite side.

Brake Caliper:

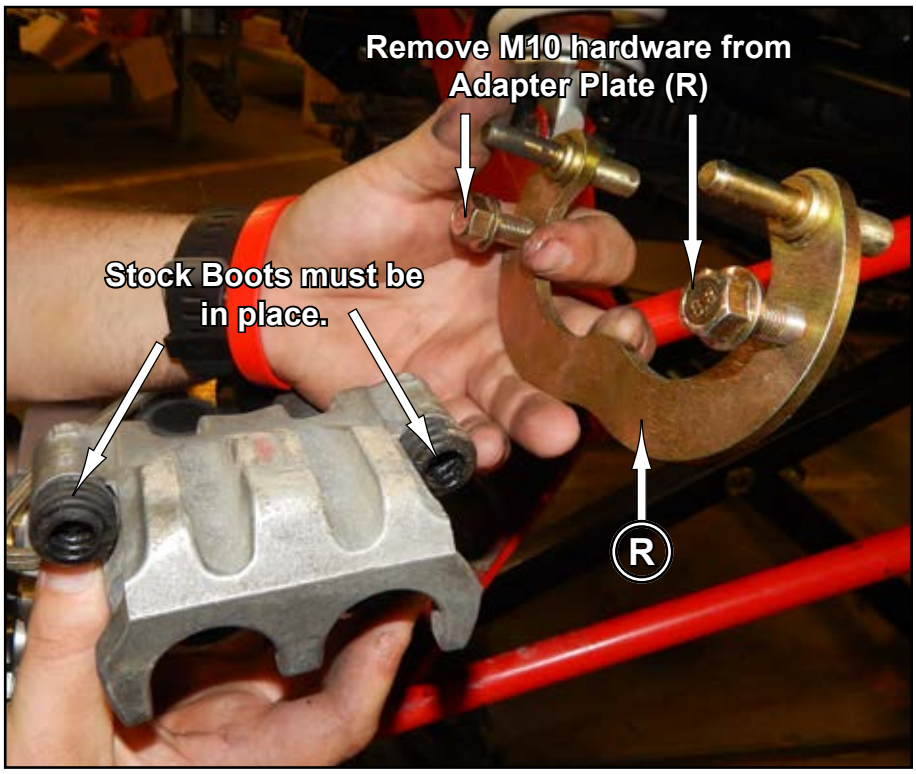

Brake Caliper continued:

- Install provided Rear Brake Lines.
- Install Adapter Plate (R) / Caliper assembly to Rear CMP (G) with previously removed M10 hardware.
  - In certain instances, interference may occur between Caliper and Rotor. Install provided Rear Shim (S) between Caliper Mount and Gear Box.
- Repeat steps for opposite side.
- Ensure that no binding occurs after Brake Lines have been installed and secured.

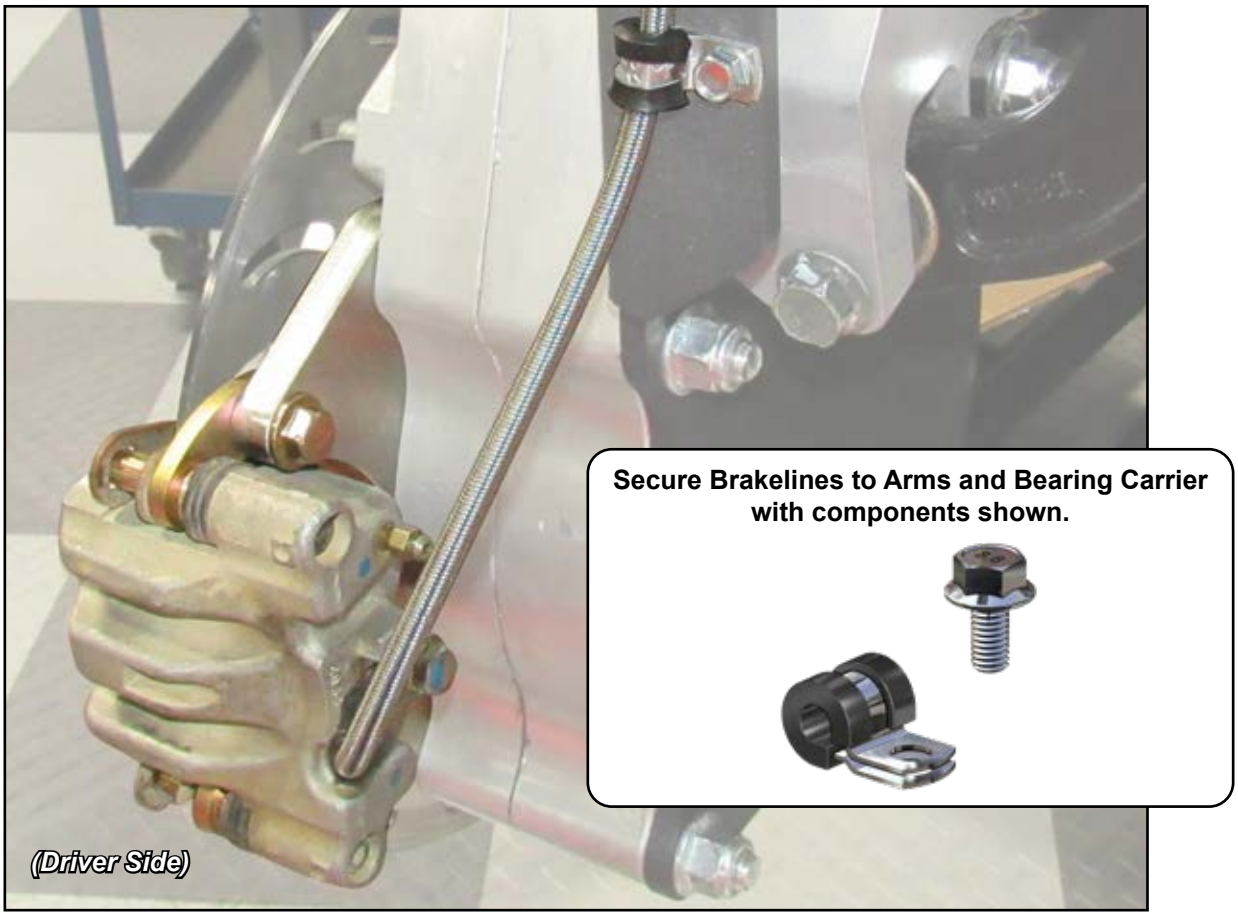

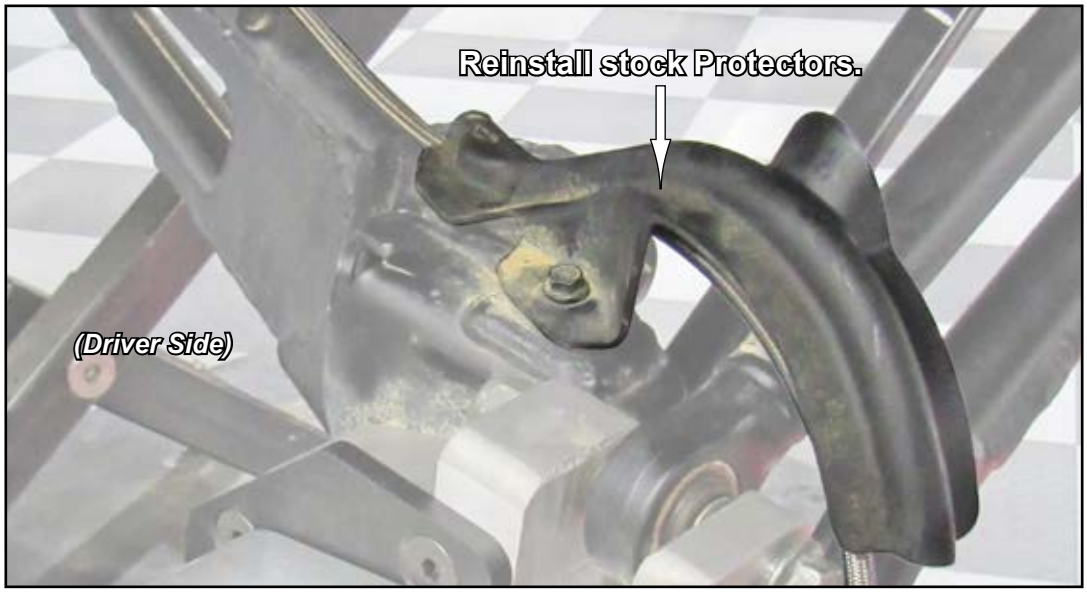

- Attach a hose to a funnel and fill each Gear Box with SuperATV Portal Blood.
- Fill up to fill holes.
- Install Drain Plugs to Gear Box.