2753 Michigan Road • Madison, Indiana 47250 • 855-743-3427

INSTALLATION INSTRUCTIONS

Gen 3 Portal Gear Hubs - 8”

for Honda Talon X

Do not discard packaging until product has been successfully installed.

WHEN FILLING GEAR BOX USE ONLY SUPERATV PORTAL BLOOD. USING GREASE WILL CAUSE FAILURE OF GEARS AND BEARINGS. USING GREASE WILL VOID THE WARRANTY.

A



B



U



Item	Description
A	Rear Rotor x 2
B	Gear Box x 4
C	Cap x 4
D	Recessed Nut x 4
E	Gasket x 4
U	Front Rotor x 2

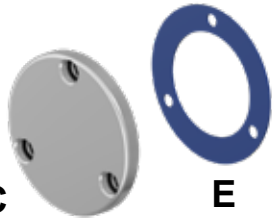

C E

2019 - 2021 year:

Recessed Nuts are PGH-RN-017.



2022 year:

Recessed Nuts are PGH-RN-126



PGH8-3-109-451

Recessed Nuts are PGH-RN-131



(Kit Contents continue on following pages)

Need help with your installation?

sales@superatv.com

www.superatv.com

1-855-743-3427

8:00am - 8:00pm EST M-Th
8:00am - 7:00pm EST Friday
9:00am - 2:00pm EST Saturday

Read instructions and view illustrations before beginning.

Thank You For Choosing

© 2019 SuperATV.com® All Rights Reserved.

Rev IN-PGH8-3-82-451 / IN-PGH8-3-82-452 / IN-PGH8-3-109-451 1/21/2025

(Kit Contents continued)

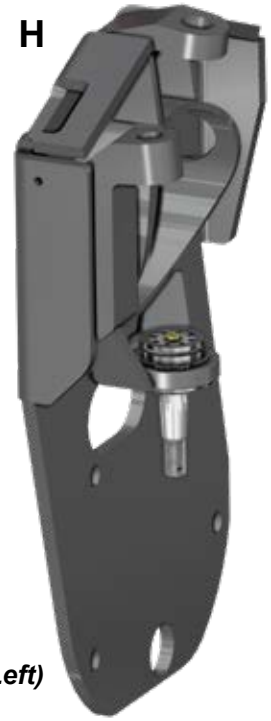

(Left)

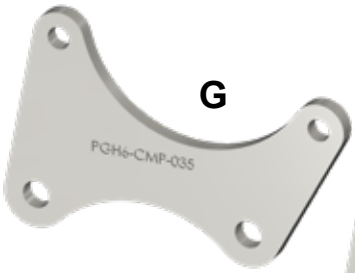

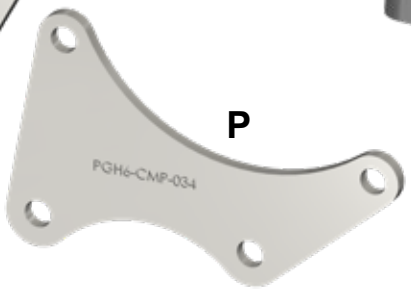





(Right)

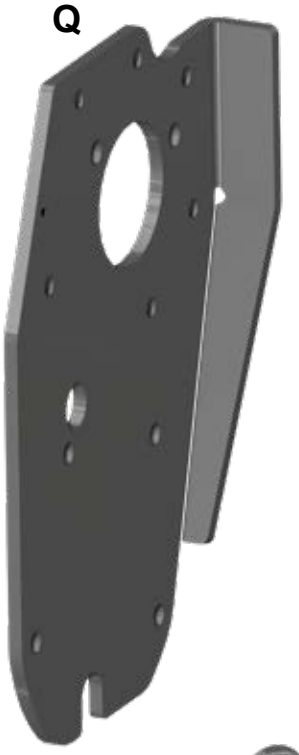



Item	Description
G	Rear Caliper Mounting Bracket x 2
H	Left Spindle
J	Right Spindle
K	Left Bearing Carrier
L	Right Bearing Carrier
P	Front Caliper Mounting Bracket x 2
Q	Left Base Plate
R	Right Base Plate
S	Boot x 2
V	CMP Spacer x 8



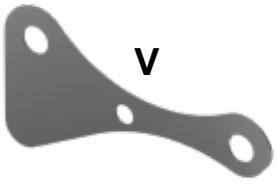



(Kit Contents continued)

Front Brake Line style



Rear Brake Line style



PGH8-3-82-451 / PGH8-3-109-451 Brake Lines

Length (Approximate)	Location
51-3/16”	Right Front
55-1/8”	Left Front

Length (Approximate)	Location
44-5/16”	Right Rear
54-7/16”	Left Rear

PGH8-3-82-452 Brake Lines

Length (Approximate)	Location
75-3/8”	Right Front
69-1/2”	Left Front

Length (Approximate)	Location
56-1/4”	Rear x 2

Liability Statement

SuperATV's® products are designed to best fit user's ATV/UTV under stock conditions. Adding, modifying, or fabricating any factory or aftermarket parts will void any warranty provided by SuperATV® and is not recommended. SuperATV's® products could interfere with other aftermarket accessories. If user has aftermarket products on machine, contact SuperATV® to verify that they will work together.

Although SuperATV® has thousands of satisfied customers, user should be aware that installing lift kits, long travel, or suspension kits, tires, etc. will change the ride of machine and may increase maintenance and part wear. Operating any off-road machine while, or after, consuming alcohol and/or drugs increases risk of bodily harm or death. No warranty or representation is made as to this product's ability to protect user from severe injury or death. SuperATV® urges operators and occupants to wear a helmet and appropriate riding gear at all times.

By purchasing and installing SuperATV® products, user agrees that should damages occur, SuperATV® will not be held responsible for loss of time, use, labor fees, replacement parts, or freight charges. SuperATV®, nor any 3rd party, will not be held responsible for any direct, indirect, incidental, special, or consequential damages that result from any product purchased from SuperATV®. The total liability of seller to user for all damages, losses, and causes of action, if any, shall not exceed the total purchase price paid for the product that gave rise to the claim.

SuperATV® will warranty only parts provided by SuperATV®. Any damage or problems with OEM housings, bearings, seals, or other manufacturers' products will not be covered by SuperATV®. SuperATV® parts and products are not warrantied if item was not installed properly, misused, or modified.

Installing, adding, modifying, or fabricating any factory or aftermarket product to your ATV/UTV may violate certain local, state, and federal laws. Be advised that laws vary depending on town, city, county, state, etc. Use of certain products on public streets, roads, or highways may be in violation law. The Buyer is solely and exclusively legally and personally responsible for any violation of the law by the installation or use of the product. You must abide by all local, state, and federal laws, including but not limited to vehicle safety, traffic laws, and ordinances. It is your responsibility to know the laws and how they apply to you.

The Buyer is responsible to fully understand the capability and limitations of his/her vehicle according to manufacturer specifications, warnings and instructions and agrees to hold SuperATV® harmless from any damage resulting from failure to adhere to such specifications, warnings and/ or instructions. The Buyer is also responsible to obey all applicable federal, state, and local laws and ordinances when operating his/her vehicle while using this product, and the Buyer agrees to hold SuperATV® harmless from any violation thereof.

Read ALL instructions prior to operating Portal Gear Hubs. Injury to personnel, portal gear hub, and/or machine failure may be caused by improper installation, maintenance or operation.
• It is dangerous to get under a jacked-up vehicle. The vehicle could slip off the jack and fall on you. You could be crushed. Never place any part of your body under a vehicle that is on a jack. Never start or run the engine while the vehicle is on a jack. If you need to get under a raised vehicle, take it to a service center where it can be raised on a lift.
• Hot oil can cause severe burns. Use extreme care when removing lubrication plugs and when working close to a unit that has been in operation.
• Check lube level between scheduled lube changes to insure that proper lube level is maintained. Inspect the tightness of mounting bolts, excessive heating, or any unusual noise or vibration.
• Serious personal injury may occur as a result of improperly performed maintenance, adjustments or repairs.
• Always be extremely careful when working on the portal gear hub. Always follow commonly accepted safety practices and general common sense. Never risk personal injury.
• Do not operate the portal gear hub without proper lube and correct amount.

For safe operation and to maintain the unit warranty, when changing a provided fastener for any reason, it becomes the responsibility of the person making the change to properly account for fastener grade, thread engagement, load, tightening torque and the means of torque retention.
• Mounting bolts should be periodically checked to ensure that the unit is firmly anchored for proper operation.
• These instructions are not intended to cover all details or variations in equipment, nor provide for every possible contingency to be met in connection with selection, installation, operation, and maintenance.
Should further information be desired or should particular problems arise which are not covered sufficiently for the Buyer's purpose, the matter should be referred to SuperATV®.

In the event of the resale of any of the goods, in whatever form, Resellers/Buyers will include the following language in a conspicuous place and in a conspicuous manner in a written agreement covering such sale:
The manufacturer makes no warranties or representations, express or implied, by operation of law or otherwise, as to the merchantability or fitness for a particular purpose of the goods sold hereunder. Buyer acknowledges that it alone has determined that the goods purchased hereunder will suitably meet the requirements of their intended use. In no event will the manufacturer be liable for consequential, incidental or other damages. Even if the repair or replacement remedy shall be deemed to have failed of its essential purpose under Section 2-719 of the Uniform Commercial Code, the manufacturer shall have no liability to Buyer for consequential damages.
Resellers/Buyers agree to also include this entire document including the danger, warnings and cautions above in a conspicuous place and in a conspicuous manner in writing to instruct users on the safe usage of the product.



install into Drain on each Gear Box.

Torque to 10 ft/lbs

DO NOT USE IMPACT WRENCH WHEN INSTALLING ANY HARDWARE INTO HOUSING

Front Components Removal: *Keep all components removed from machine.*

- Remove Brake Line from Upper A-Arm.
- Remove Axle hardware.
- Remove Caliper, Tie Rod, and A-Arms from Knuckle.

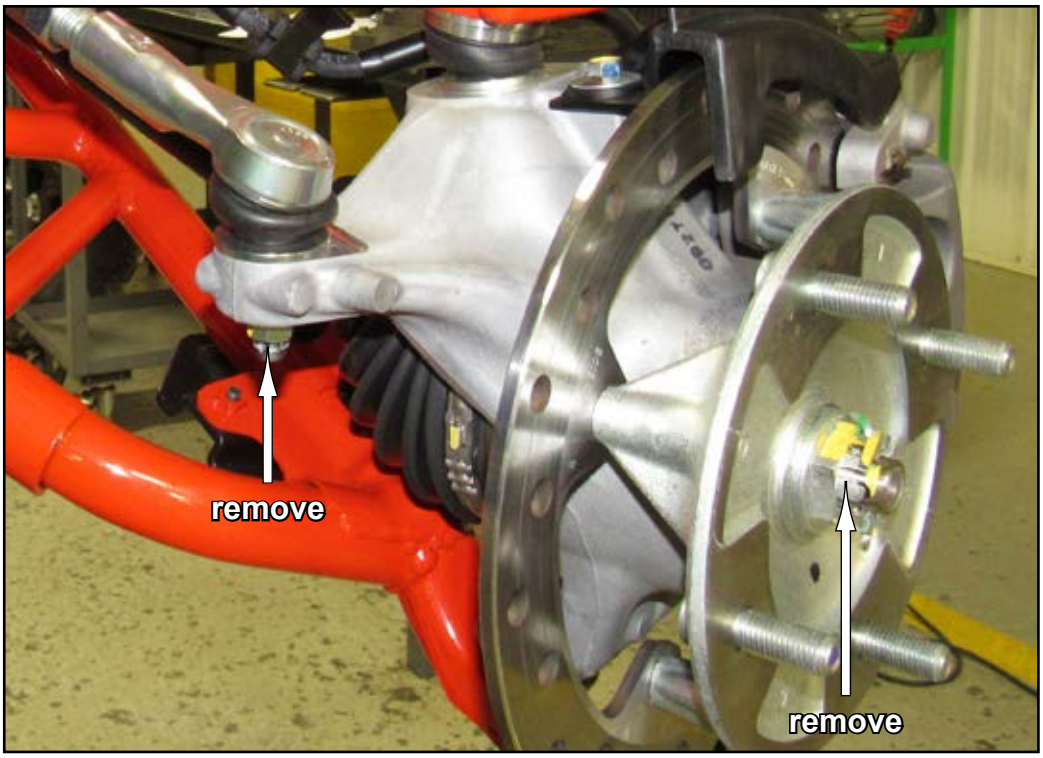

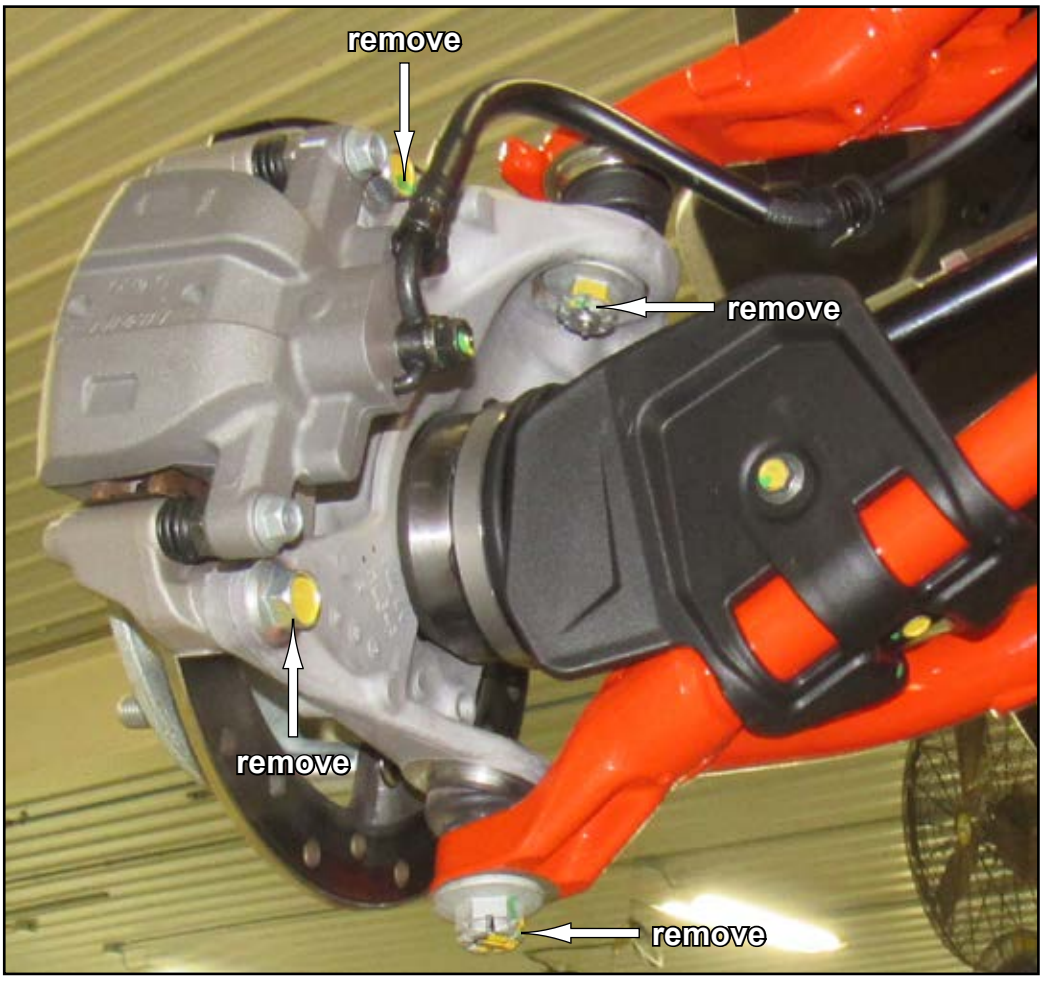

repeat for driver side

Front Brake Lines Removal:

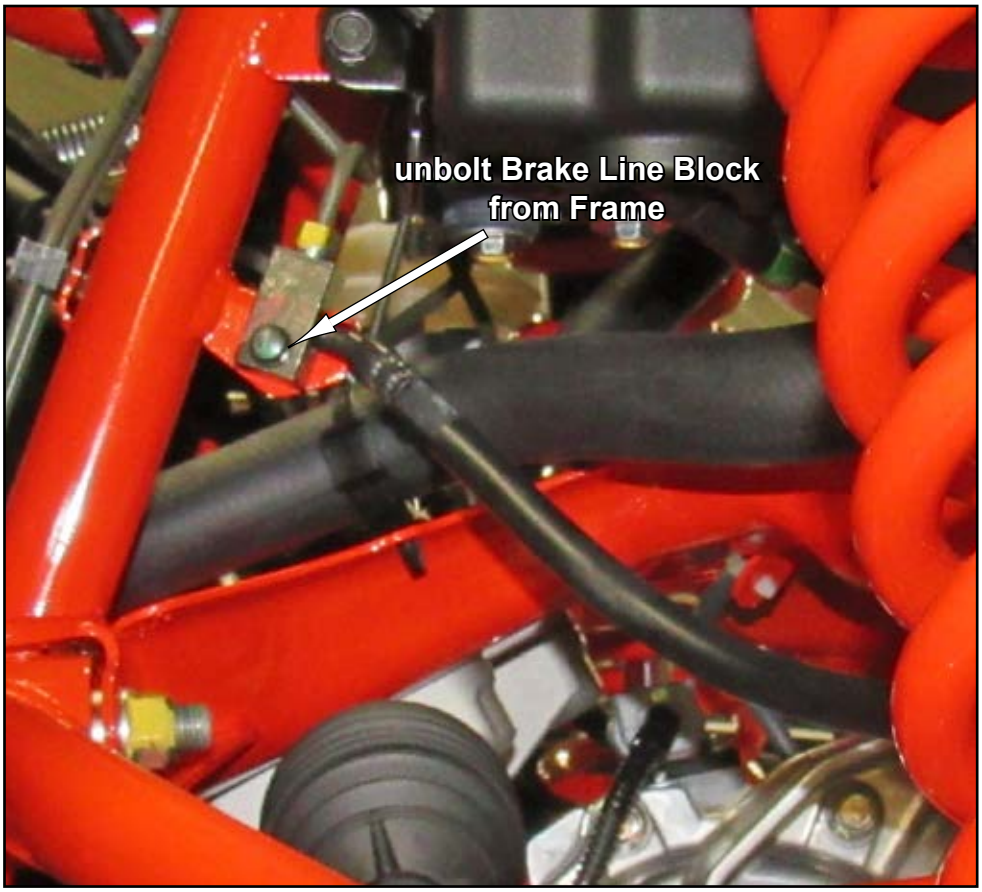

repeat for driver side

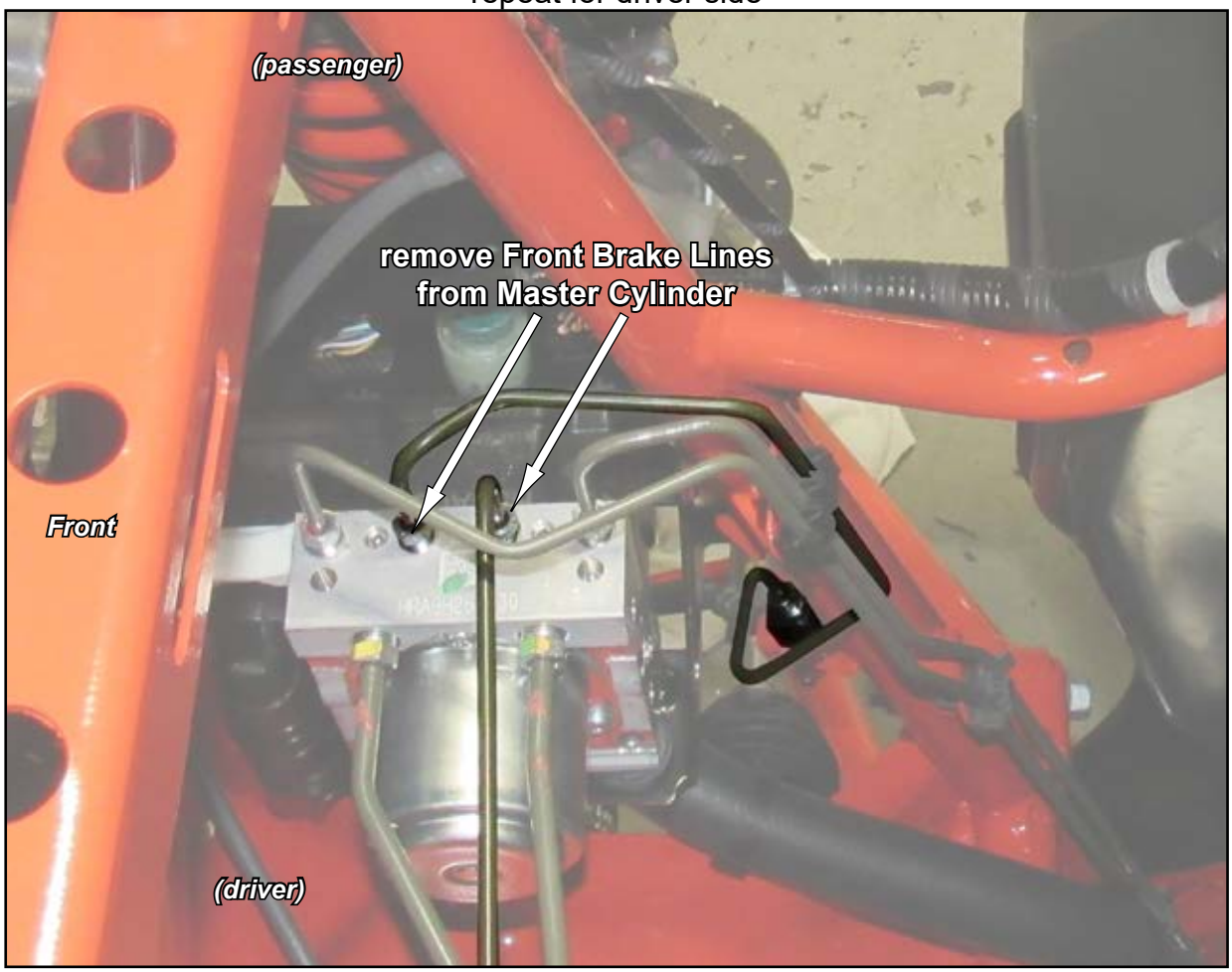

Rear Components Removal: *Keep all components removed from machine.*

- Remove Brake Line from Trailing Arm.
- Remove Axle hardware.
- Remove Caliper from Knuckle.
- Remove Hub.



Rear Components Removal continued: *Keep all components removed from machine.*

- Remove Radius Arms from Knuckle.
- Remove Knuckle.

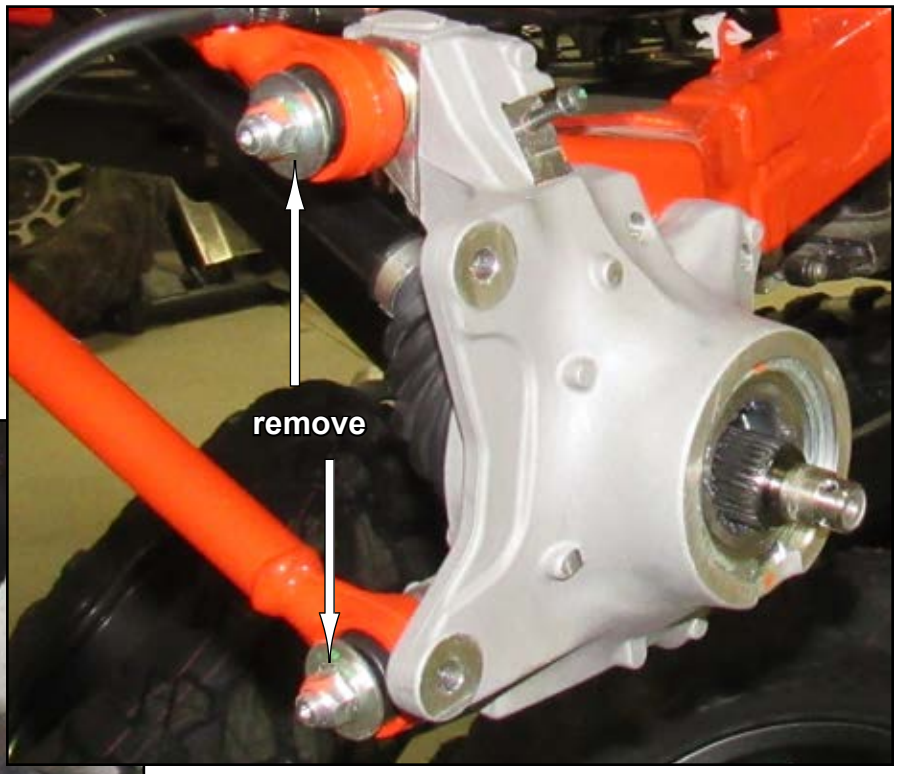



- Remove Brake Line from Rear Supply Line.

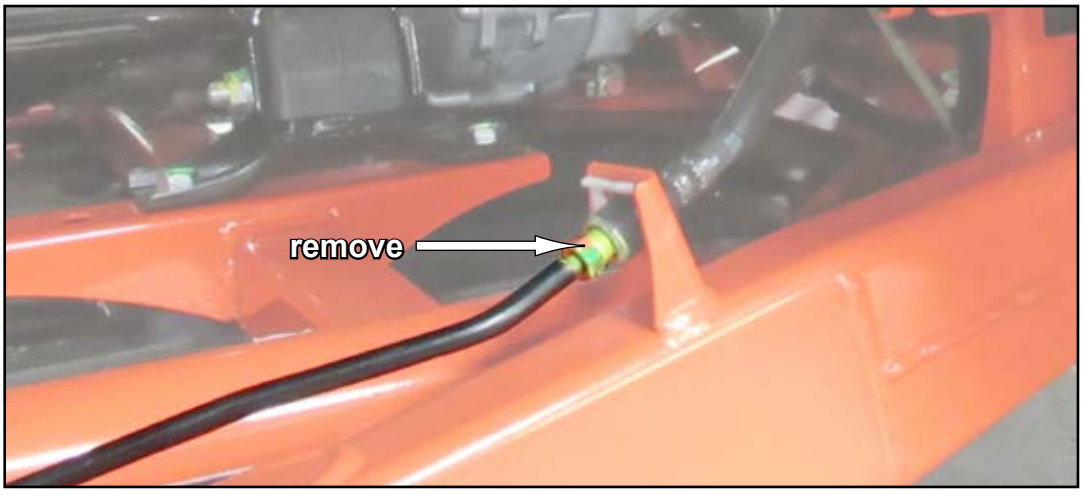

repeat for driver side

Use Lug Nut removed from machine to verify correct Wheel Stud installation.

Install provided Studs into Rotors (A)(U):

- See “Wheel Hub Bolt Patterns”.
- Note machines bolt pattern and lug size.
- Set aside when complete.



Front Rotor (U) is thinner than Rear Rotor (A).

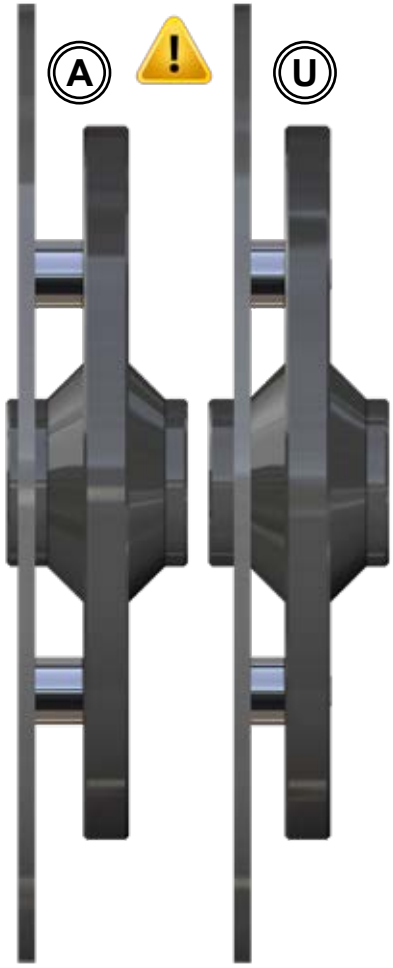





Wheel Hub Bolt Patterns

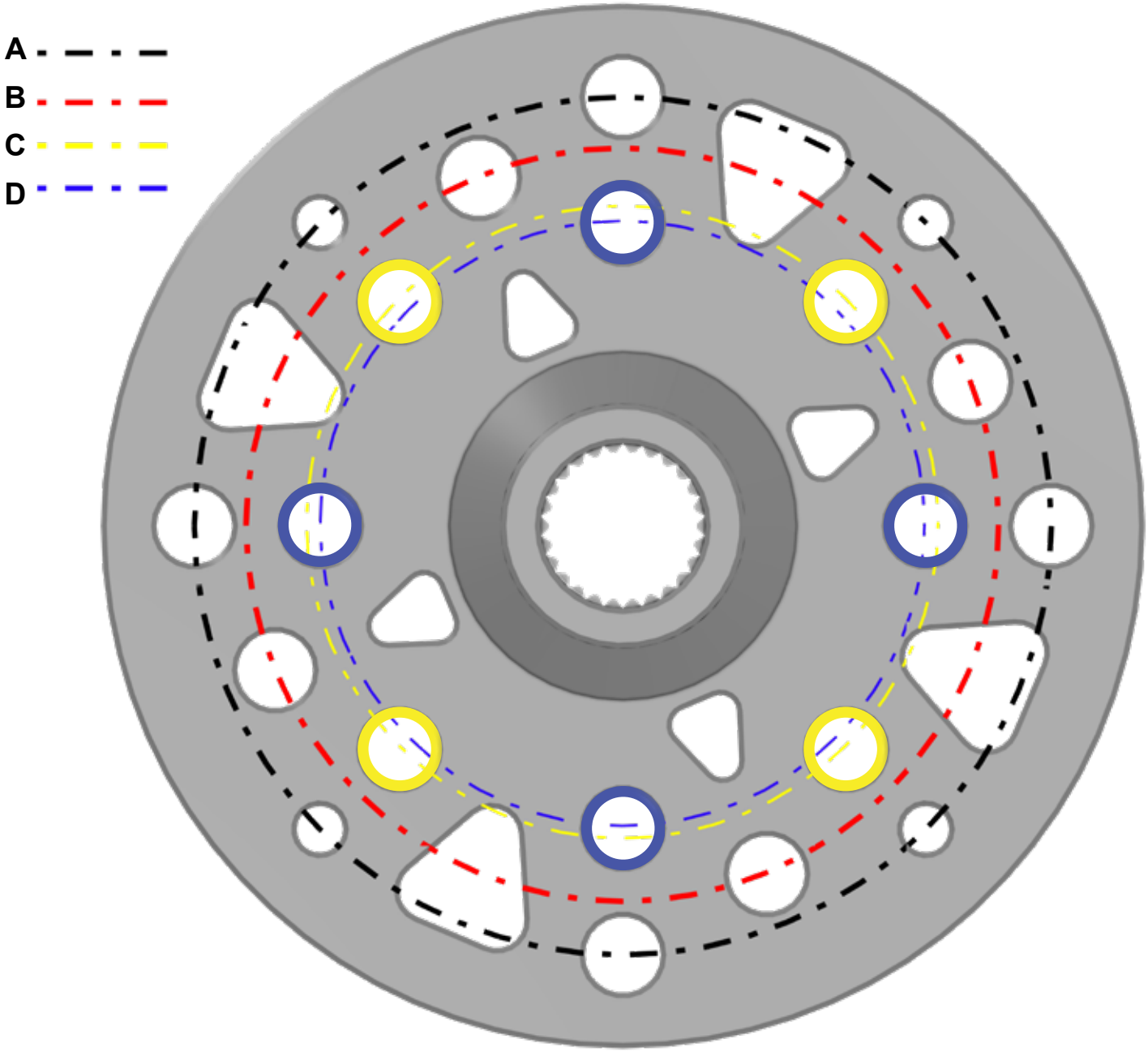

Pattern	Machine	Diameter
A	Polaris	156mm
B	Can-Am/Teryx4	137mm
C	Arctic Cat	115mm
D	Honda/Yamaha	110mm

Honda Talon machines will use Pattern B, Can-Am/Teryx4

Front: *do not tighten hardware completely unless noted.*

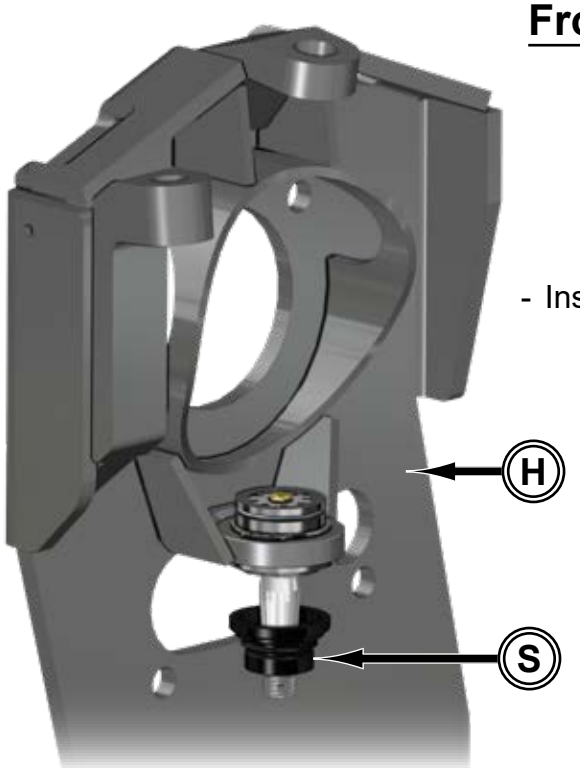

- Install provided Ring and Boot (S) to Ball Joint.

(secure Boot with provided adhesive)

- Secure Left Spindle (H) to Upper A-Arm with stock hardware.
- Secure to Lower A-Arm with components shown.
- Secure Tie Rod with stock hardware.



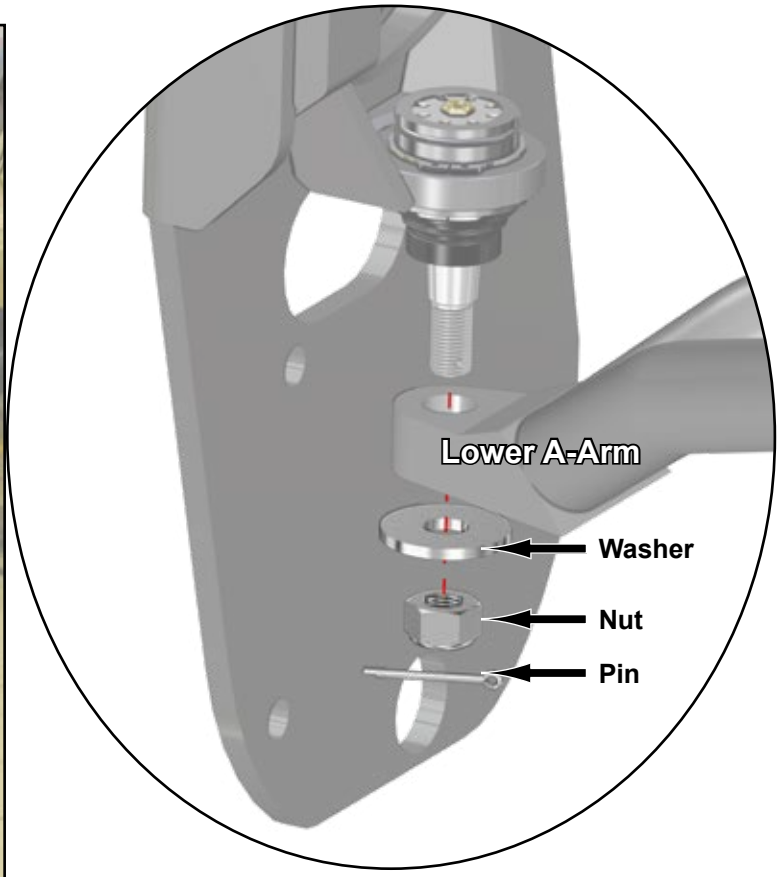

- Tighten all hardware completely.

Front continued:

- Secure Gear Box (B) and Front Caliper Mounting Bracket (P) to Left Spindle (H) with hardware shown.
- Secure stock Axle with Recessed Nut (D); use thread locker.
- Tighten all hardware completely.

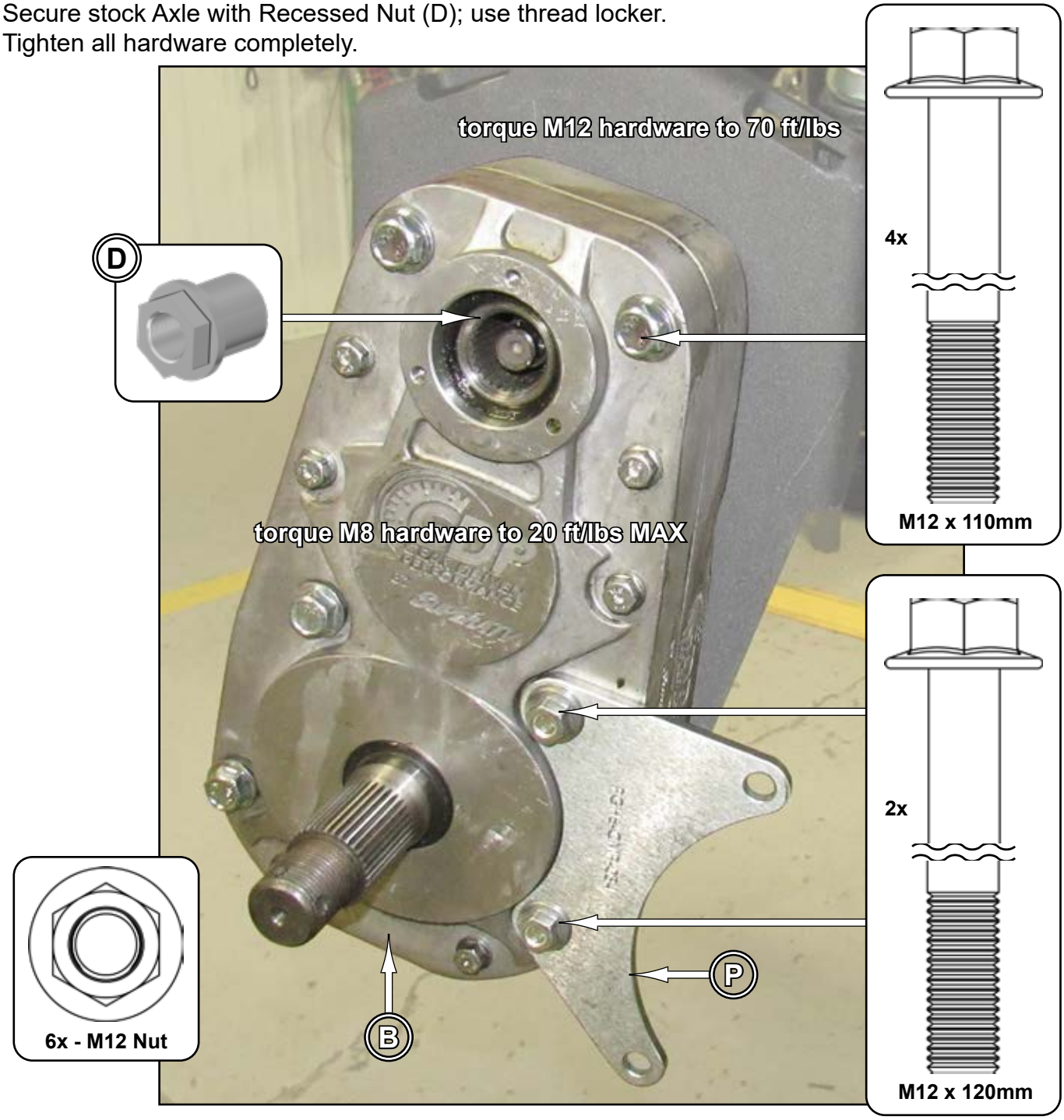

Front continued:

- Secure Gasket (C) and Cap (E) to Gear Box (B) with hardware shown.
- Secure Front Rotor (U) to Gear Box Axle Shaft with hardware shown.
- Tighten all hardware completely.

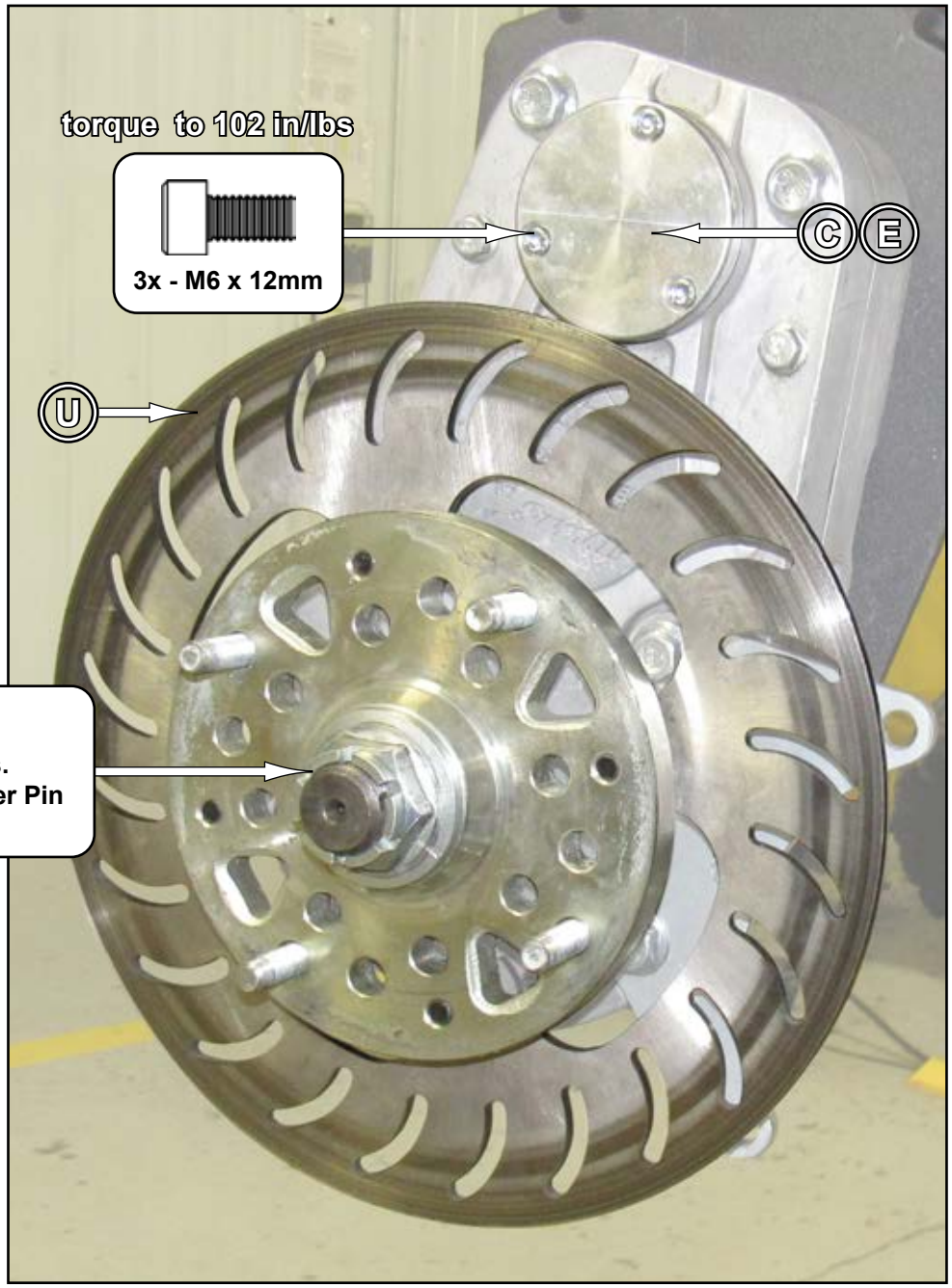

Castle Nut:

- **Torque to minimum 300 Ft/Lbs.**
- **Continue tightening until Cotter Pin can be installed.**

Front continued:

- Front Brake Calipers must be switched: passenger side to driver side. Bleeders must face up.
- Install stock Caliper to Front Caliper Mounting Bracket (P) with hardware shown.
- Install supplied Brake Line.
- Ensure that no binding occurs after Brake Line has been installed and secured.

(SuperATV A-Arms shown; see following page for stock A-Arms)

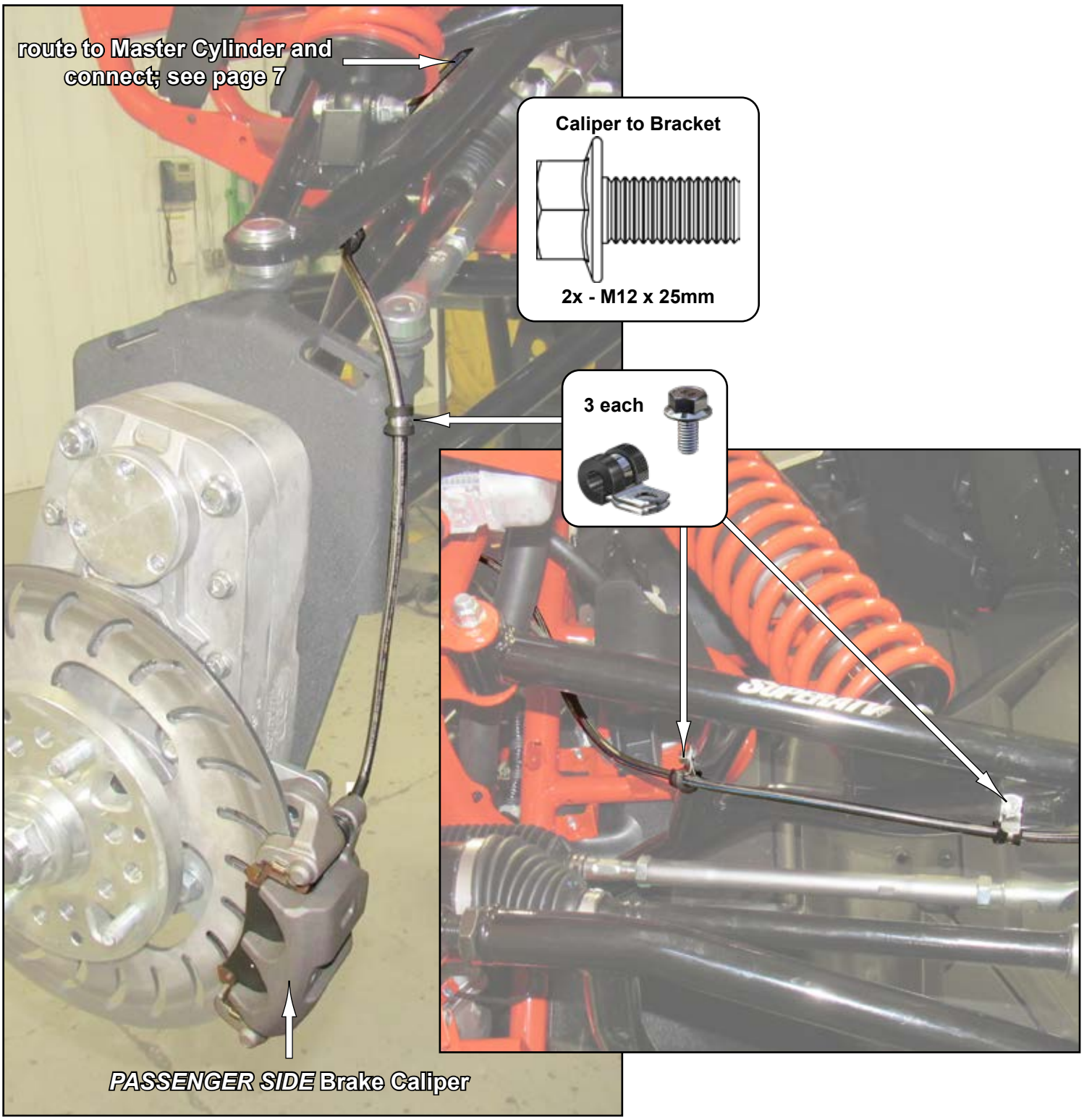

- Tighten hardware completely.
- Repeat steps for opposite side.

Stock A-Arms:

- Secure Brake Line to A-Arm in locations shown.

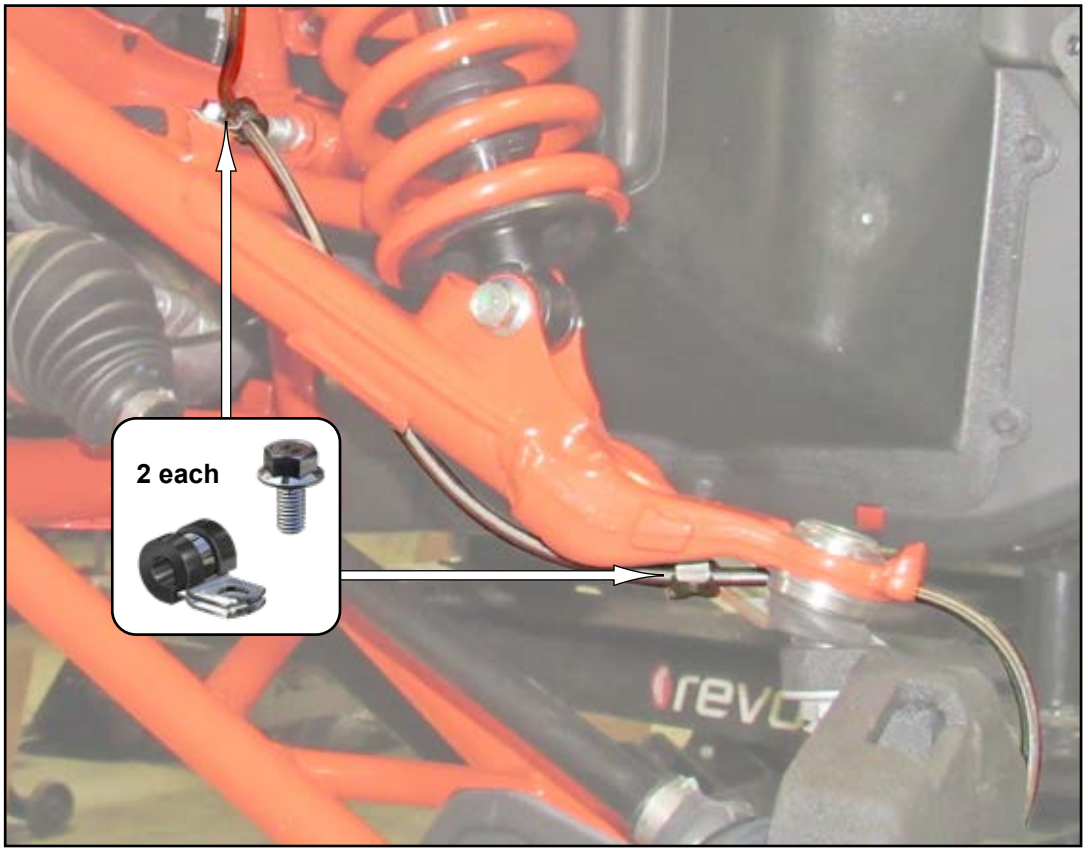

- In certain instances, interference may occur between Caliper and Rotor. Install provided CMP Spacer (V) between CMP and Gear Box.

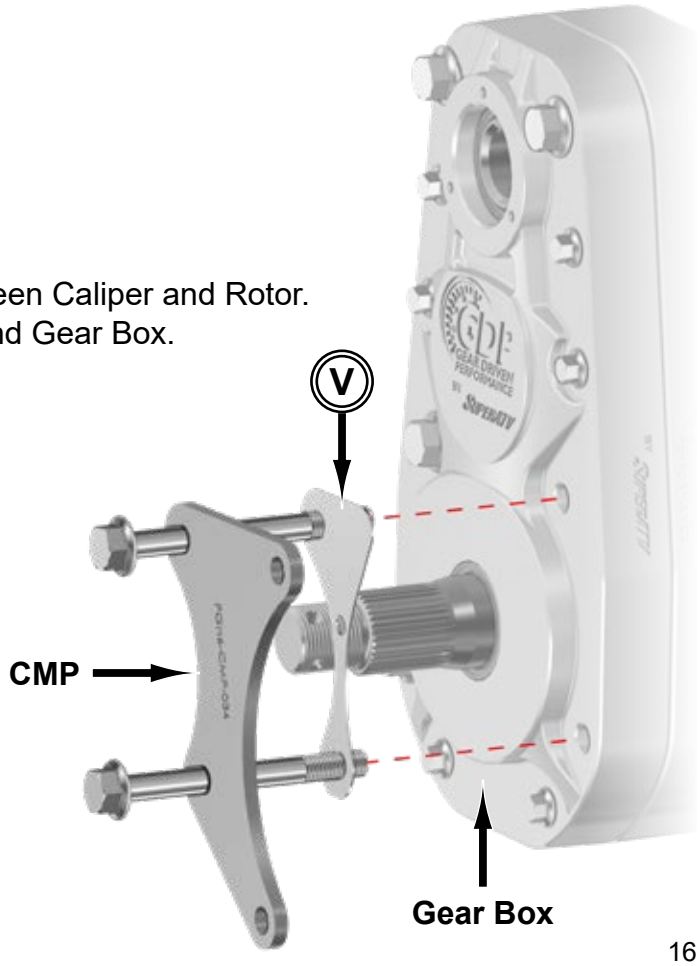

Rear: *do not tighten hardware completely unless noted.*

- Install Right Base Plate (R) and Right Bearing Carrier (L) with hardware shown.

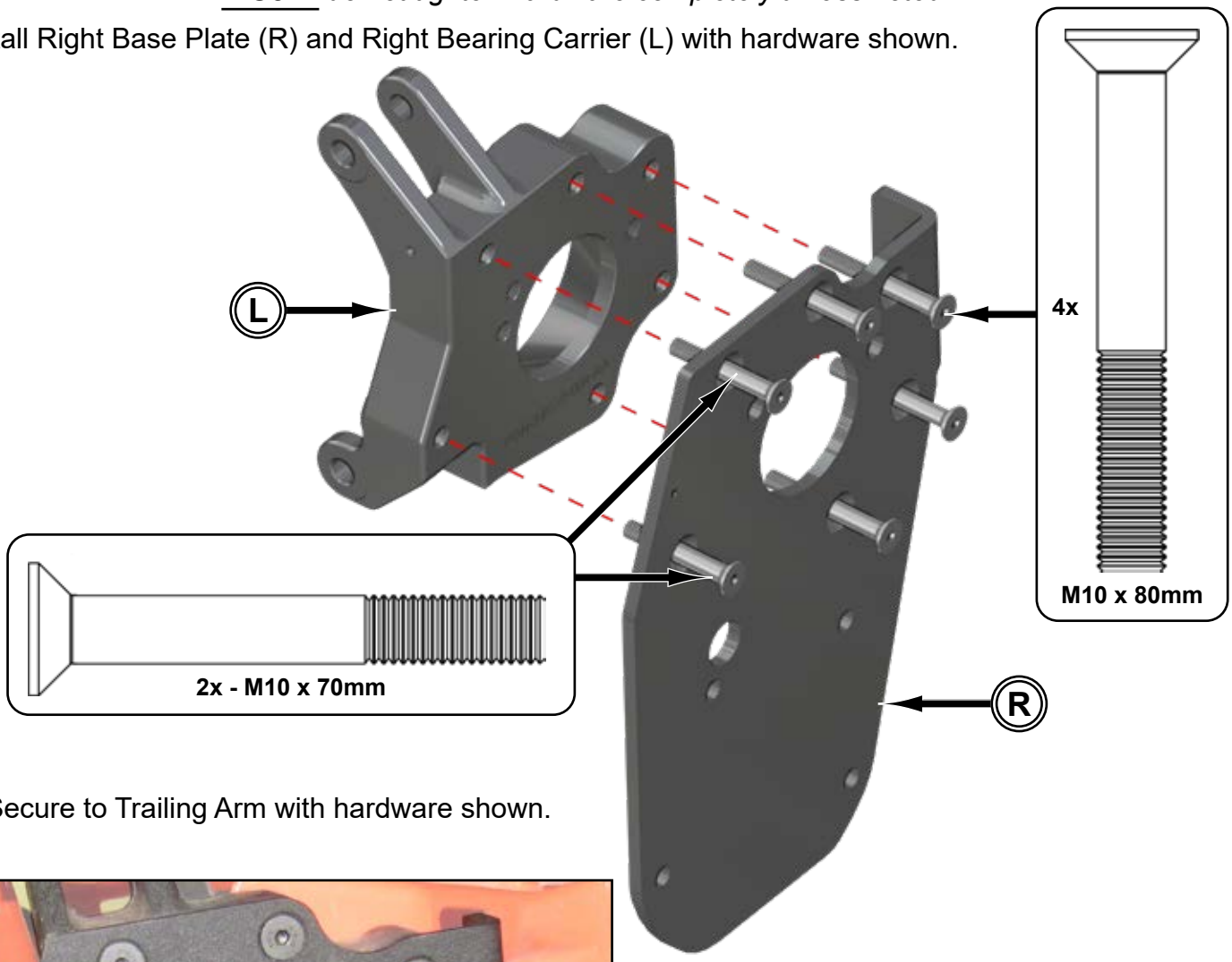

- Secure to Trailing Arm with hardware shown.



Rear continued:

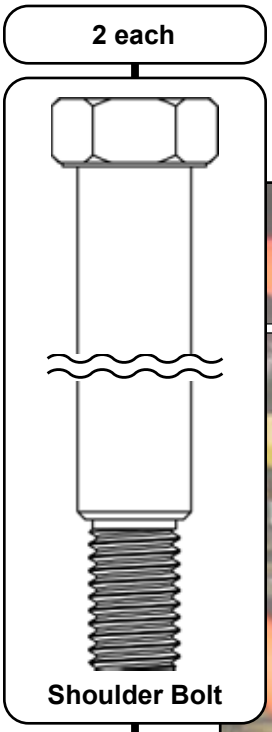

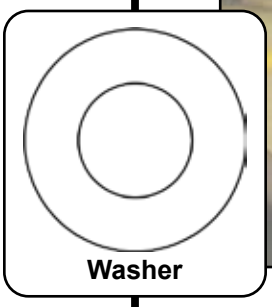

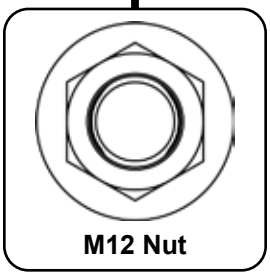

- Secure Radius Arms to Right Bearing Carrier (L) with hardware shown.

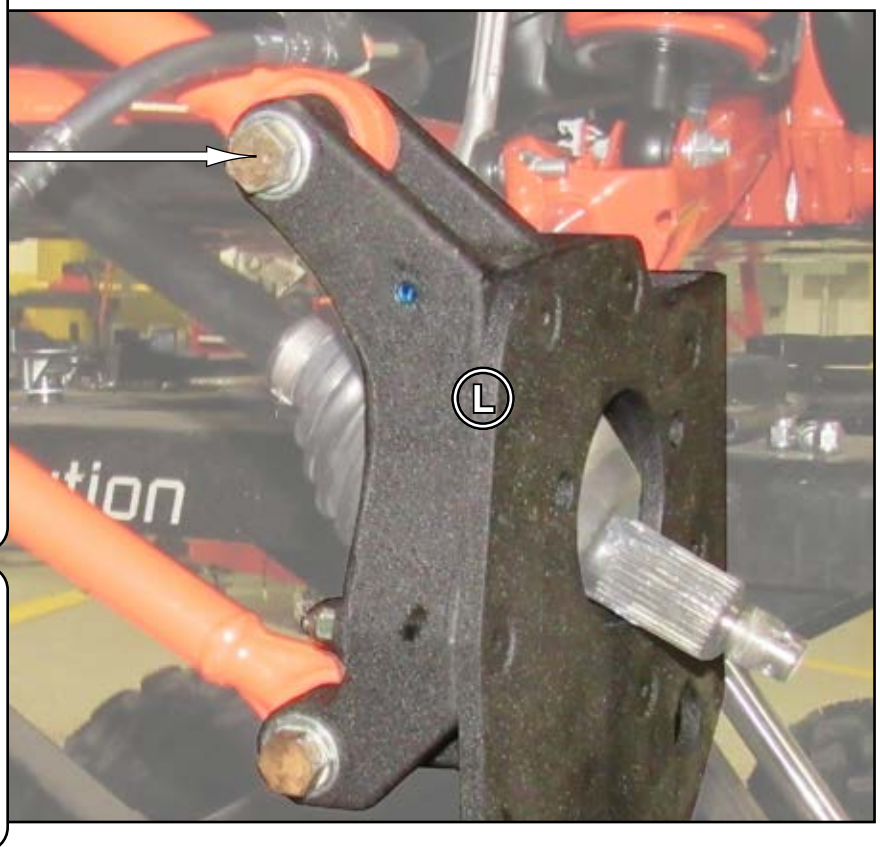

- Tighten all hardware completely.

Rear continued:

- Secure Gear Box (B) and Rear Caliper Mounting Bracket (G) to Right Carrier Bearing (L) with hardware shown.
- Secure stock Axle with Recessed Nut (D); use thread locker.
- Tighten all hardware completely.

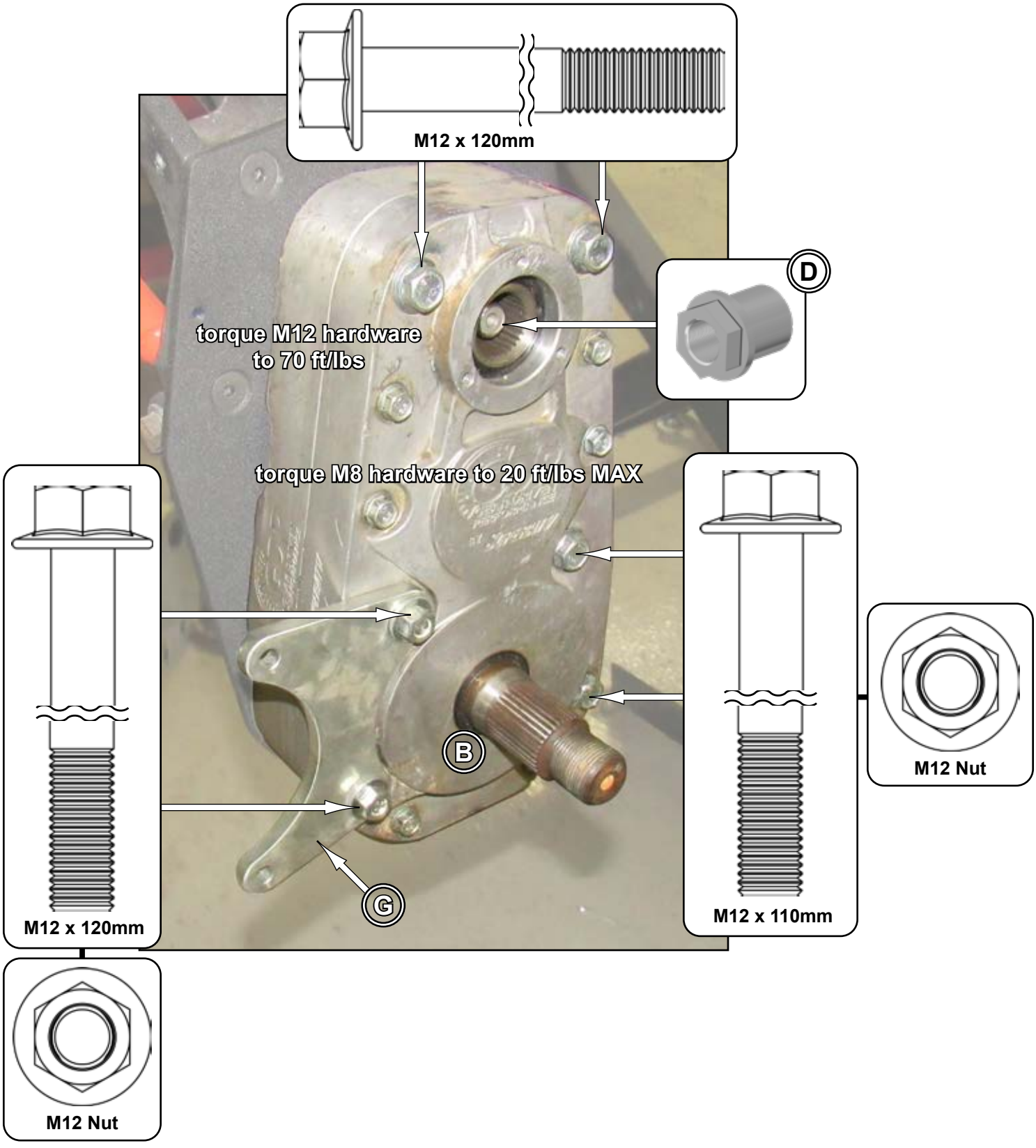

Rear continued:

- Secure Gasket (C) and Cap (E) to Gear Box (B) with hardware shown.
- Secure Rear Rotor (A) to Gear Box Axle Shaft with hardware shown.

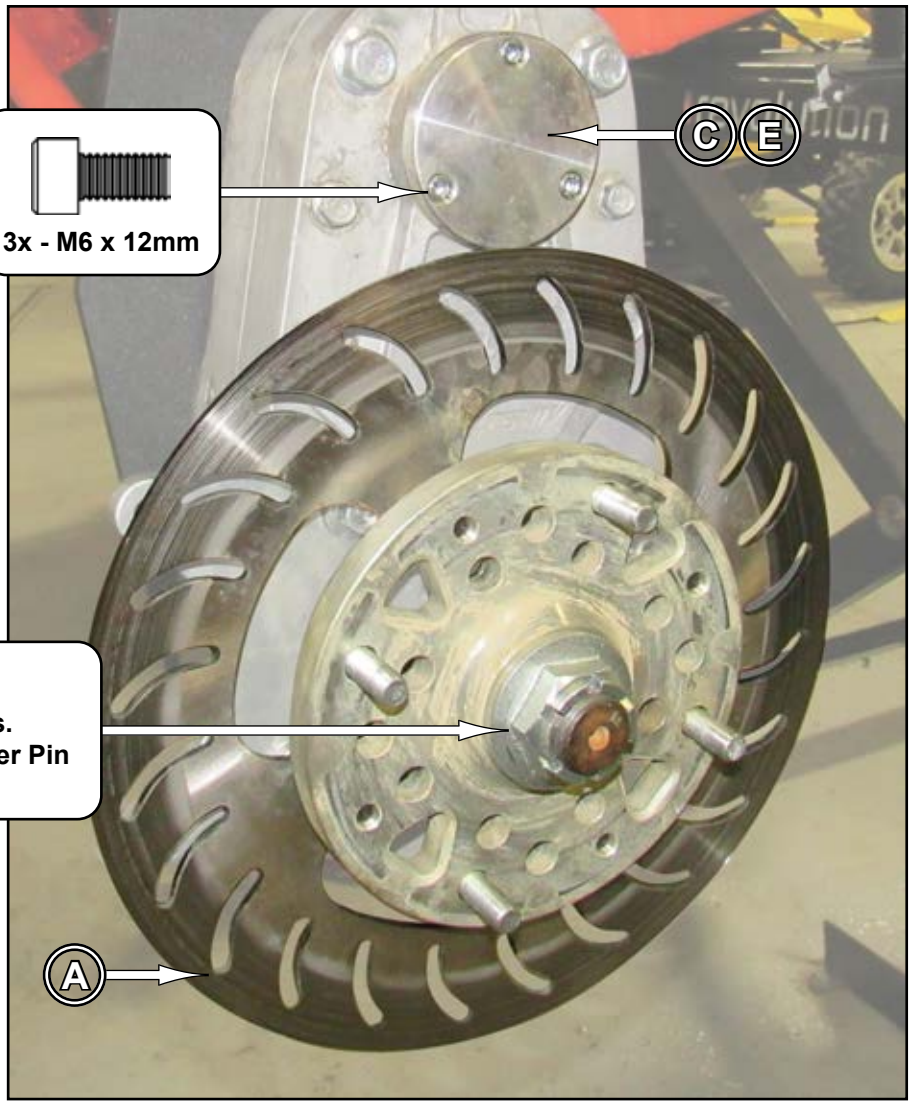

Castle Nut:

- **Torque to minimum 300 Ft/Lbs.**
- **Continue tightening until Cotter Pin can be installed.**

Rear continued:

- Install stock Caliper to Rear Caliper Mounting Bracket (G) with hardware shown.
- Install supplied Brake Line.
- Ensure that no binding occurs after Brake Line has been installed and secured.

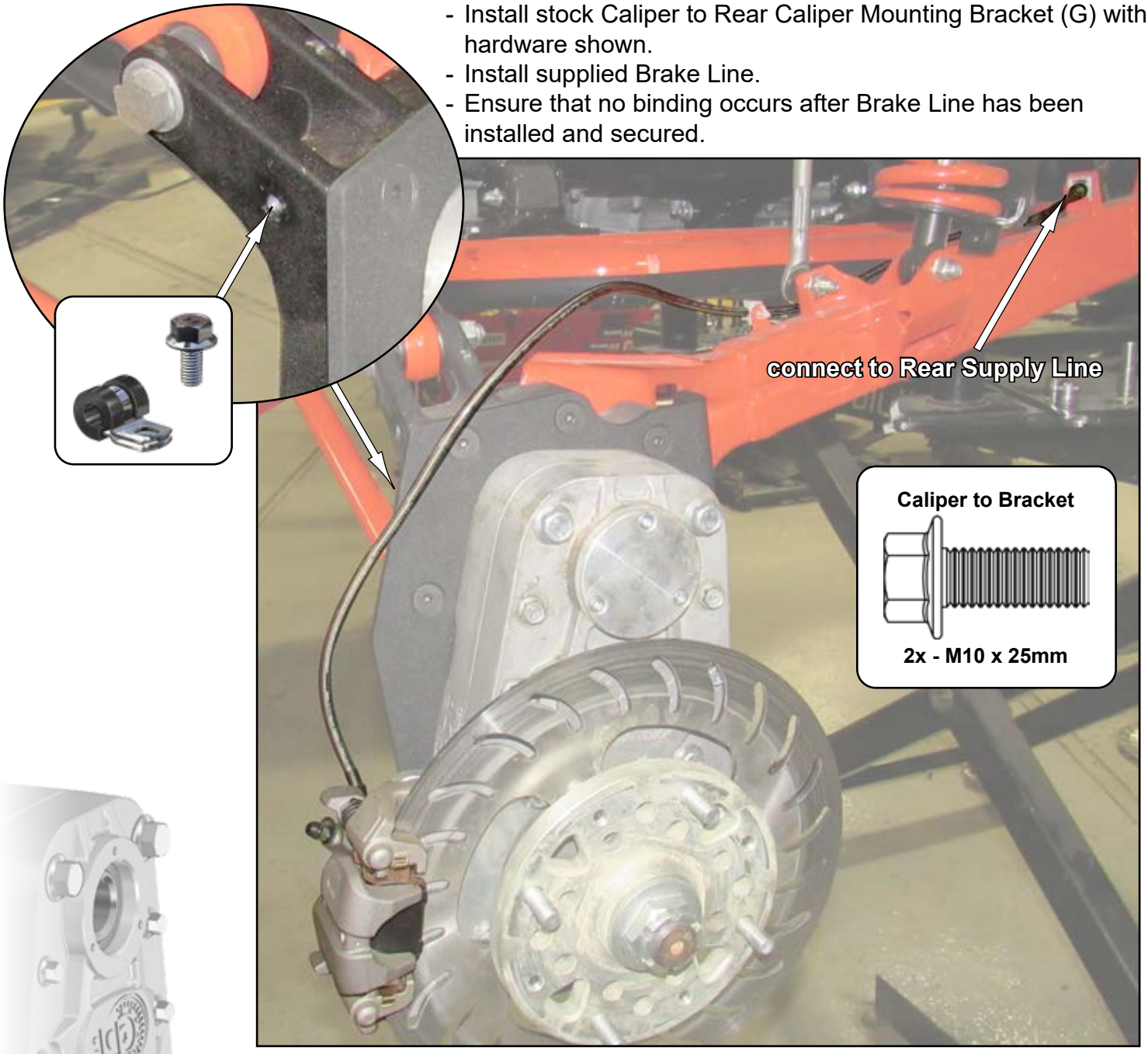

- Tighten hardware completely. Repeat steps for opposite side.

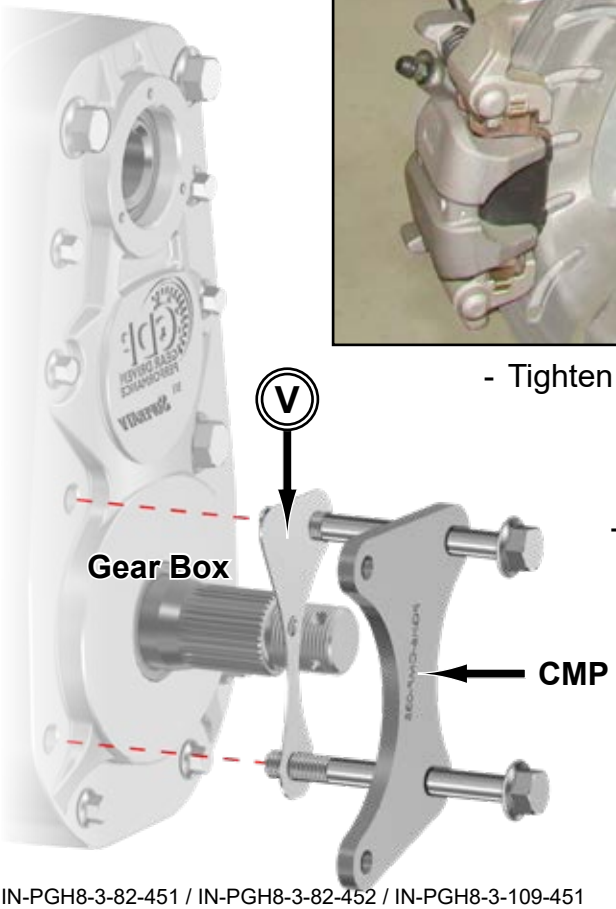

- In certain instances, interference may occur between Caliper and Rotor. Install provided CMP Spacer (V) between CMP and Gear Box.

- Attach a hose to a funnel and fill each Gear Box with SuperATV Portal Blood.
- Fill up to fill holes.





- Install Drain Plugs to Gear Box.

Torque to 10 ft/lbs



2x - Drain Plug