2753 Michigan Road • Madison, Indiana 47250 • 855-743-3427

INSTALLATION INSTRUCTIONS
Portal Gear Hubs - 8”
Can-Am Maverick X3

A

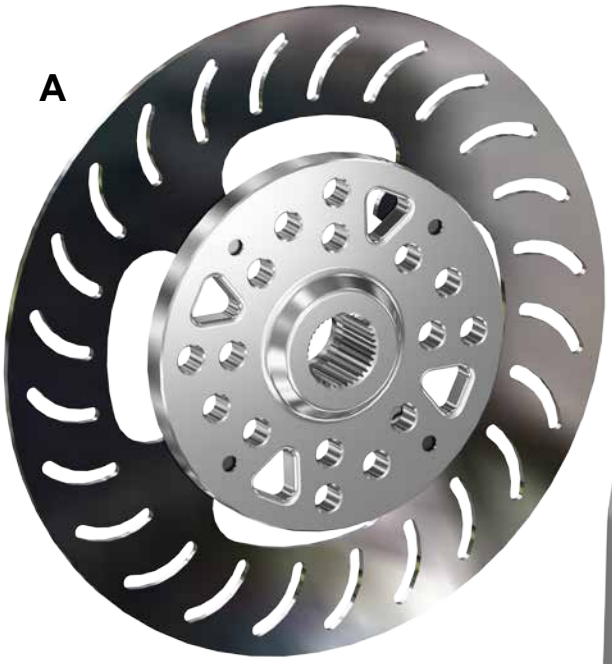

B



Item	Description
A	Rotor x 4
B	Gear Box x 4
C	Cap x 4
D	Gasket x 4
R	Recessed Nut x 4

C



D



R



(Kit Contents continue on following pages)

WHEN FILLING GEAR BOX USE ONLY 80W-90 GEAR OIL. USING GREASE WILL CAUSE FAILURE OF GEARS AND BEARINGS. USING GREASE WILL VOID THE WARRANTY.

Liability Statement

SuperATV's® products are designed to best fit user's ATV/UTV under stock conditions. Adding, modifying, or fabricating any factory or aftermarket parts will void any warranty provided by SuperATV® and is not recommended. SuperATV's® products could interfere with other aftermarket accessories. If user has aftermarket products on machine, contact SuperATV® to verify that they will work together.

Although SuperATV® has thousands of satisfied customers, user should be aware that installing lift kits, long travel, or suspension kits, tires, etc. will change the ride of machine and may increase maintenance and part wear. Operating any off-road machine while, or after, consuming alcohol and/or drugs increases risk of bodily harm or death. No warranty or representation is made as to this product's ability to protect user from severe injury or death. SuperATV® urges operators and occupants to wear a helmet and appropriate riding gear at all times.

By purchasing and installing SuperATV® products, user agrees that should damages occur, SuperATV® will not be held responsible for loss of time, use, labor fees, replacement parts, or freight charges. SuperATV®, nor any 3rd party, will not be held responsible for any direct, indirect, incidental, special, or consequential damages that result from any product purchased from SuperATV®. The total liability of seller to user for all damages, losses, and causes of action, if any, shall not exceed the total purchase price paid for the product that gave rise to the claim.

SuperATV® will warranty only parts provided by SuperATV®. Any damage or problems with OEM housings, bearings, seals, or other manufacturers' products will not be covered by SuperATV®. SuperATV® parts and products are not warrantied if item was not installed properly, misused, or modified.

Installing, adding, modifying, or fabricating any factory or aftermarket product to your ATV/UTV may violate certain local, state, and federal laws. Be advised that laws vary depending on town, city, county, state, etc. Use of certain products on public streets, roads, or highways may be in violation law. The Buyer is solely and exclusively legally and personally responsible for any violation of the law by the installation or use of the product. You must abide by all local, state, and federal laws, including but not limited to vehicle safety, traffic laws, and ordinances. It is your responsibility to know the laws and how they apply to you.

The Buyer is responsible to fully understand the capability and limitations of his/her vehicle according to manufacturer specifications, warnings and instructions and agrees to hold SuperATV® harmless from any damage resulting from failure to adhere to such specifications, warnings and/ or instructions. The Buyer is also responsible to obey all applicable federal, state, and local laws and ordinances when operating his/her vehicle while using this product, and the Buyer agrees to hold SuperATV® harmless from any violation thereof.

Need help with your installation?

sales@superatv.com

www.superatv.com

1-855-743-3427

8:00am - 8:00pm EST M-Th
8:00am - 7:00pm EST Friday
9:00am - 2:00pm EST Saturday

Read instructions and view illustrations before beginning.

Thank You For Choosing SUPERATV.COM®

© 2018 SuperATV.com® All Rights Reserved.

(Kit Contents continued)

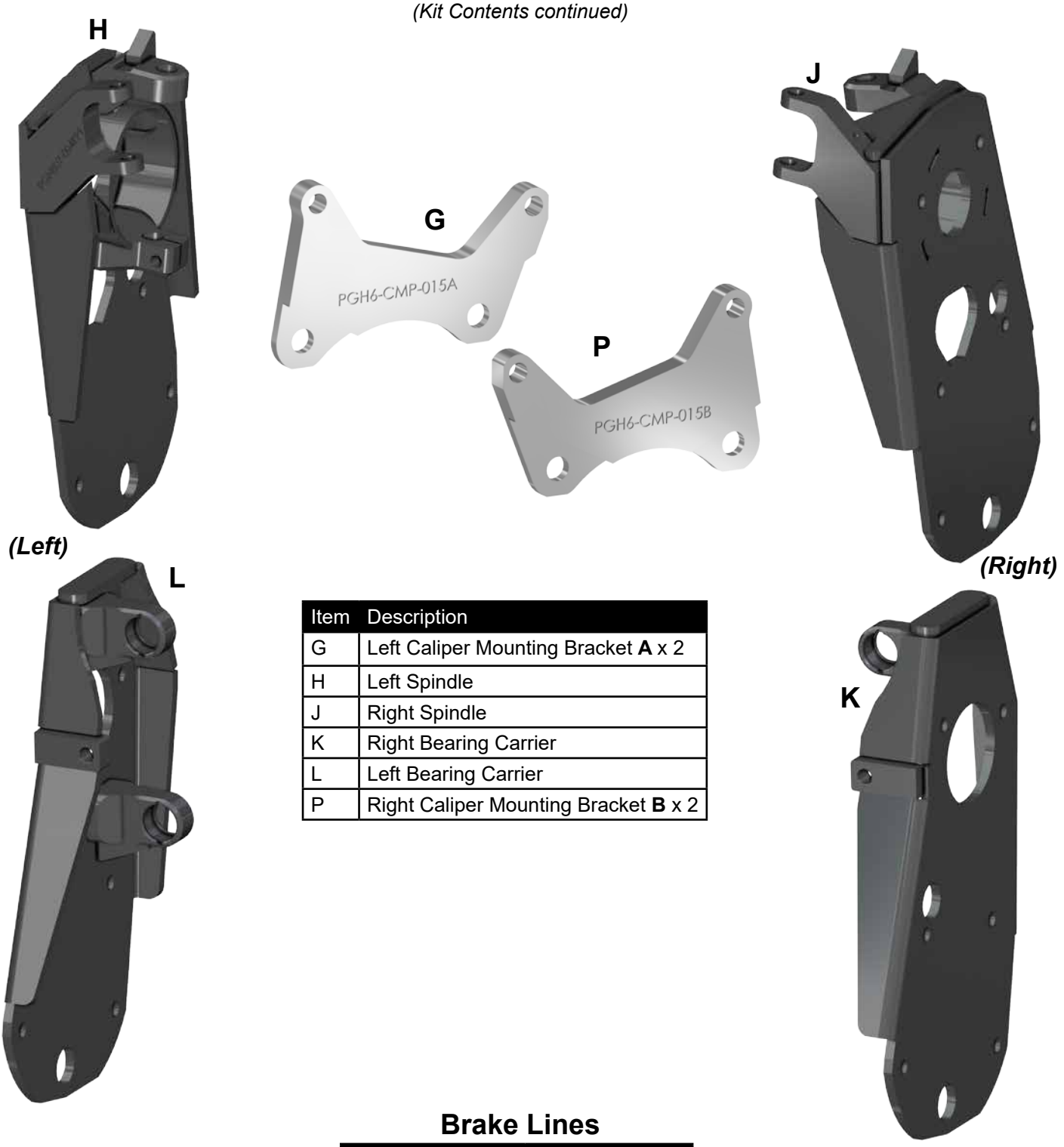

Item	Description
G	Left Caliper Mounting Bracket **A** x 2
H	Left Spindle
J	Right Spindle
K	Right Bearing Carrier
L	Left Bearing Carrier
P	Right Caliper Mounting Bracket **B** x 2

Brake Lines

Location	Length (Approx)
Front Calipers	55”
Front Supply	19-1/4”
Rear Calipers	96”
Rear Supply	28”

PGH8-7-72-452 models use BL062 (68” long) Rear Supply

(Kit Contents continued)

12x 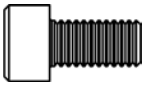 **M6-1.0 x 12mm Lg. SHCS**

4x 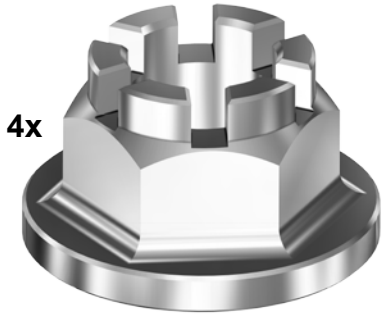

Castle Nut

24x 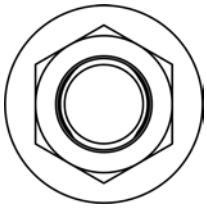 **M12 Nylock Nut**

12x  **Drain Plug**

8x 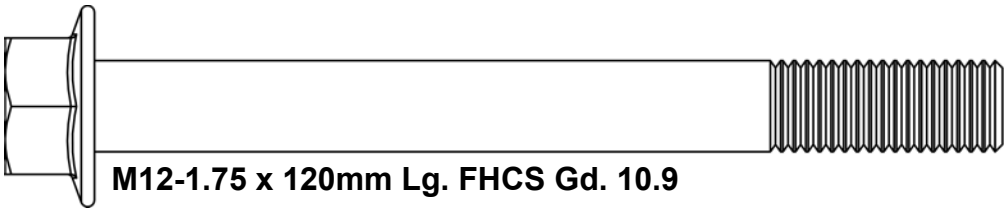

M12-1.75 x 120mm Lg. FHCS Gd. 10.9

Threadlock, 2mL

16x 

M12-1.75 x 110mm Lg. FHCS Gd. 10.9

4x 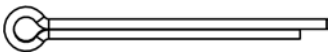 **Cotter Pin**

Machines with SuperATV Heavy Duty Tie Rod Ends must use provided hardware shown when securing to Steering Arms.

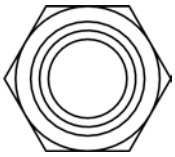 **M12 Nylock Nut**

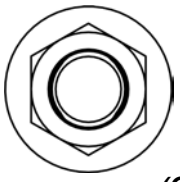 **M10 Nylock Nut**

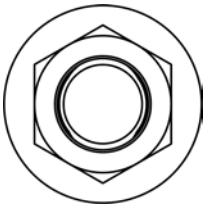 **M12 Nylock Nut**

(Qty. 2 each)

Wheel Stud Kit (16 each)

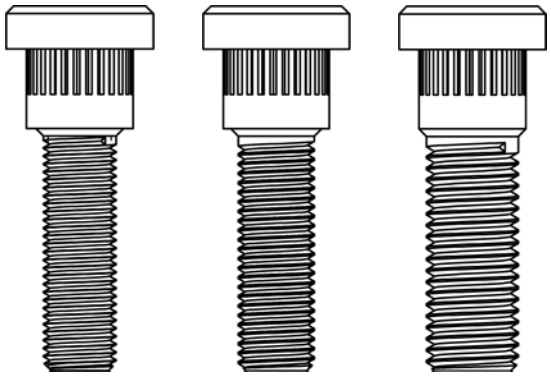

3/8-24 **M10-1.25** **M12-1.50**



Heim Tool

(Kit Contents continued)

16x 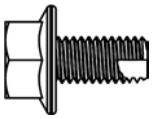 **M6-1.0 x 12mm Lg. FHCS (self tapping)**



16x - Brake Line Clip



2x - T-Fitting

2x 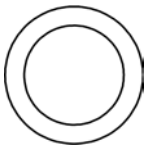 **T-Fitting Spacer**

1x  **Sheet Metal Screw**

1x 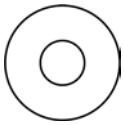 **M5 Washer**

1x 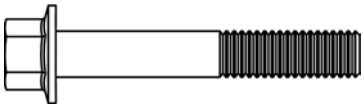 **M6-1.0 x 40mm Lg. FHCS**

Read ALL instructions prior to operating Portal Gear Hubs. Injury to personnel, portal gear hub, and/or machine failure may be caused by improper installation, maintenance or operation.

• It is dangerous to get under a jacked-up vehicle. The vehicle could slip off the jack and fall on you. You could be crushed. Never place any part of your body under a vehicle that is on a jack. Never start or run the engine while the vehicle is on a jack. If you need to get under a raised vehicle, take it to a service center where it can be raised on a lift.

• Hot oil can cause severe burns. Use extreme care when removing lubrication plugs and when working close to a unit that has been in operation.

• Check lube level between scheduled lube changes to insure that proper lube level is maintained. Inspect the tightness of mounting bolts, excessive heating, or any unusual noise or vibration.

• Serious personal injury may occur as a result of improperly performed maintenance, adjustments or repairs.

• Always be extremely careful when working on the portal gear hub. Always follow commonly accepted safety practices and general common sense. Never risk personal injury.

• Do not operate the portal gear hub without proper lube and correct amount.

For safe operation and to maintain the unit warranty, when changing a provided fastener for any reason, it becomes the responsibility of the person making the change to properly account for fastener grade, thread engagement, load, tightening torque and the means of torque retention.

• Mounting bolts should be periodically checked to ensure that the unit is firmly anchored for proper operation.

• These instructions are not intended to cover all details or variations in equipment, nor provide for every possible contingency to be met in connection with selection, installation, operation, and maintenance.

Should further information be desired or should particular problems arise which are not covered sufficiently for the Buyer's purpose, the matter should be referred to SuperATV®.

In the event of the resale of any of the goods, in whatever form, Resellers/Buyers will include the following language in a conspicuous place and in a conspicuous manner in a written agreement covering such sale:

The manufacturer makes no warranties or representations, express or implied, by operation of law or otherwise, as to the merchantability or fitness for a particular purpose of the goods sold hereunder. Buyer acknowledges that it alone has determined that the goods purchased hereunder will suitably meet the requirements of their intended use. In no event will the manufacturer be liable for consequential, incidental or other damages. Even if the repair or replacement remedy shall be deemed to have failed of its essential purpose under Section 2-719 of the Uniform Commercial Code, the manufacturer shall have no liability to Buyer for consequential damages.

Resellers/Buyers agree to also include this entire document including the danger, warnings and cautions above in a conspicuous place and in a conspicuous manner in writing to instruct users on the safe usage of the product.

install Drain Plugs to each Gear Box.

Drain Plug Torque to 10 ft/lbs



3x - Drain Plug

DO NOT USE IMPACT WRENCH WHEN INSTALLING ANY HARDWARE INTO HOUSING

Use Lug Nut removed from machine to verify correct Wheel Stud installation.

Install provided Studs into Rotors (A):
- See “Wheel Hub Bolt Patterns”.
- Note machines bolt pattern and lug size.
- Set Rotors (A) aside when complete.



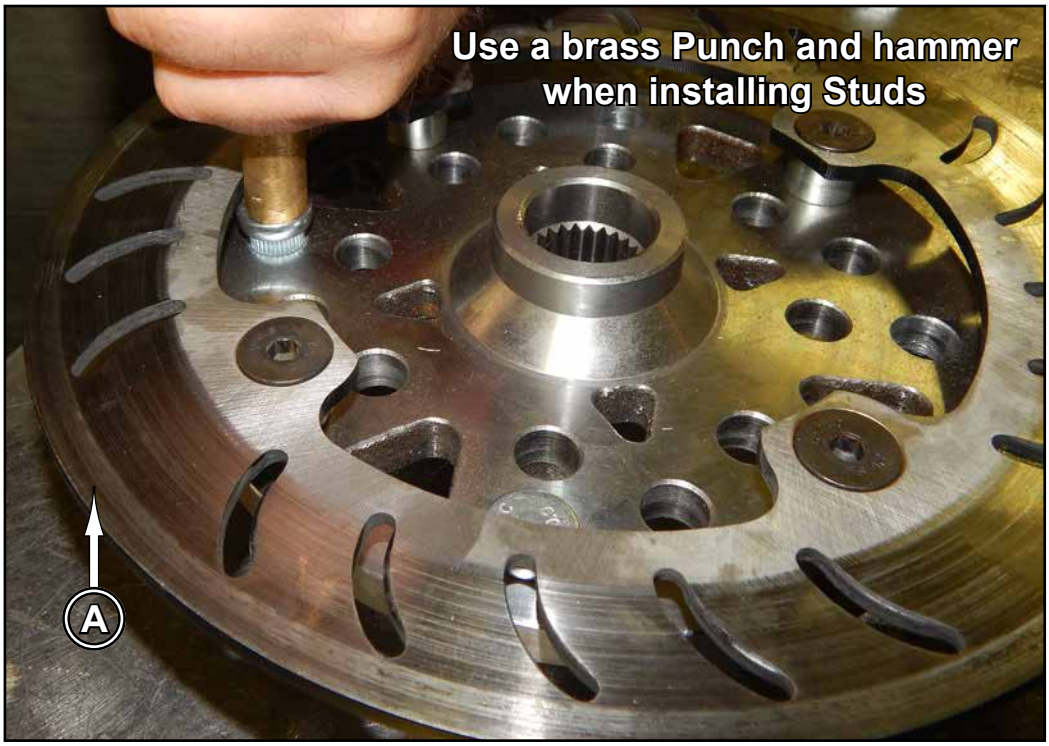



Wheel Hub Bolt Patterns

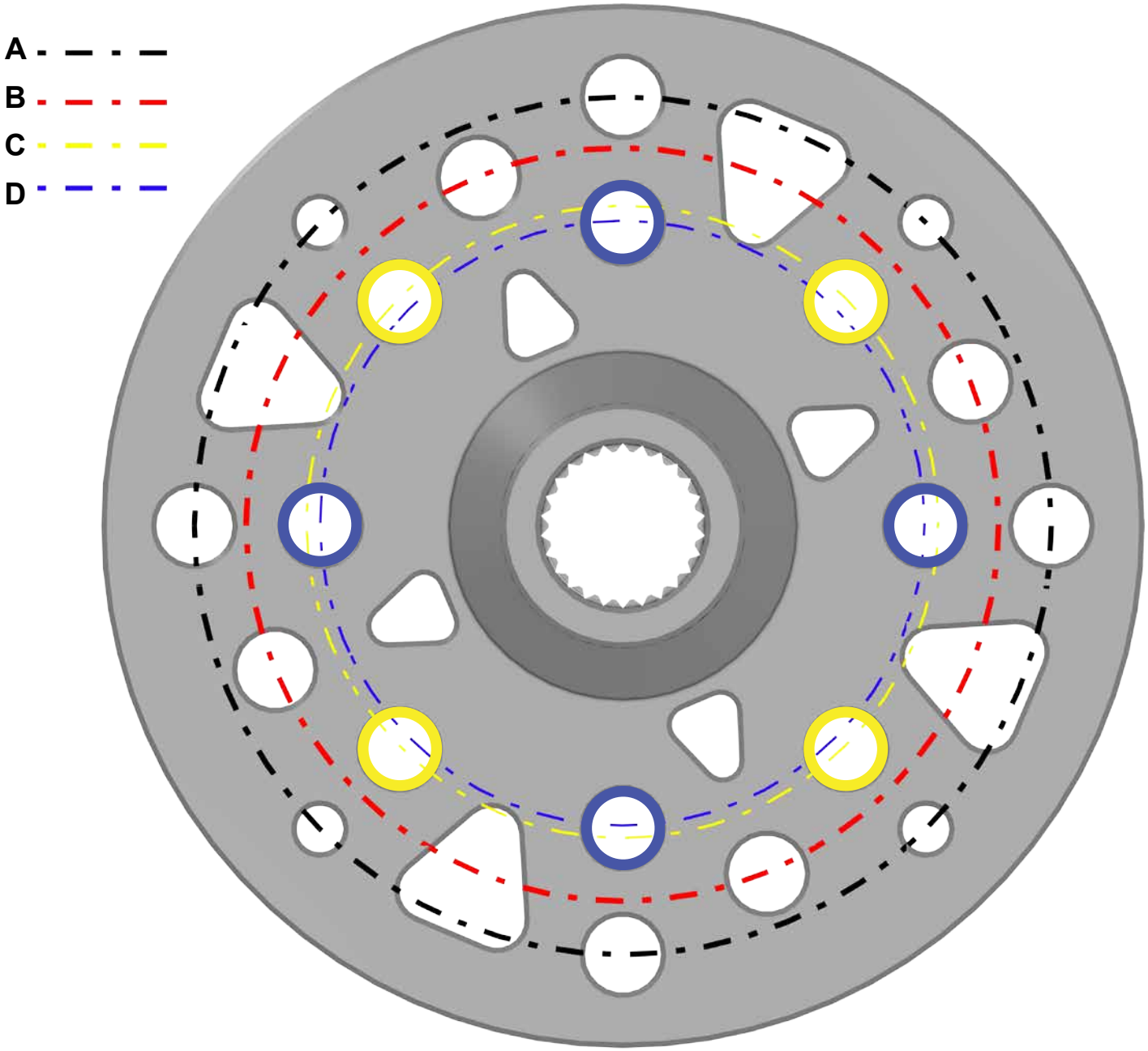

Pattern	Machine	Diameter
A	Polaris	156mm
B	Can-Am/Teryx4	137mm
C	Arctic Cat	115mm
D	Honda/Yamaha	110mm

Front Components Removal: *Keep all components removed from machine.*



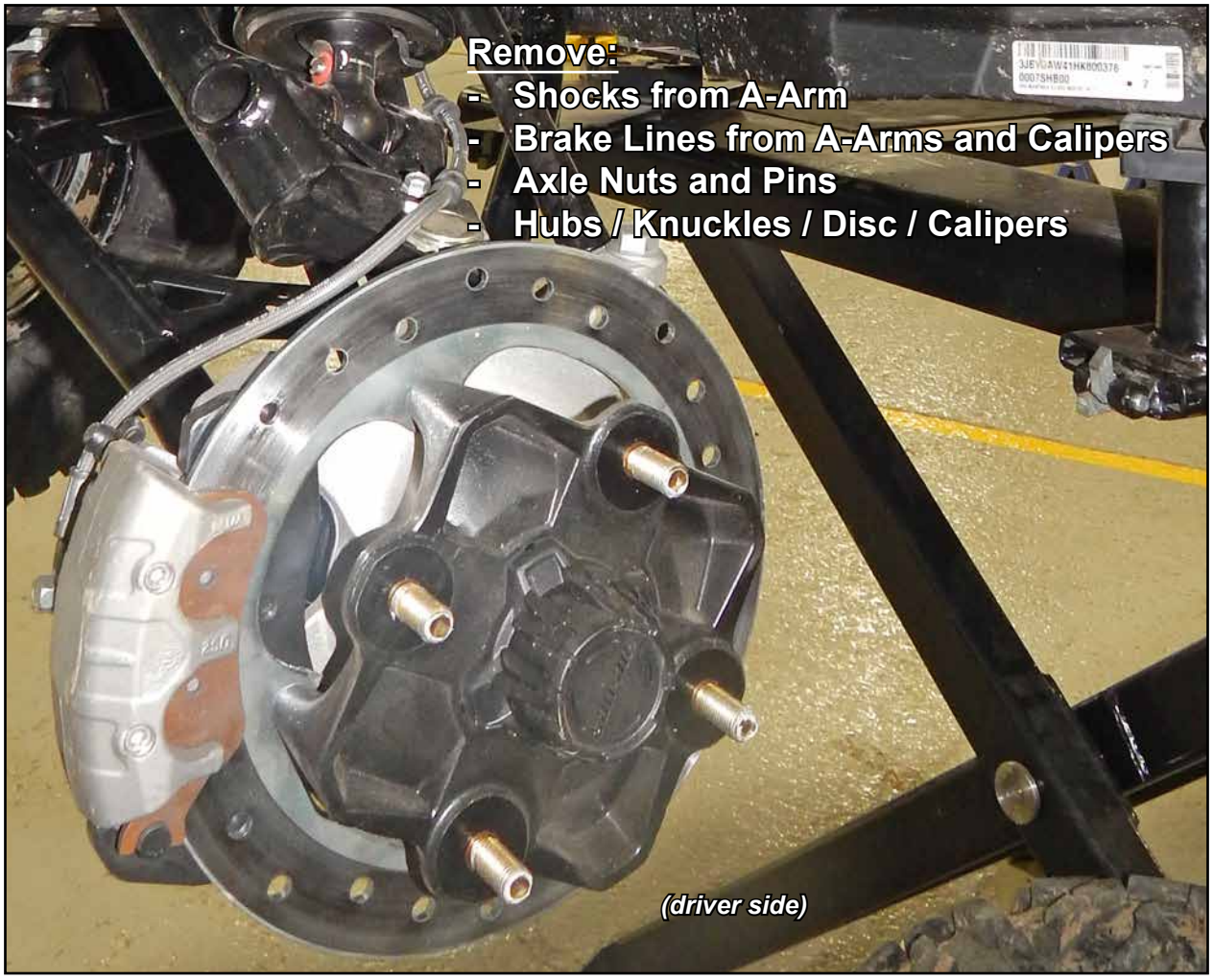

Rear Components Removal: *Keep all components removed from machine.*

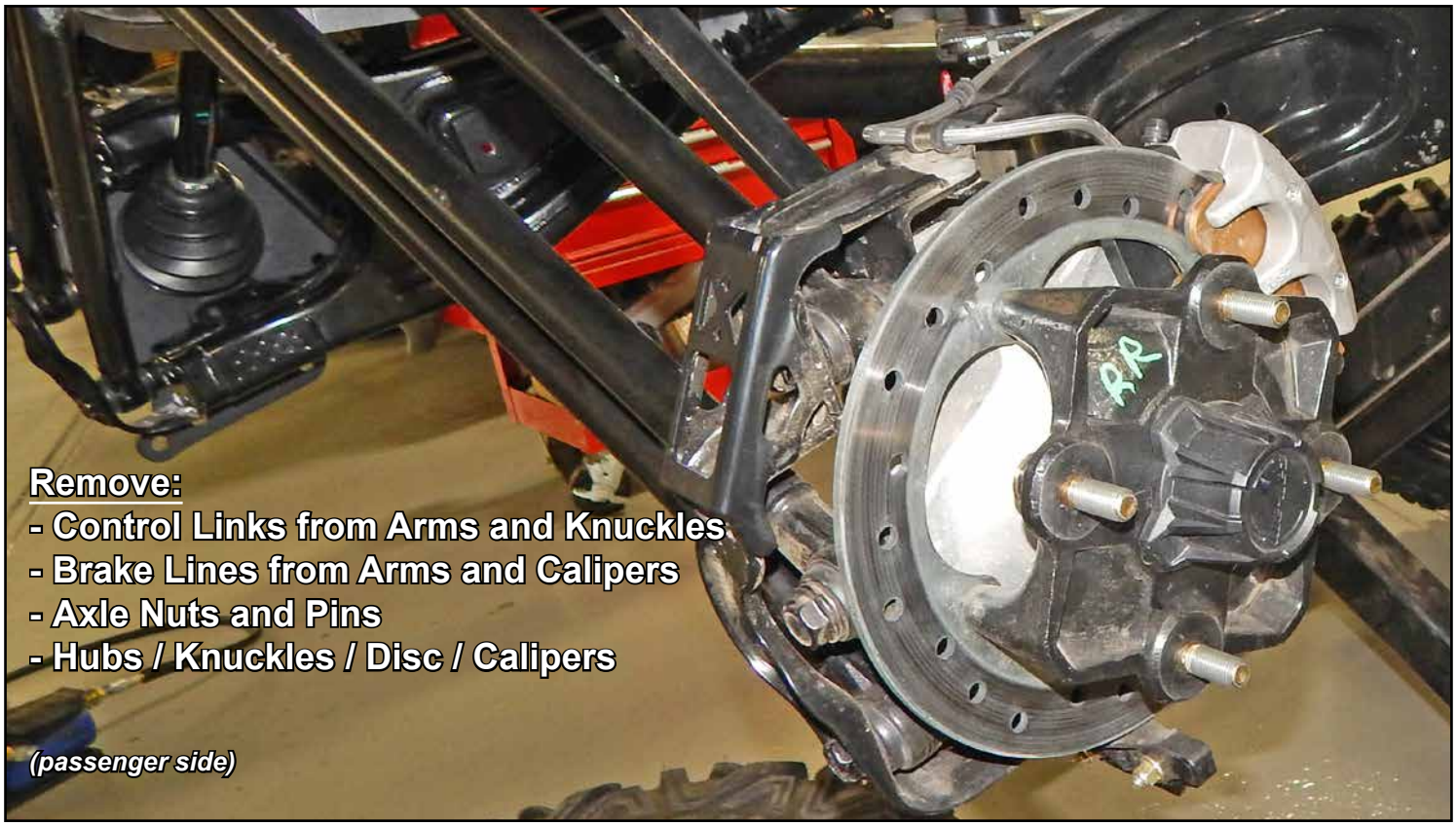



Rear Brake Lines:

Remove components shown on following pages.

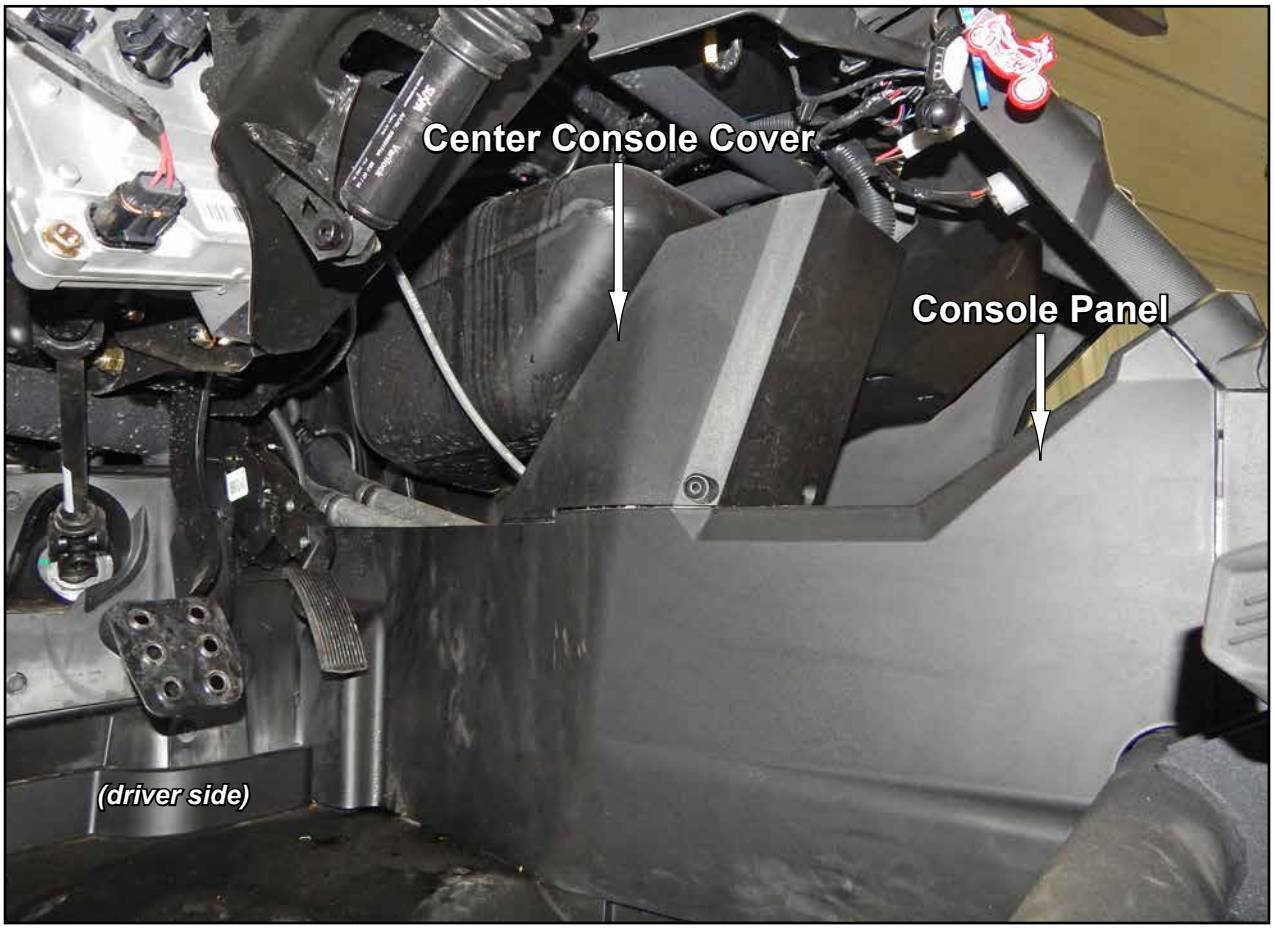

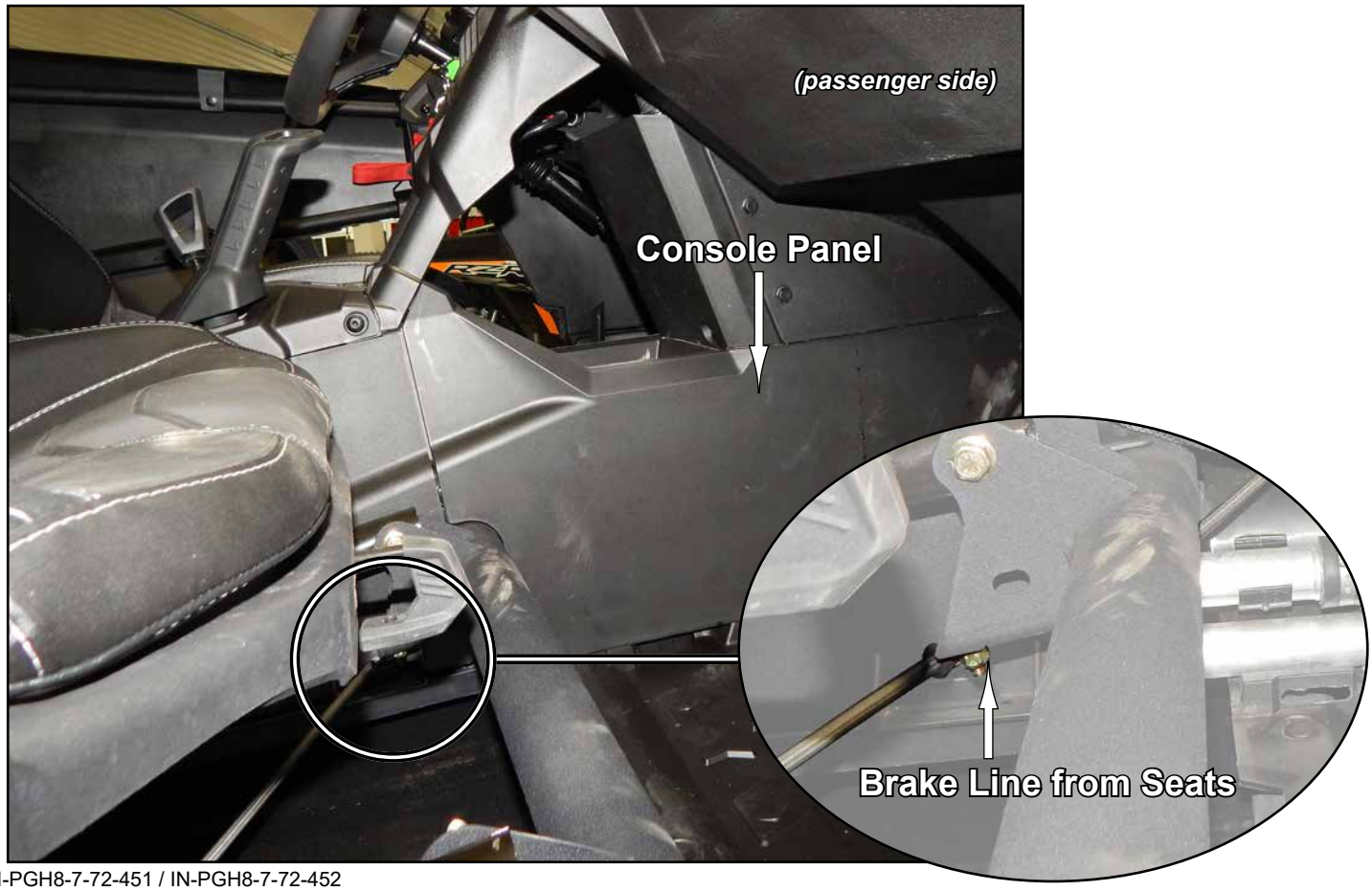

Rear Brake Lines continued:

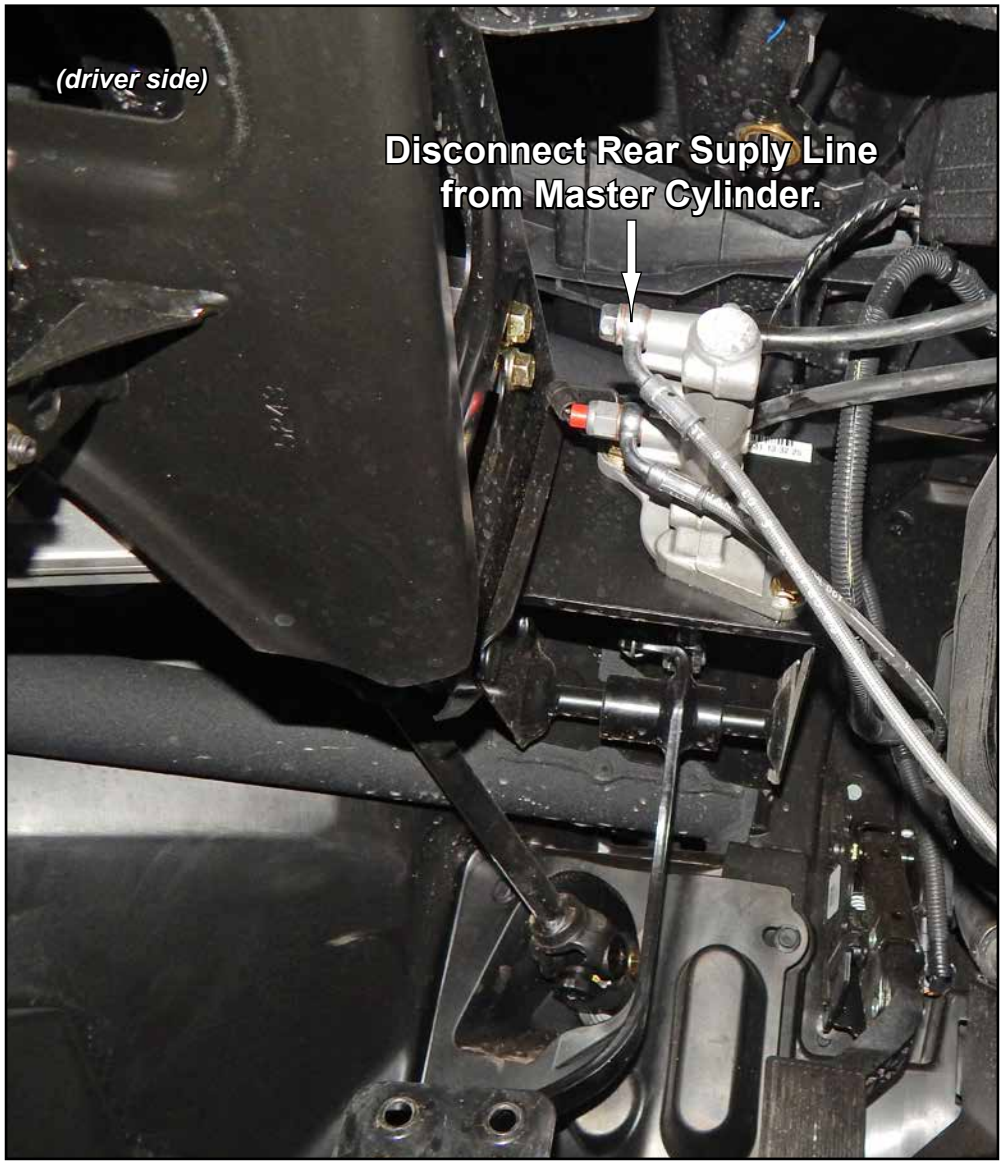



Rear Brake Lines continued:



- Pull Rear Brake Lines from machine.

Front: *do not tighten hardware completely unless noted.*

- Secure Left Spindle (H) to A-Arms with stock hardware.





- Secure Tie Rod to Left Spindle (H) with stock hardware.





If machine has SuperATV Heavy Duty Tie Rod Ends see page 3 for correct hardware.

Front continued:

- Secure Gear Box (B) and Front Caliper Mounting Bracket (G) to Left Spindle (H) with hardware shown.
- Secure stock Axle with Recessed Nut (R); use thread locker.

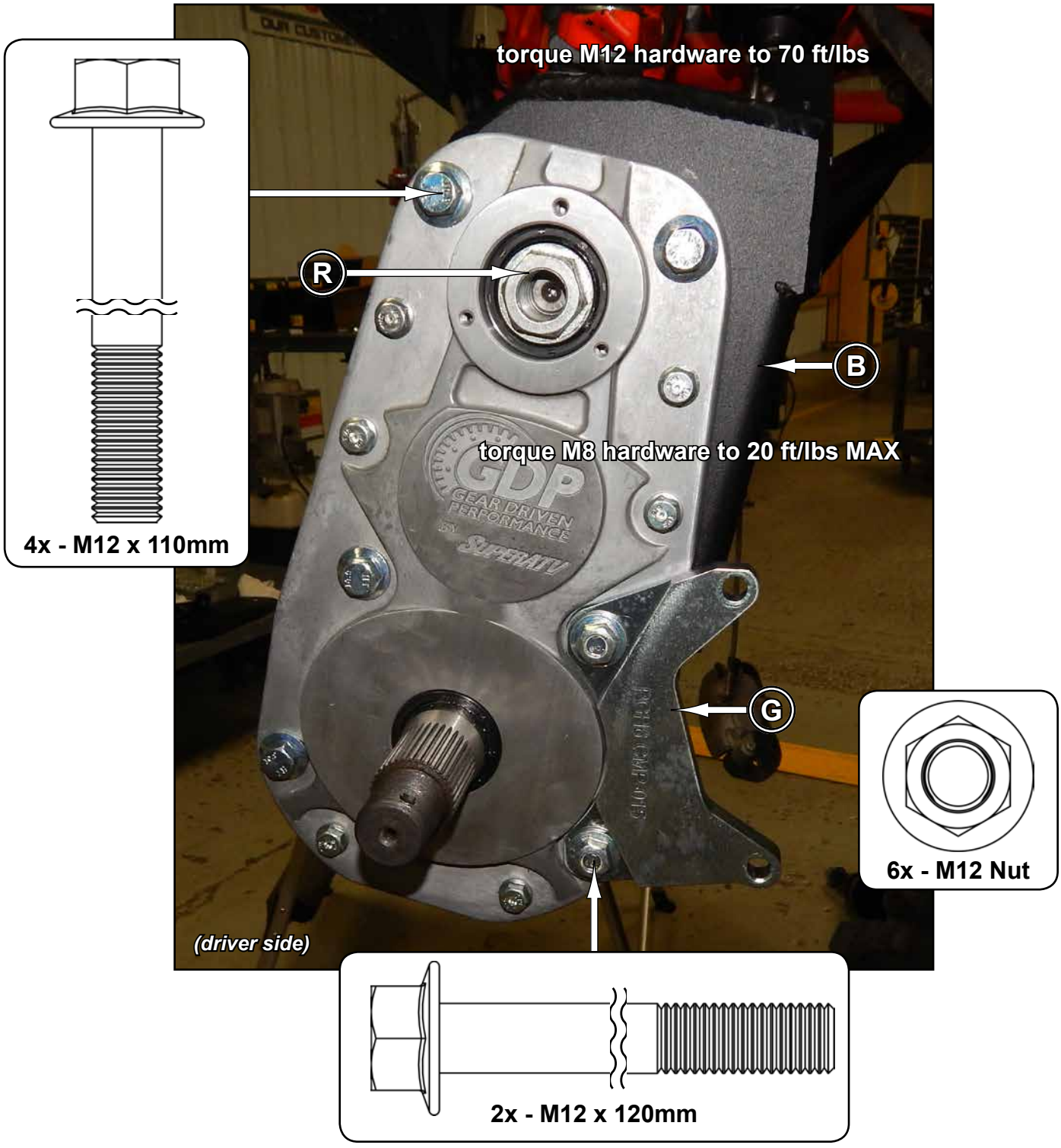

Tighten all hardware completely.

Front continued:

- Secure Cap (C) and Gasket (D) to Gear Box (B) with hardware shown. Tighten hardware completely.
- Secure Rotor (A) to Gear Box Axle Shaft with hardware shown.



Castle Nut:

- Torque to minimum 300 Ft/Lbs.
- Continue tightening until Cotter Pin can be installed.

Tighten hardware completely and repeat steps for opposite side.

Front continued:

- Front Calipers must be switched; passenger side to driver side. Bleeder Valves must face up.
- Secure Calipers to Caliper Mounting Brackets (G-P) with stock hardware.



- Install provided Brake Lines to Master Cylinder and provided T-Fitting.
- Secure provided T-Fitting to stock location with hardware shown. T-Fitting Spacer goes under T-Fitting.
- Route Front Brake Lines from T-Fitting to Calipers. Follow stock Brake Lines path.
- Ensure that no binding, rubbing, or interference can occur.
- Secure Brake Lines with provided Clips and hardware.

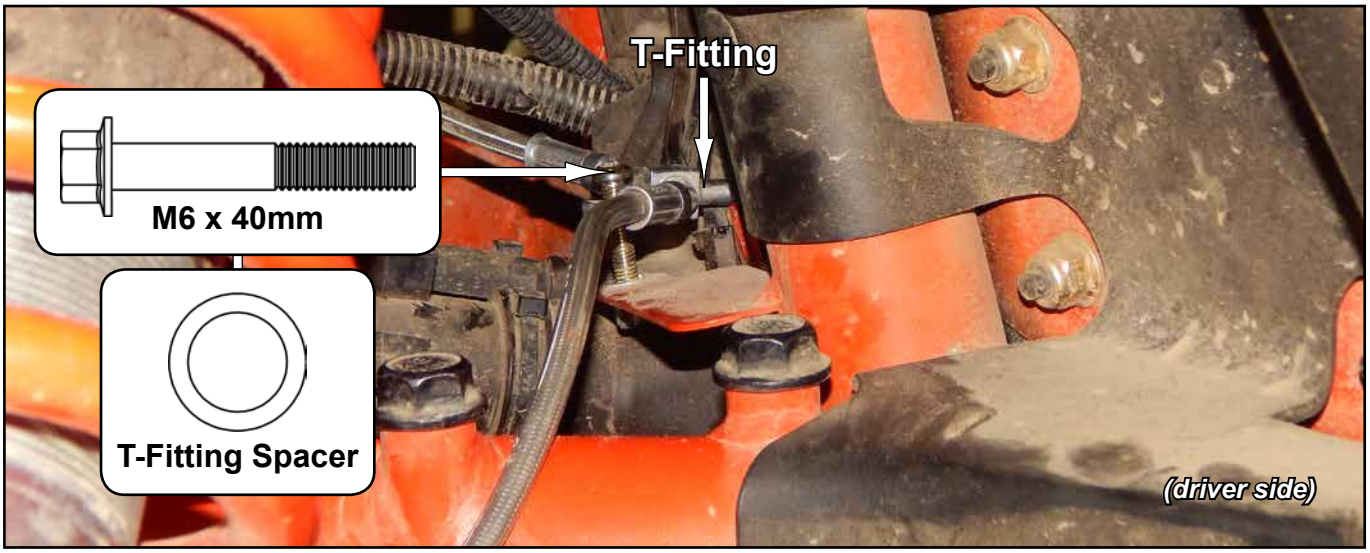

Rear: *do not tighten hardware completely unless noted.*

- Install stock or new Retaining Rings and Radial Joints into Bearing Carriers (K)(L).
- Use Heim Tool and a hammer when installing.



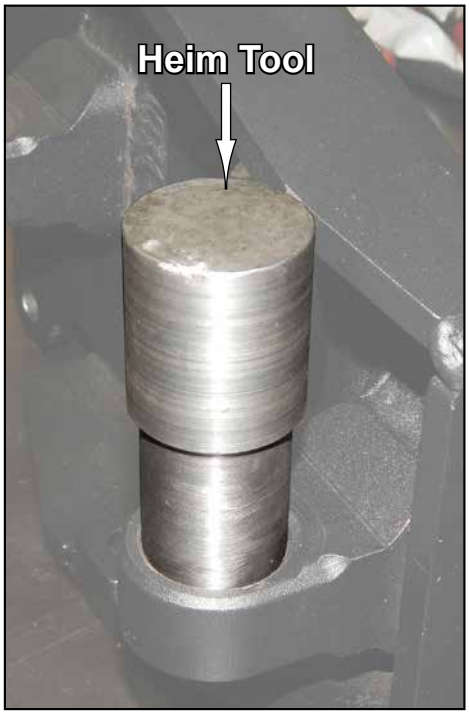

- Install Left Bearing Carrier (L) to Rear Arm and Control Links with stock hardware.



Rear continued:

- Install Gear Box (B) and Left Caliper Mounting Bracket (G) to Left Bearing Carrier (L) with hardware shown.
- Secure stock Axle with Recessed Nut (R); use thread locker.

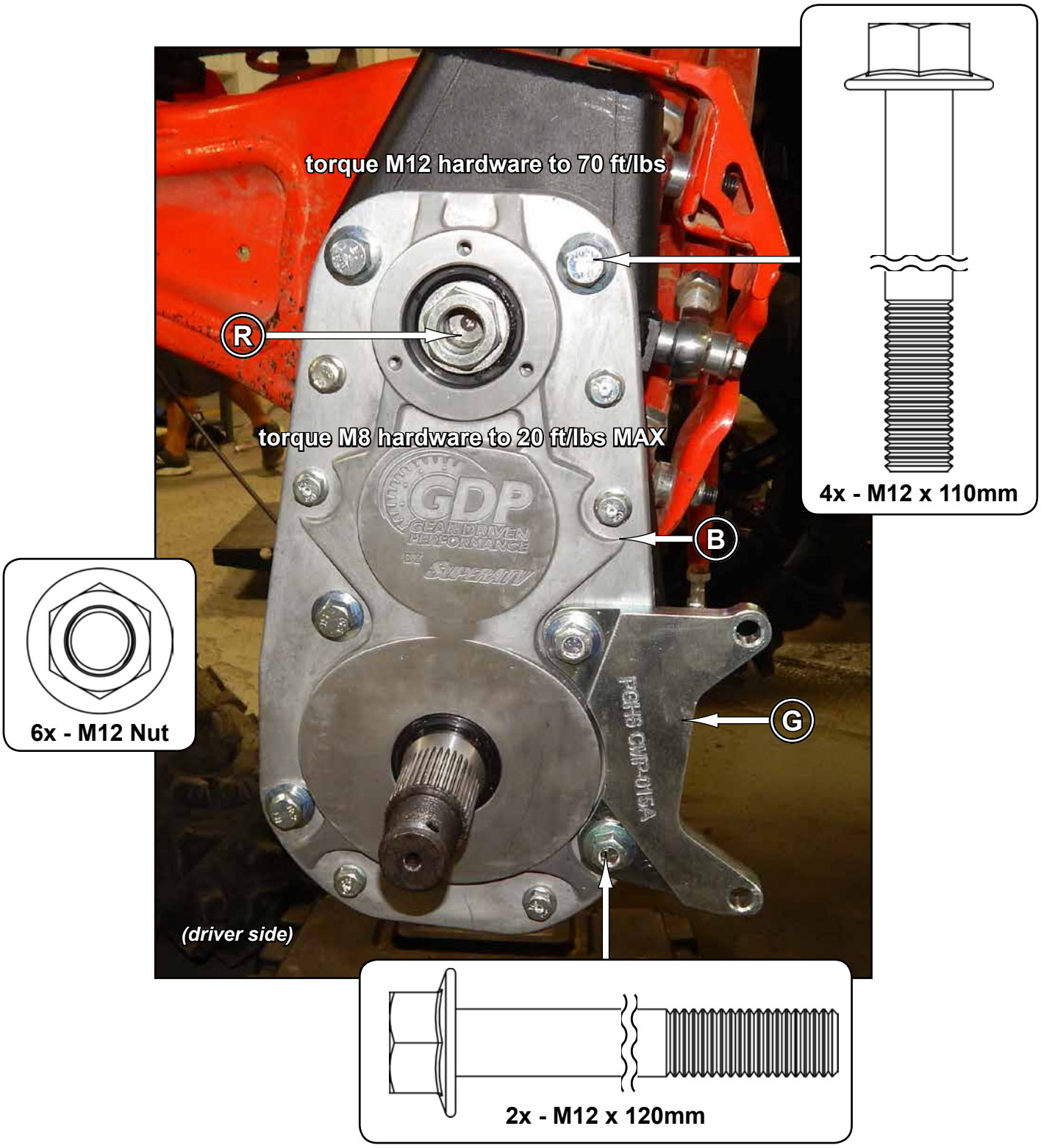

Repeat steps for opposite side and tighten all hardware completely.

Rear continued:

- Secure Gasket (D) and Cap (C) to Gear Box (B) with hardware shown.
- Secure Rotor (A) to Gear Box Axle Shaft with hardware shown.

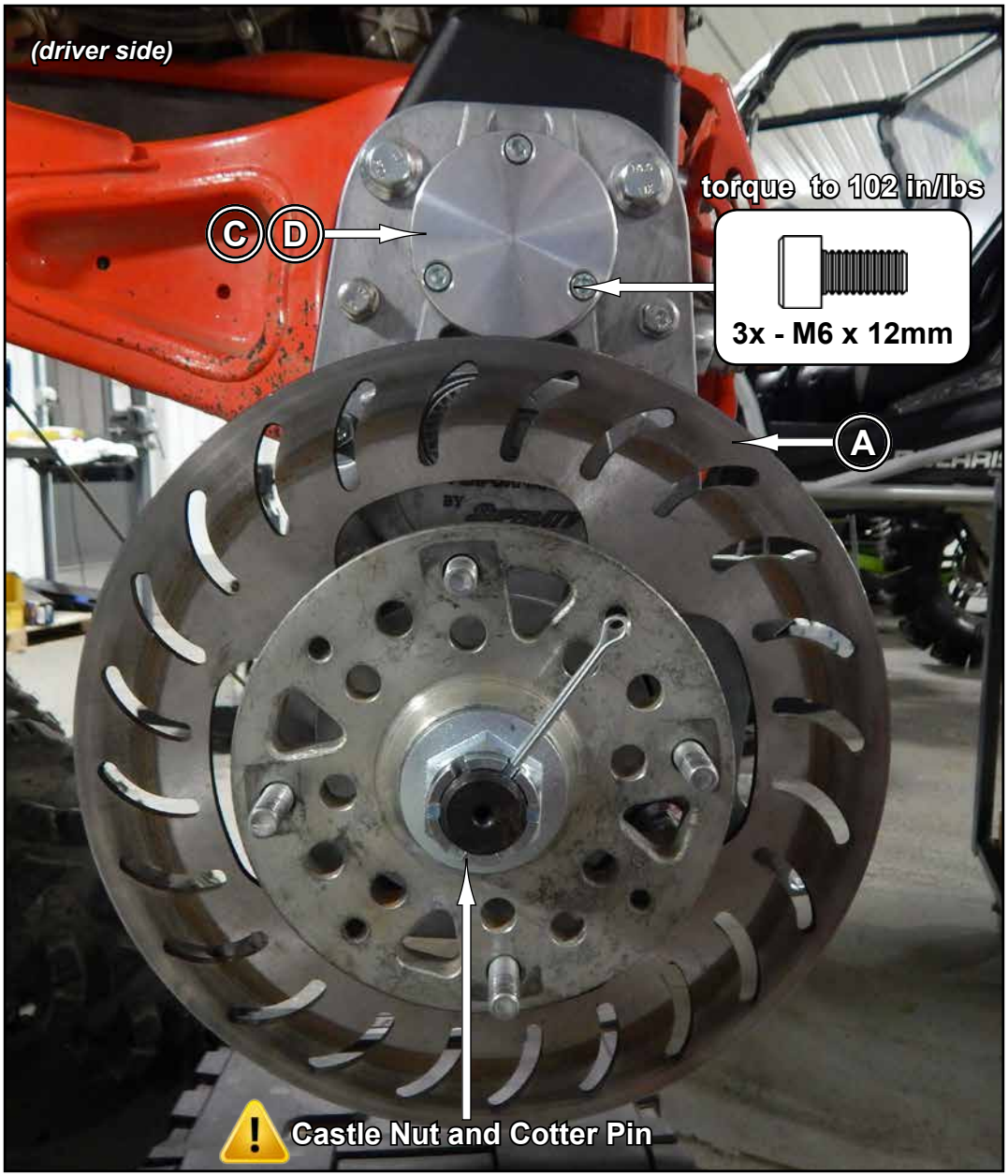

Castle Nut:

- Torque to minimum 300 Ft/Lbs.
- Continue tightening until Cotter Pin can be installed.

Repeat steps for opposite side and tighten all hardware completely.

Rear Brake Lines:

- Install provided Brake Lines to Master Cylinder and provided T-Fitting.
- Secure provided T-Fitting to stock location with hardware shown. T-Fitting Spacer goes under T-Fitting.
- Reinstall components previously removed.
- Route Rear Brake Lines from T-Fitting to Calipers.
- Follow stock Brake Lines path.
- Ensure that no binding, rubbing, or interference can occur.

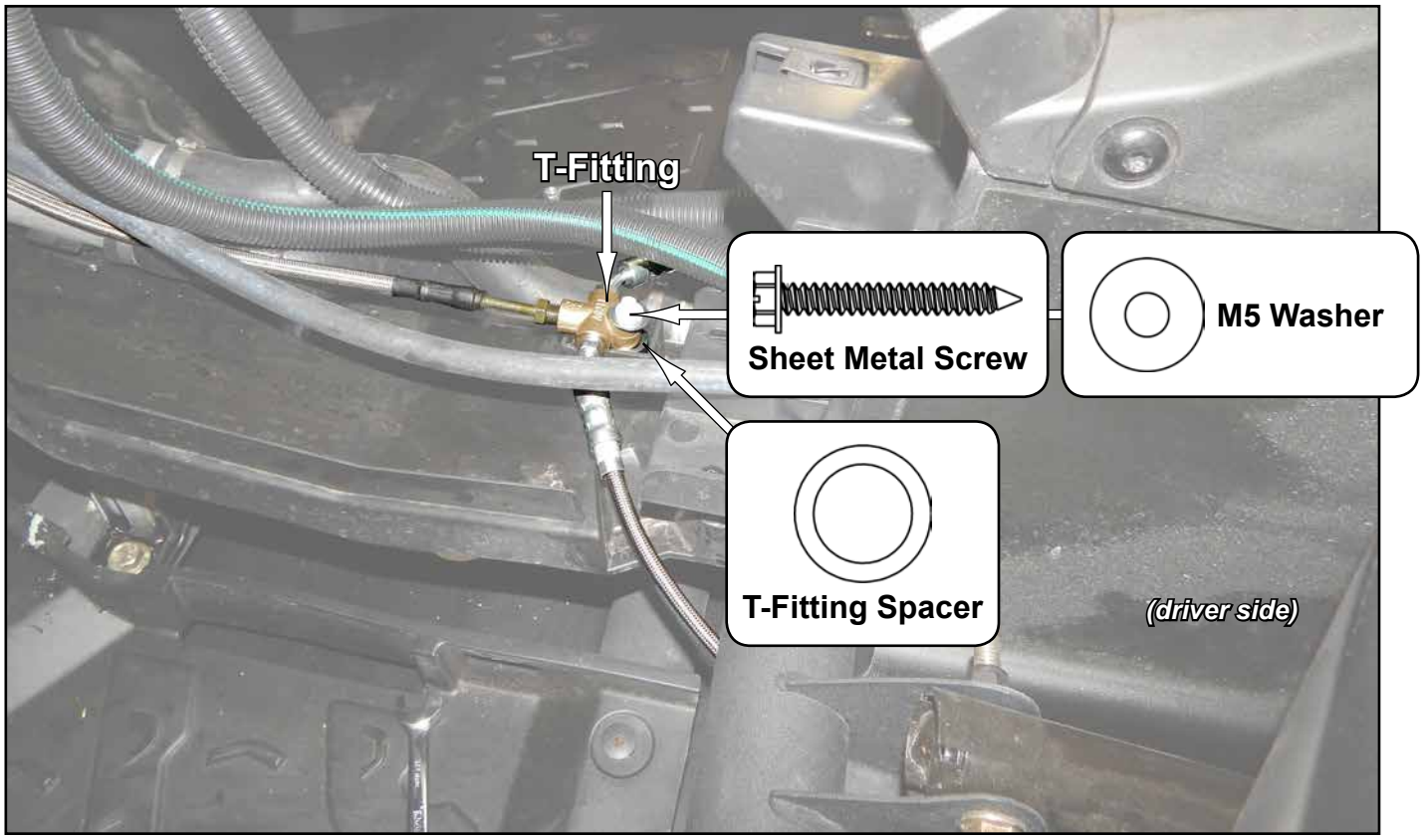

- Rear Calipers must be switched; passenger side to driver side. Bleeder Valves must face up.
- Secure Calipers to Caliper Mounting Brackets with stock hardware.

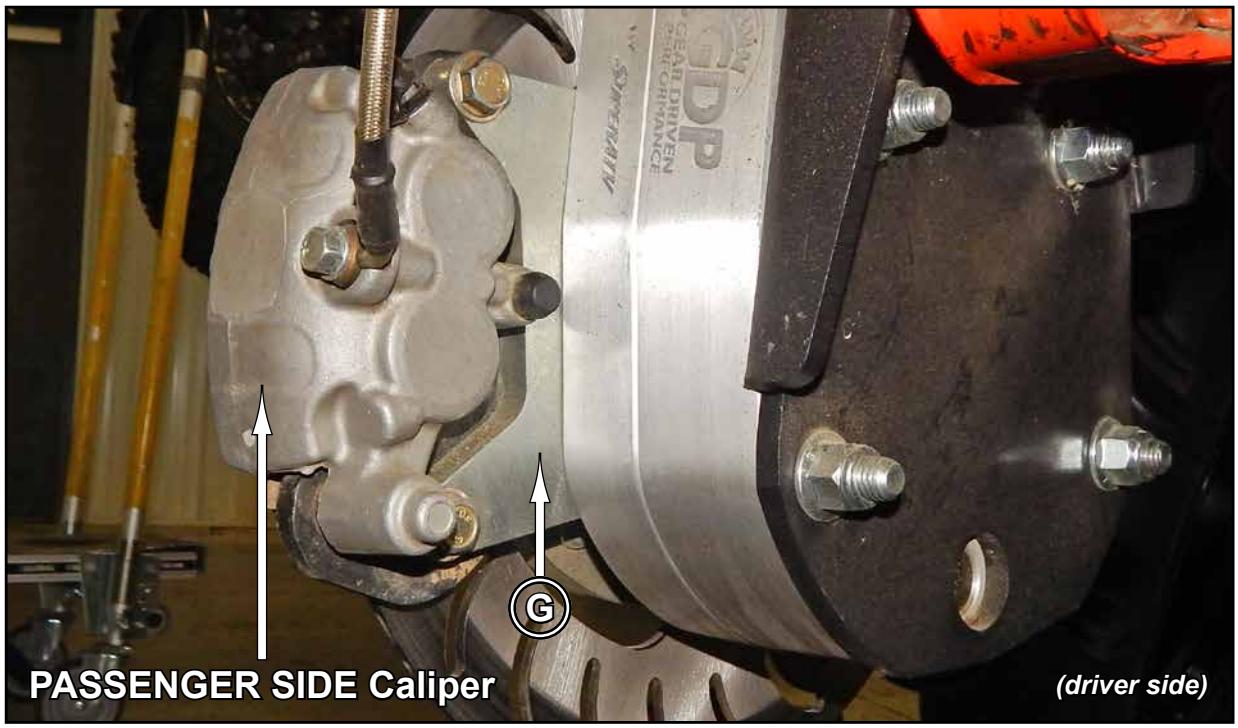

Rear Brake Lines continued:

- Secure to Rear Arms with provided Brake Line Clips and hardware shown.
- Tighten all hardware completely.
- Bleed system.

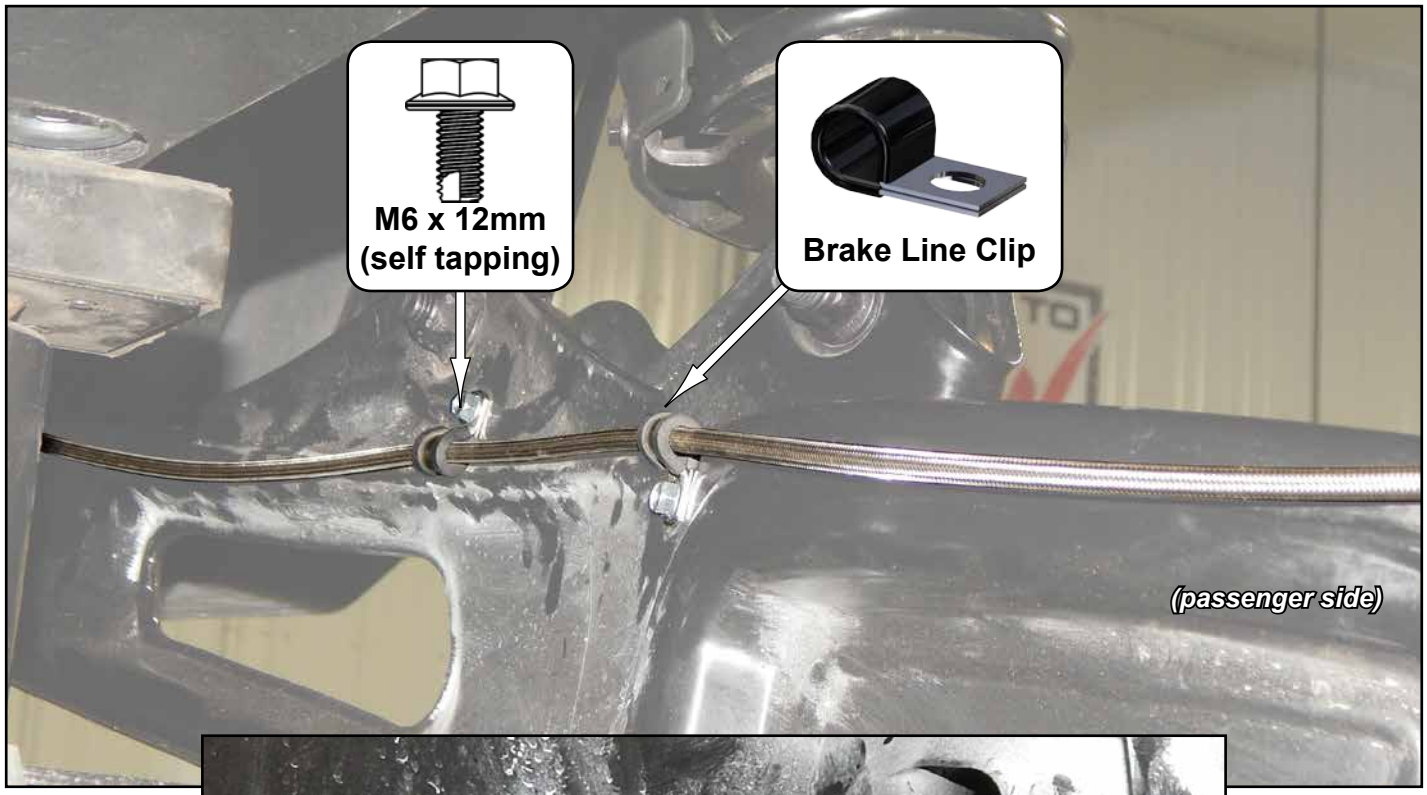



- Locate Fill hole that is easiest to access and remove Plug.
- Attach a hose to a funnel and fill each Gear Box with 80W-90 Gear Oil.
- Fill up to fill holes.
- Reinstall Plug. **Torque to 10 ft/lbs**
- Repeat for remaining Gear Boxes.



Instructions for OPTIONAL Frame Stiffener, Winch Mount, etc. included.

Disregard if only Portal Gear Hubs are being installed.

2753 Michigan Road • Madison, Indiana 47250 • 855-743-3427

INSTALLATION INSTRUCTIONS

Frame Stiffener:

for Can-Am Maverick X3 w/Smart-Lok™ Differential

Item	Description
A	Tube Clamp
B	Arm Support
C	Frame Support
D	Rear Support

Item	Description
E	Front Support
F	Spacer
G	Stiffener

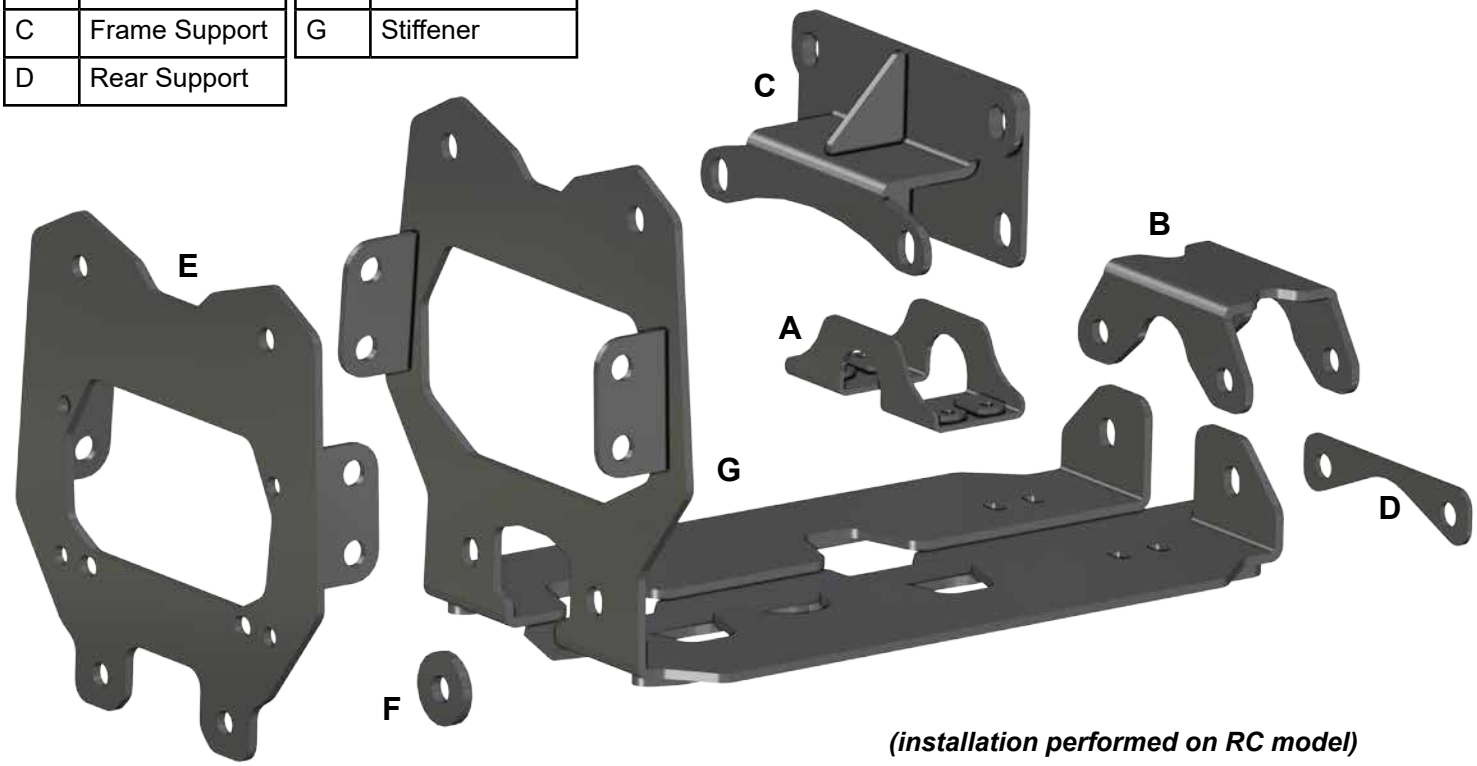

(installation performed on RC model)

Liability Statement

SuperATV's® products are designed to best fit user's ATV/UTV under stock conditions. Adding, modifying, or fabricating any factory or aftermarket parts will void any warranty provided by SuperATV® and is not recommended. SuperATV's® products could interfere with other aftermarket accessories. If user has aftermarket products on machine, contact SuperATV® to verify that they will work together.

Although SuperATV® has thousands of satisfied customers, user should be aware that installing lift kits, long travel, or suspension kits, tires, etc. will change the ride of machine and may increase maintenance and part wear. Operating any off-road machine while, or after, consuming alcohol and/or drugs increases risk of bodily harm or death. No warranty or representation is made as to this product's ability to protect user from severe injury or death. SuperATV® urges operators and occupants to wear a helmet and appropriate riding gear at all times.

By purchasing and installing SuperATV® products, user agrees that should damages occur, SuperATV® will not be held responsible for loss of time, use, labor fees, replacement parts, or freight charges. SuperATV®, nor any 3rd party, will not be held responsible for any direct, indirect, incidental, special, or consequential damages that result from any product purchased from SuperATV®. The total liability of seller to user for all damages, losses, and causes of action, if any, shall not exceed the total purchase price paid for the product that gave rise to the claim.

SuperATV® will warranty only parts provided by SuperATV®. Any damage or problems with OEM housings, bearings, seals, or other manufacturers' products will not be covered by SuperATV®. SuperATV® parts and products are not warrantied if item was not installed properly, misused, or modified.

Installing, adding, modifying, or fabricating any factory or aftermarket product to your ATV/UTV may violate certain local, state, and federal laws. Be advised that laws vary depending on town, city, county, state, etc. Use of certain products on public streets, roads, or highways may be in violation law. The Buyer is solely and exclusively legally and personally responsible for any violation of the law by the installation or use of the product. You must abide by all local, state, and federal laws, including but not limited to vehicle safety, traffic laws, and ordinances. It is your responsibility to know the laws and how they apply to you.

The Buyer is responsible to fully understand the capability and limitations of his/her vehicle according to manufacturer specifications, warnings and instructions and agrees to hold SuperATV® harmless from any damage resulting from failure to adhere to such specifications, warnings and/ or instructions. The Buyer is also responsible to obey all applicable federal, state, and local laws and ordinances when operating his/her vehicle while using this product, and the Buyer agrees to hold SuperATV® harmless from any violation thereof.

Need help with your installation?

sales@superatv.com

www.superatv.com

1-855-743-3427

8:00am - 8:00pm EST M-Th
8:00am - 7:00pm EST Friday
9:00am - 2:00pm EST Saturday

Read instructions and view illustrations before beginning.

Thank You For Choosing

© 2019 SuperATV.com®. All Rights Reserved.

Keep all components removed from machine.

- Remove hardware shown from Front Fascia.



- Remove Front Deflector.

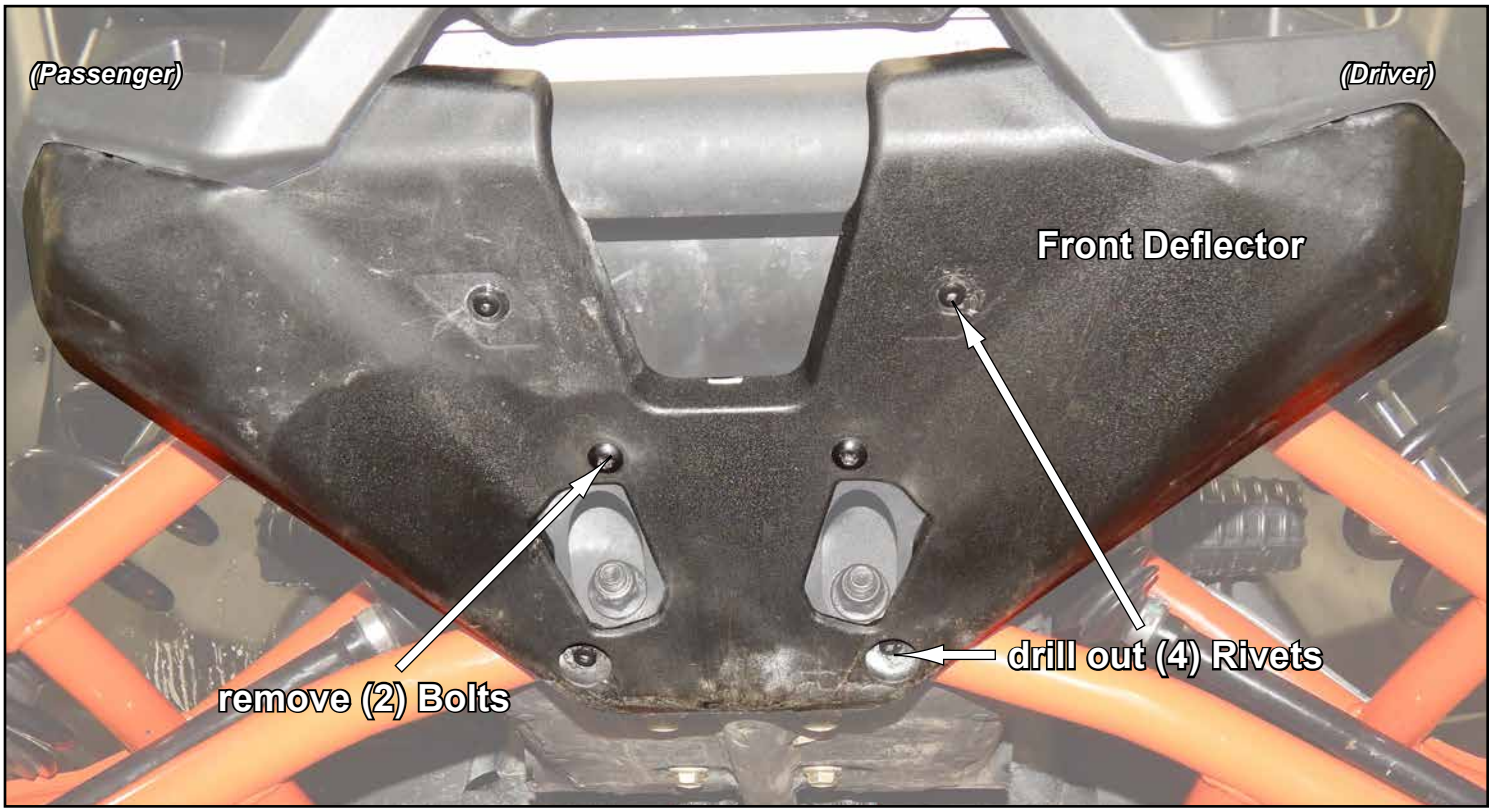

- Remove stock Bulkhead from machine.



- Remove components shown from Front A-Arms.

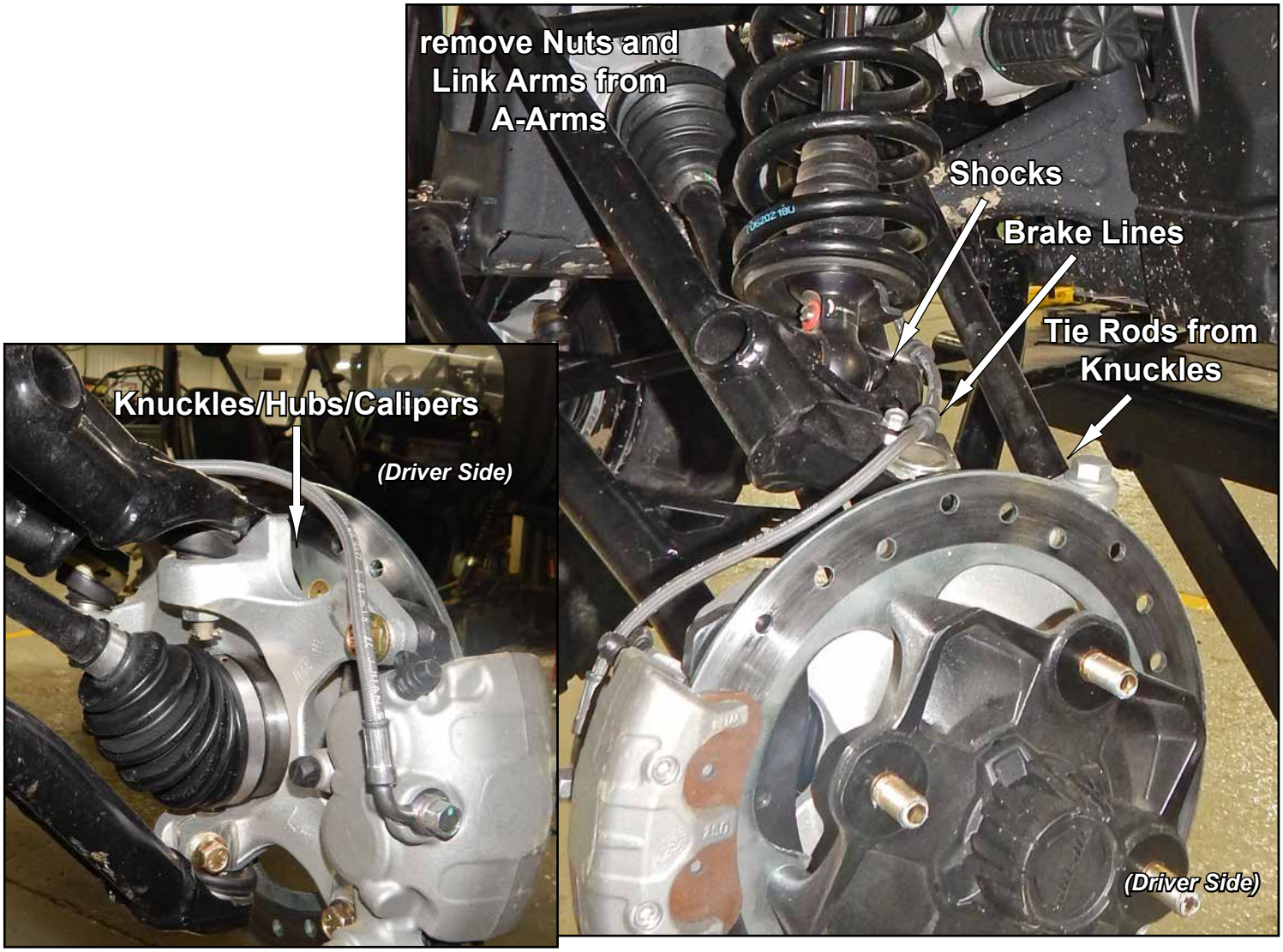

Remove front Axles.

- Remove hardware shown from Shroud.

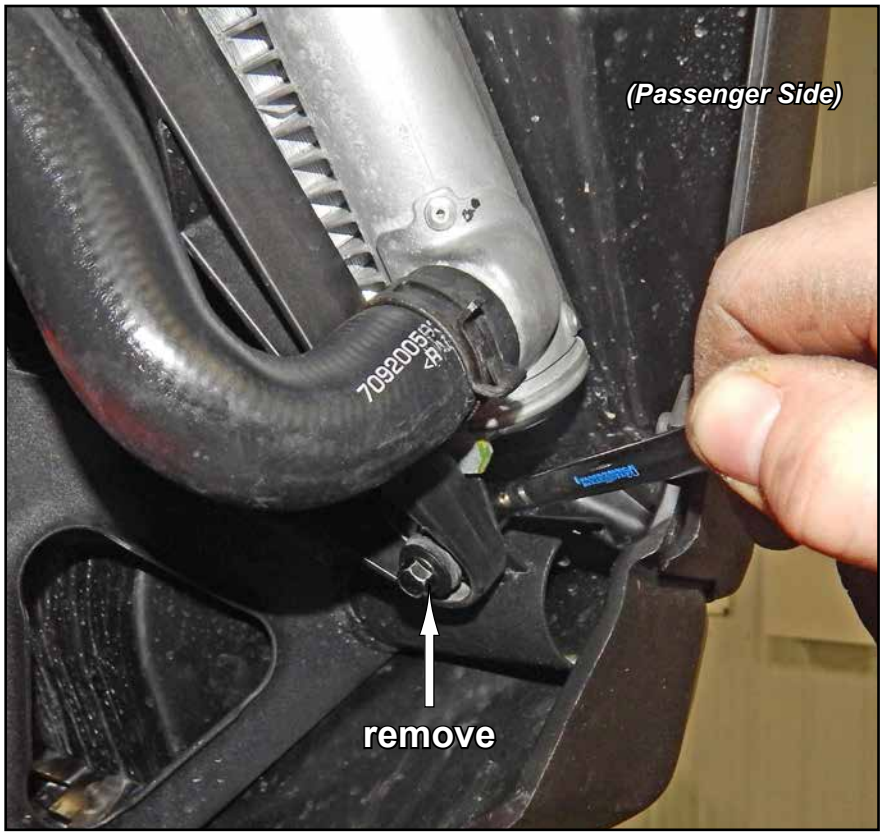



- If present, remove stock Lower Radiator Deflector from machine.



Remove A-Arms from machine.

- Remove Front Differential and all A-Arm hardware.





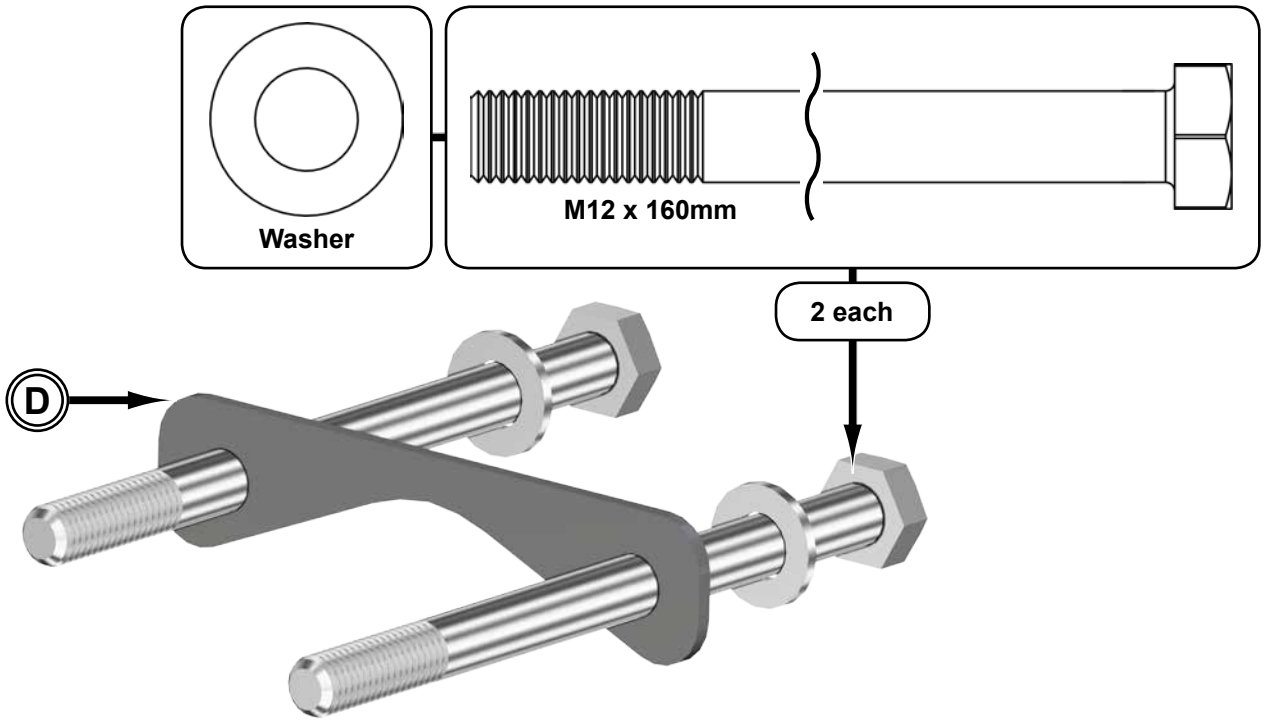

- Install Rear Support (D) and hardware shown to stock A-Arm hardware location.

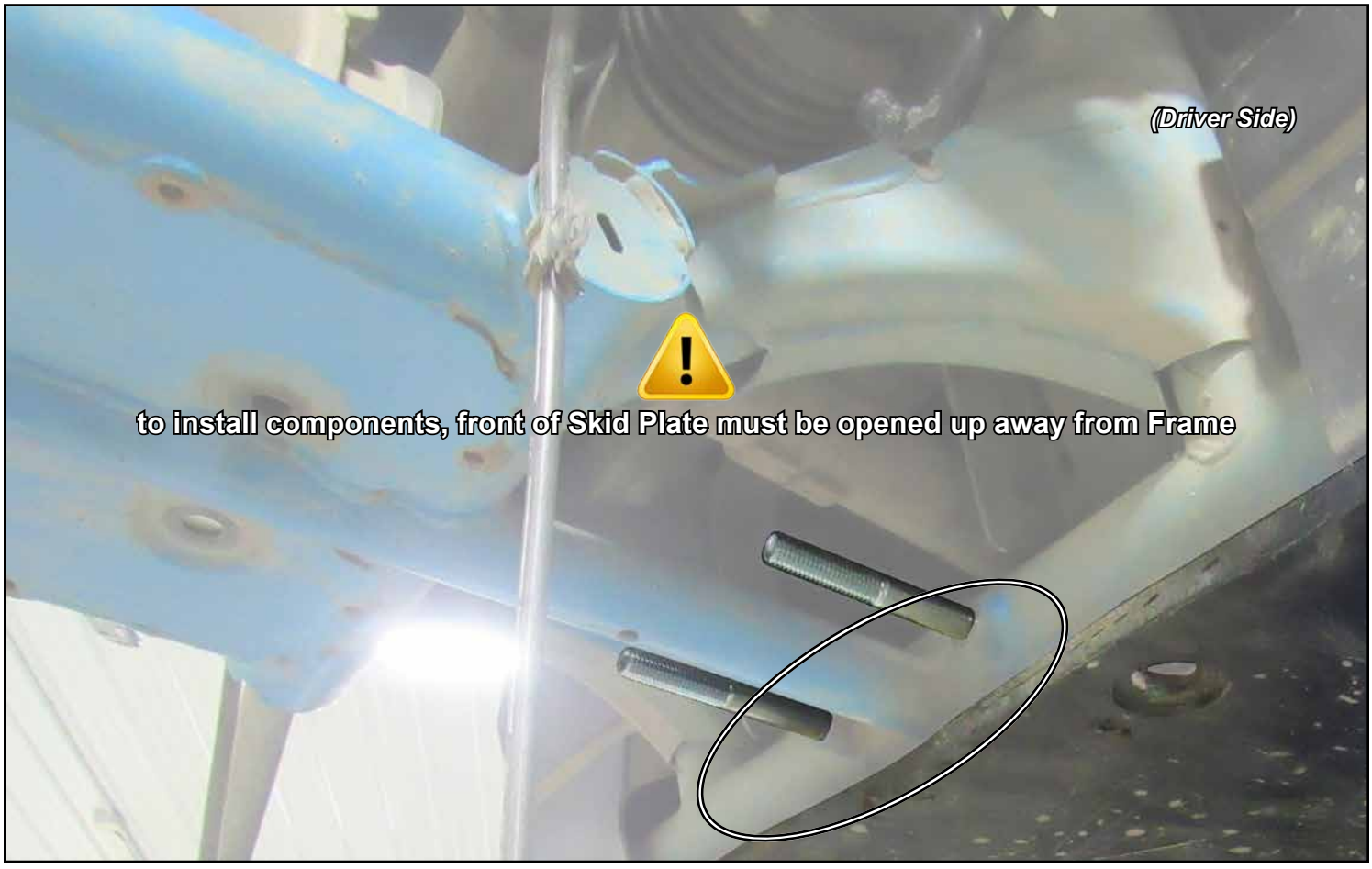

- Install Stiffener (G) with hardware shown.

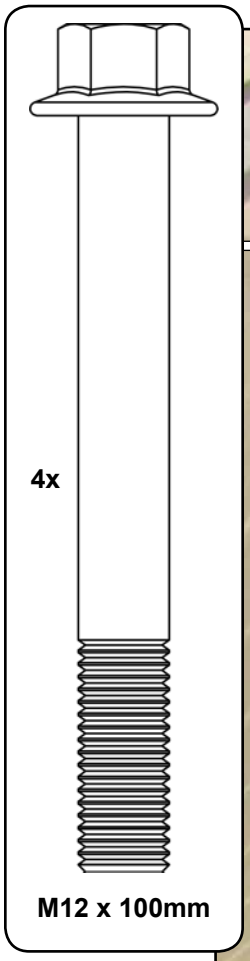



do not tighten any harwdware completely unless noted



- Secure Tube Clamp (A) to Stiffener (G) with hardware shown.

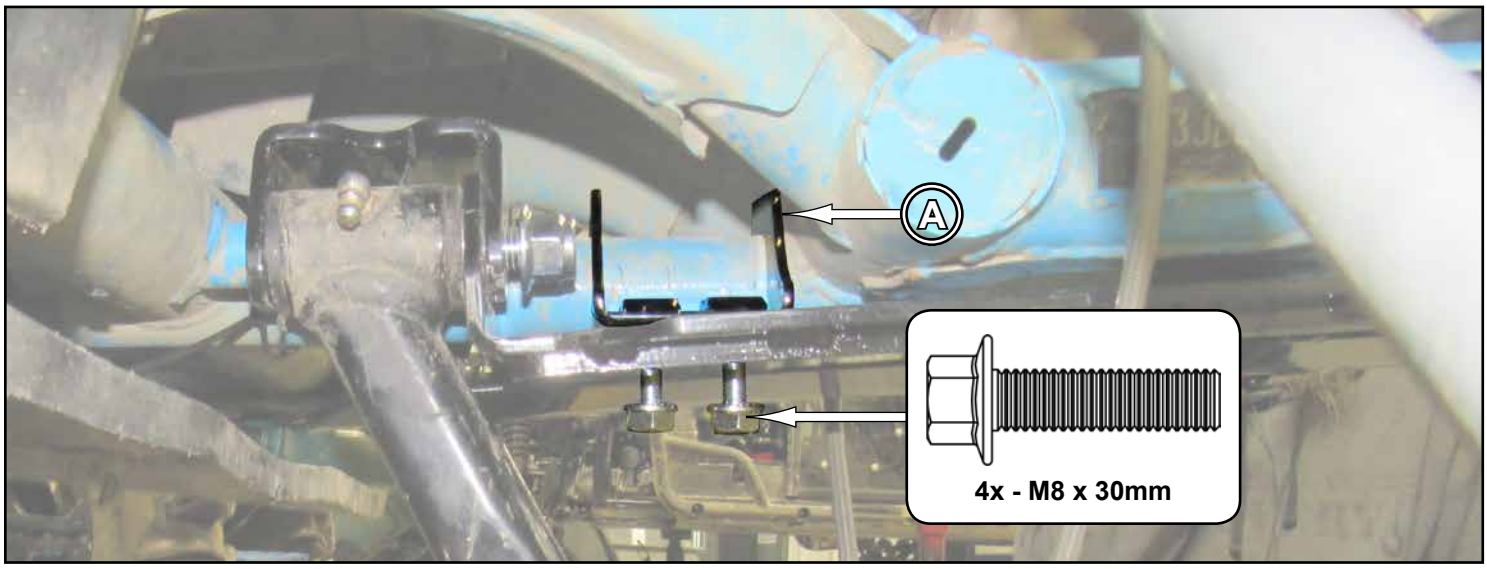

- Install Frame Support (C) with hardware shown.

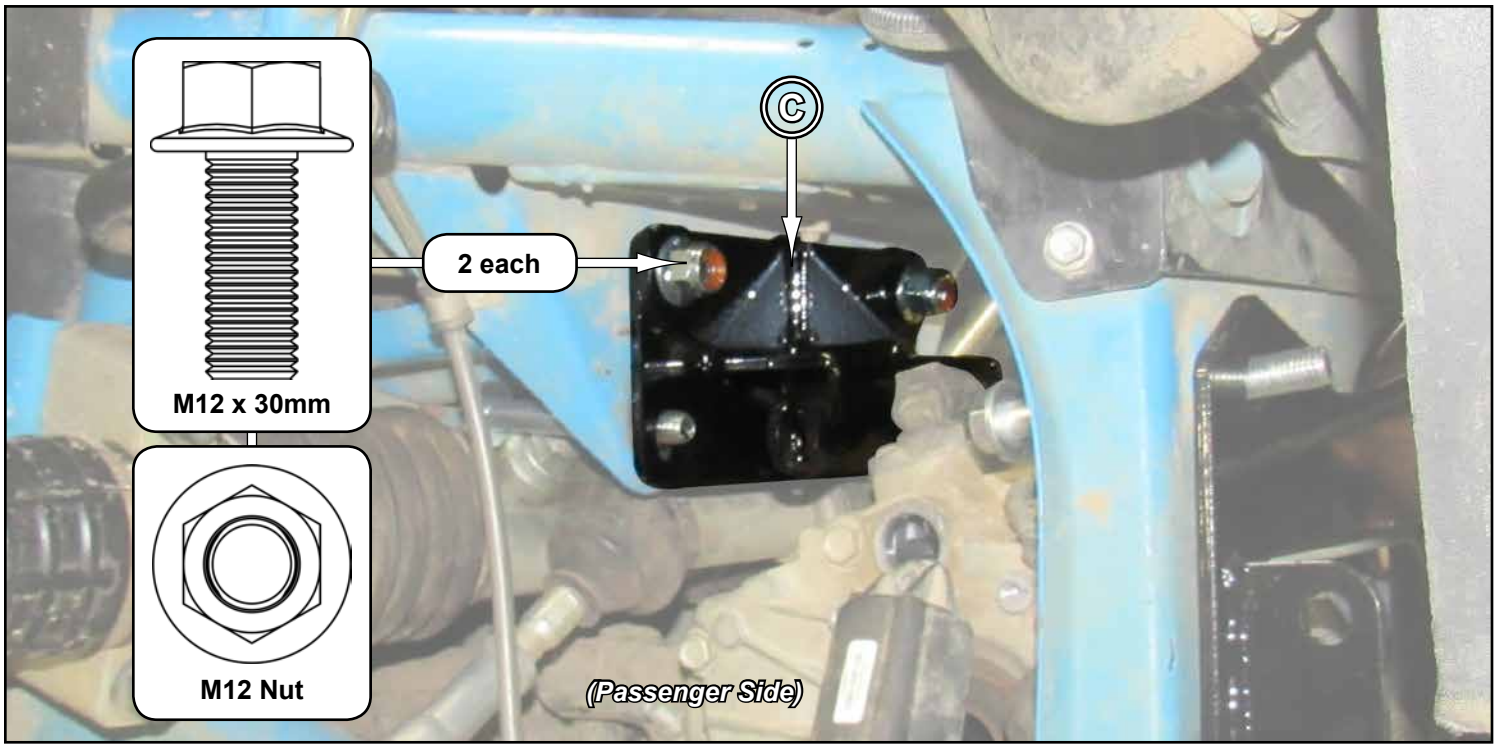

- Install Upper A-Arms with hardware shown.

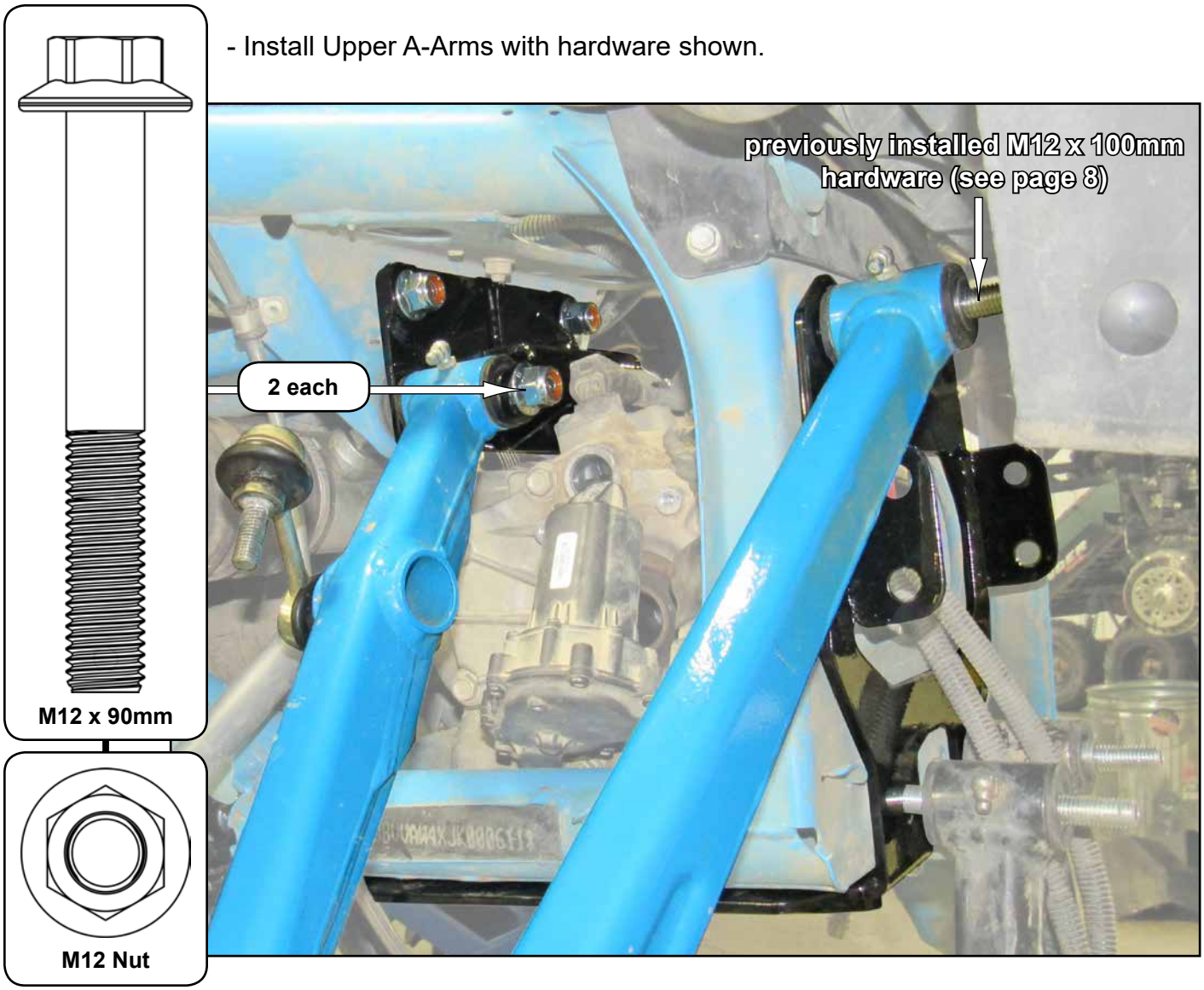

- Install Front Support (E) onto previously installed M12 x 100mm hardware.
- Temporarily install Nuts.

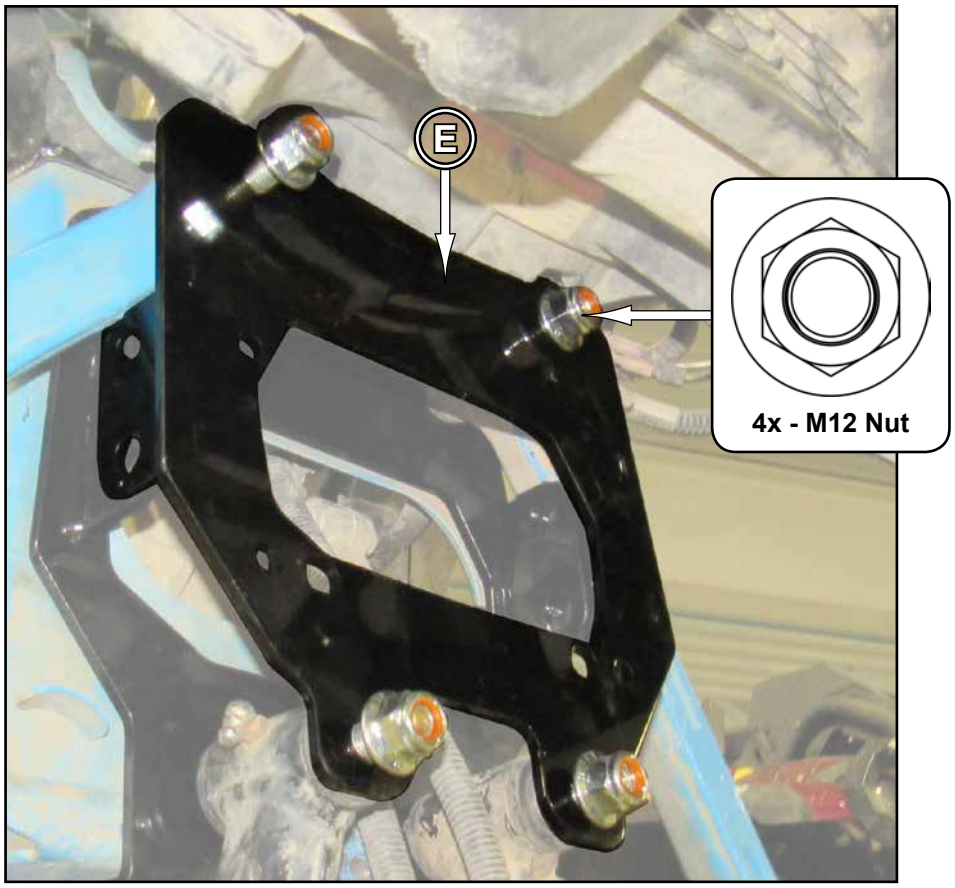

- Secure Front Support (E) to Stiffener (G) with hardware shown.



tighten all hardware completely

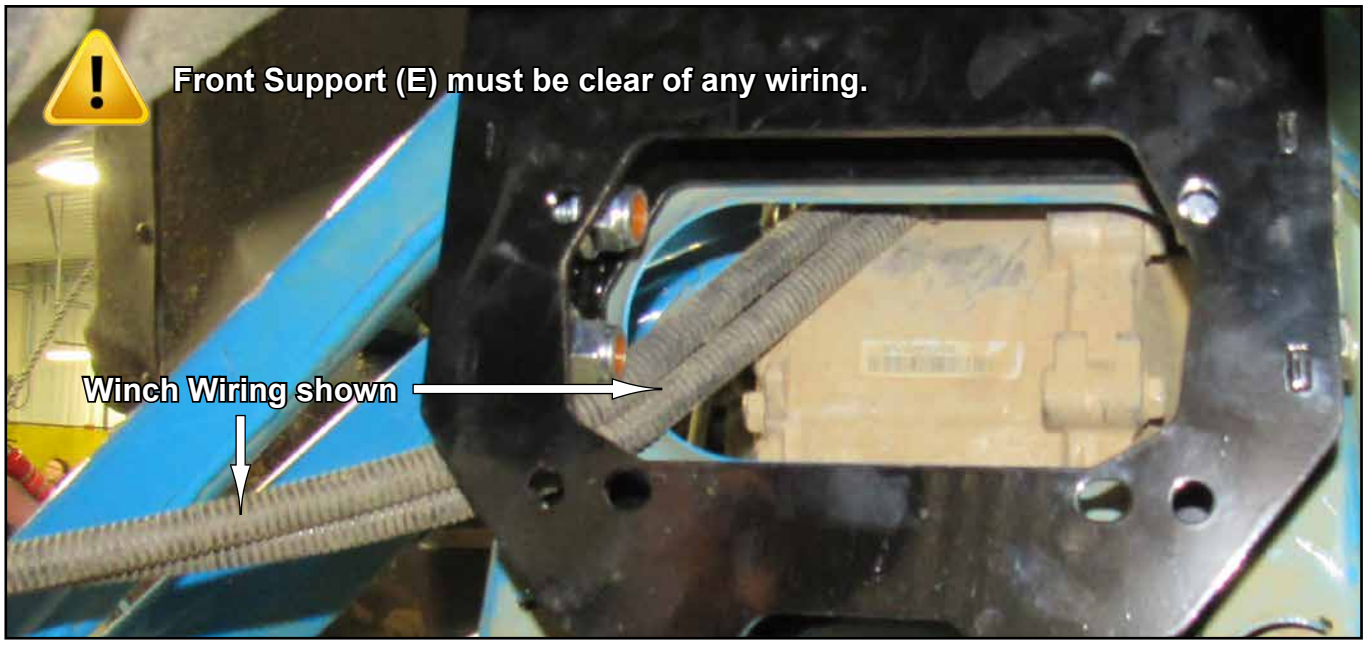

- Reinstall Bulkhead; reinstall Nuts.

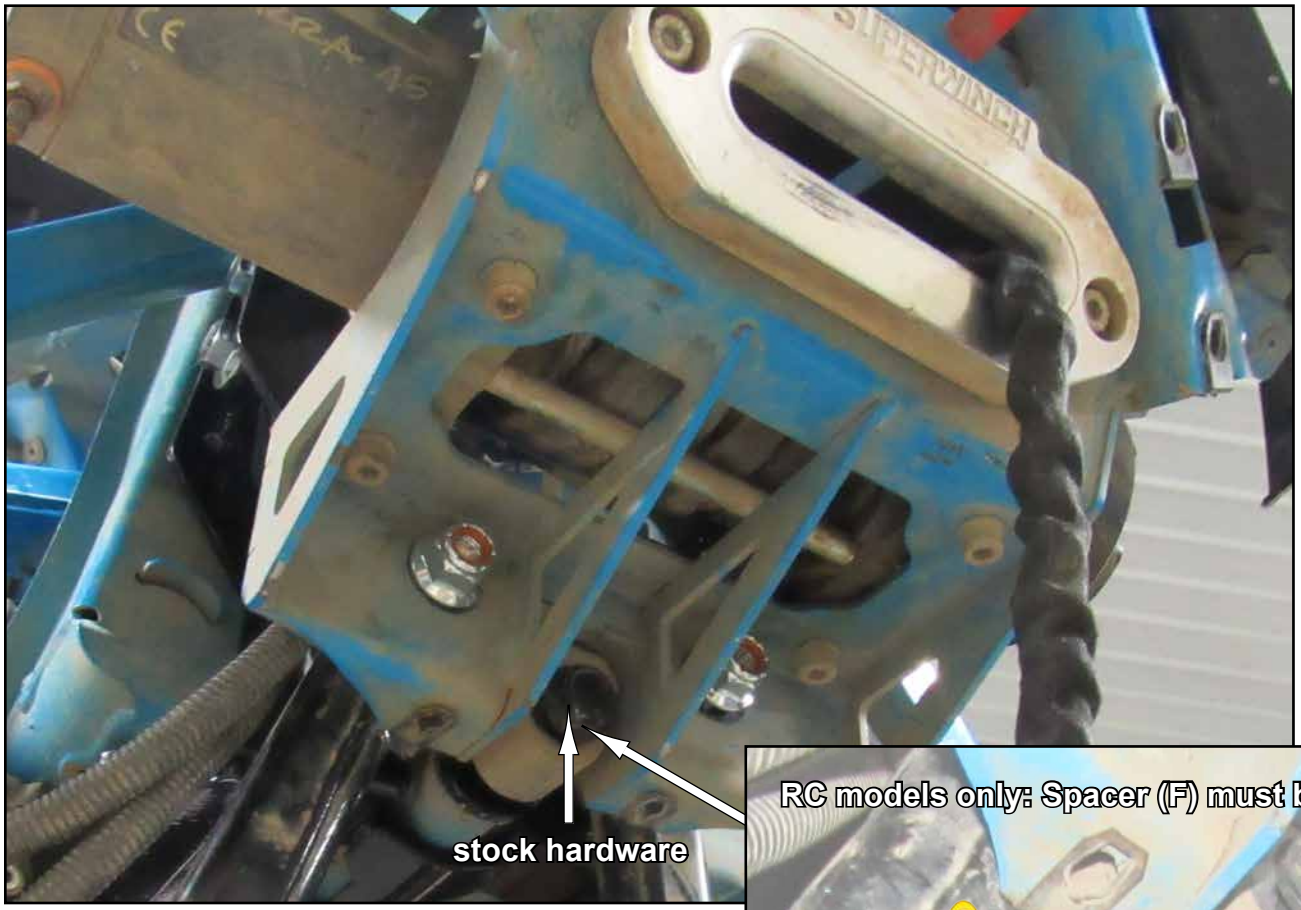

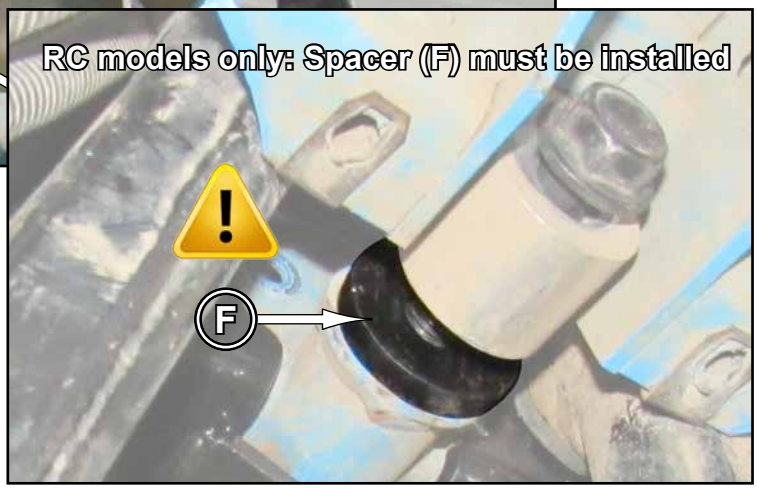

If SuperATV Winch is installed, secure Winch with provided M8 x 30mm 10.9 bolts

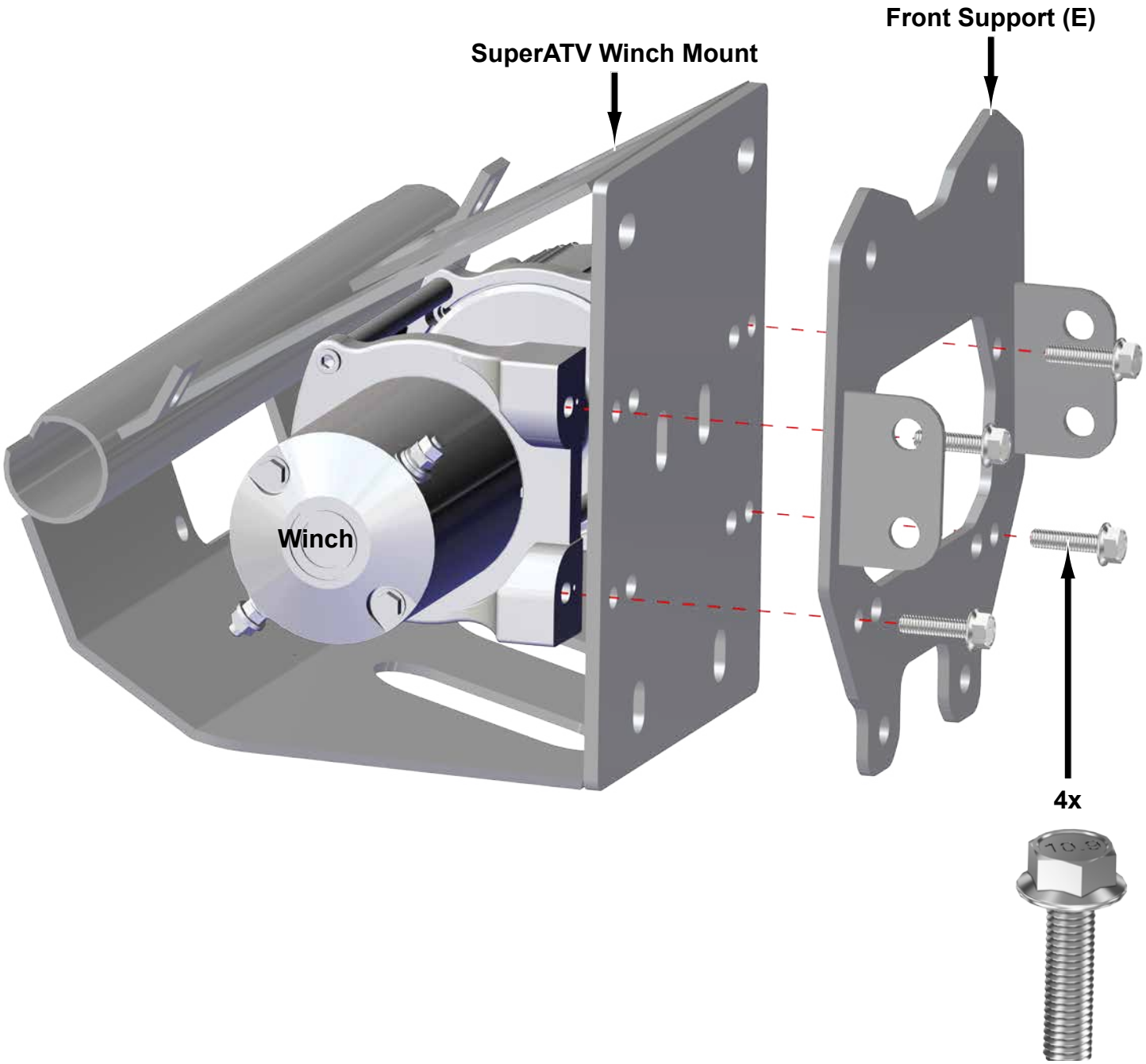

2753 Michigan Road • Madison, Indiana 47250 • 855-743-3427

INSTALLATION INSTRUCTIONS

Winch Mount: for Can-Am Maverick X3

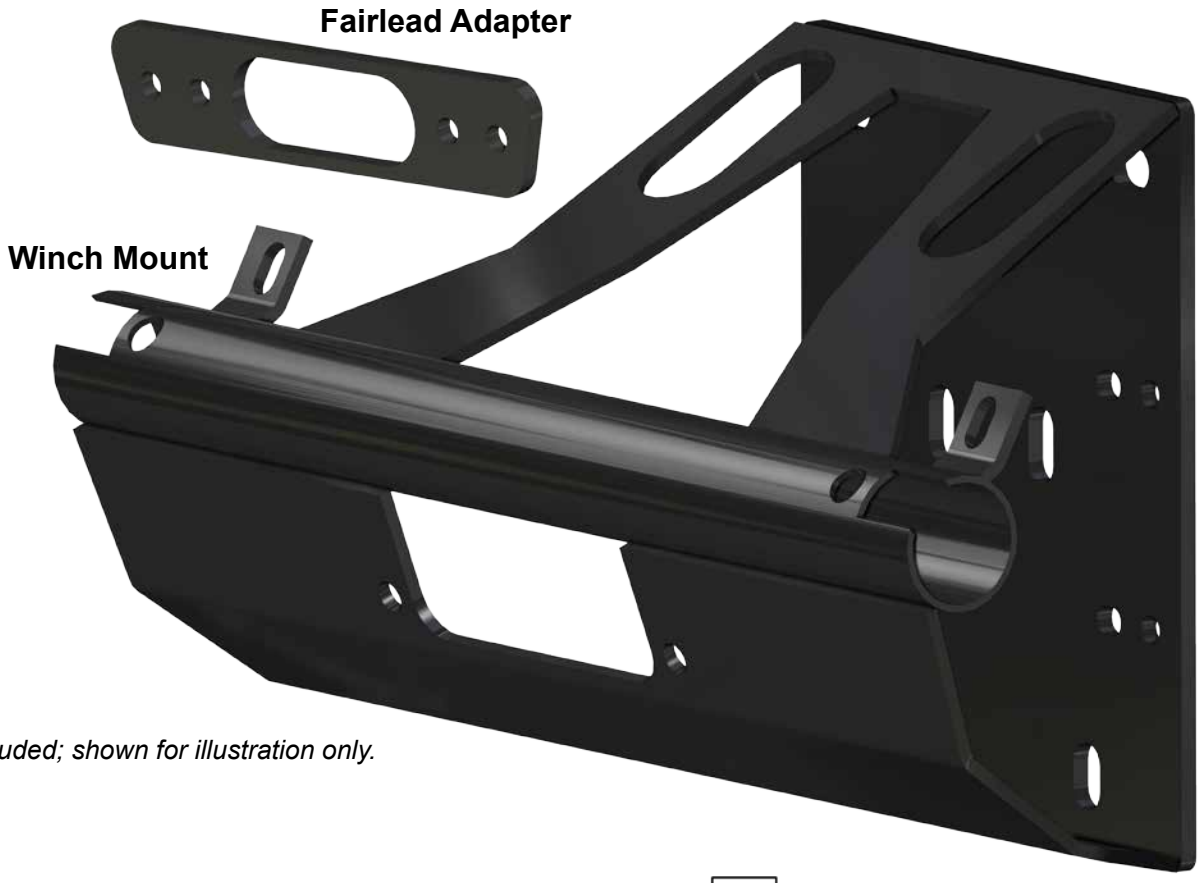

Winch not included; shown for illustration only.

2x  **M6-1.0 x 25mm Lg.**

2x 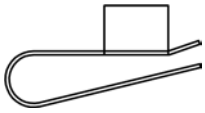 **M6 Clip Nut**

2x 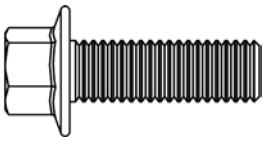 **M8-1.25 x 25mm Lg. FHCS**

2x  **M8-1.25 Nylock Nut**

2x 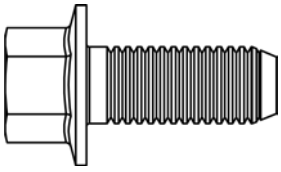 **M10-1.50 x 25mm Lg.***

2x 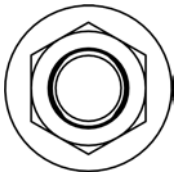 **M10-1.50 Nylock Nut***

**Use only if SuperATV Frame Stiffener is installed.*

Need help with your installation?

sales@superatv.com

www.superatv.com

1-855-743-3427

8:00am - 8:00pm EST M-Th
8:00am - 7:00pm EST Friday
9:00am - 2:00pm EST Saturday

Read instructions and view illustrations before beginning.

Thank You For Choosing

© 2017 SuperATV.com®. All Rights Reserved.

Liability Statement

SuperATV's® products are designed to best fit user's ATV/UTV under stock conditions. Adding, modifying, or fabricating any factory or aftermarket parts will void any warranty provided by SuperATV® and is not recommended. SuperATV's® products could interfere with other aftermarket accessories. If user has aftermarket products on machine, contact SuperATV® to verify that they will work together.

Although SuperATV® has thousands of satisfied customers, user should be aware that installing lift kits, long travel, or suspension kits, tires, etc. will change the ride of machine and may increase maintenance and part wear. Operating any off-road machine while, or after, consuming alcohol and/or drugs increases risk of bodily harm or death. No warranty or representation is made as to this product's ability to protect user from severe injury or death. SuperATV® urges operators and occupants to wear a helmet and appropriate riding gear at all times.

By purchasing and installing SuperATV® products, user agrees that should damages occur, SuperATV® will not be held responsible for loss of time, use, labor fees, replacement parts, or freight charges. SuperATV®, nor any 3rd party, will not be held responsible for any direct, indirect, incidental, special, or consequential damages that result from any product purchased from SuperATV®. The total liability of seller to user for all damages, losses, and causes of action, if any, shall not exceed the total purchase price paid for the product that gave rise to the claim.

SuperATV® will warranty only parts provided by SuperATV®. Any damage or problems with OEM housings, bearings, seals, or other manufacturers' products will not be covered by SuperATV®. SuperATV® parts and products are not warrantied if item was not installed properly, misused, or modified.

Installing, adding, modifying, or fabricating any factory or aftermarket product to your ATV/UTV may violate certain local, state, and federal laws. Be advised that laws vary depending on town, city, county, state, etc. Use of certain products on public streets, roads, or highways may be in violation law. The Buyer is solely and exclusively legally and personally responsible for any violation of the law by the installation or use of the product. You must abide by all local, state, and federal laws, including but not limited to vehicle safety, traffic laws, and ordinances. It is your responsibility to know the laws and how they apply to you.

The Buyer is responsible to fully understand the capability and limitations of his/her vehicle according to manufacturer specifications, warnings and instructions and agrees to hold SuperATV® harmless from any damage resulting from failure to adhere to such specifications, warnings and/ or instructions. The Buyer is also responsible to obey all applicable federal, state, and local laws and ordinances when operating his/her vehicle while using this product, and the Buyer agrees to hold SuperATV® harmless from any violation thereof.

Keep all components removed from machine.

- Remove hardware shown from Front Fascia.



- Remove Front Deflector; will not be reinstalled.

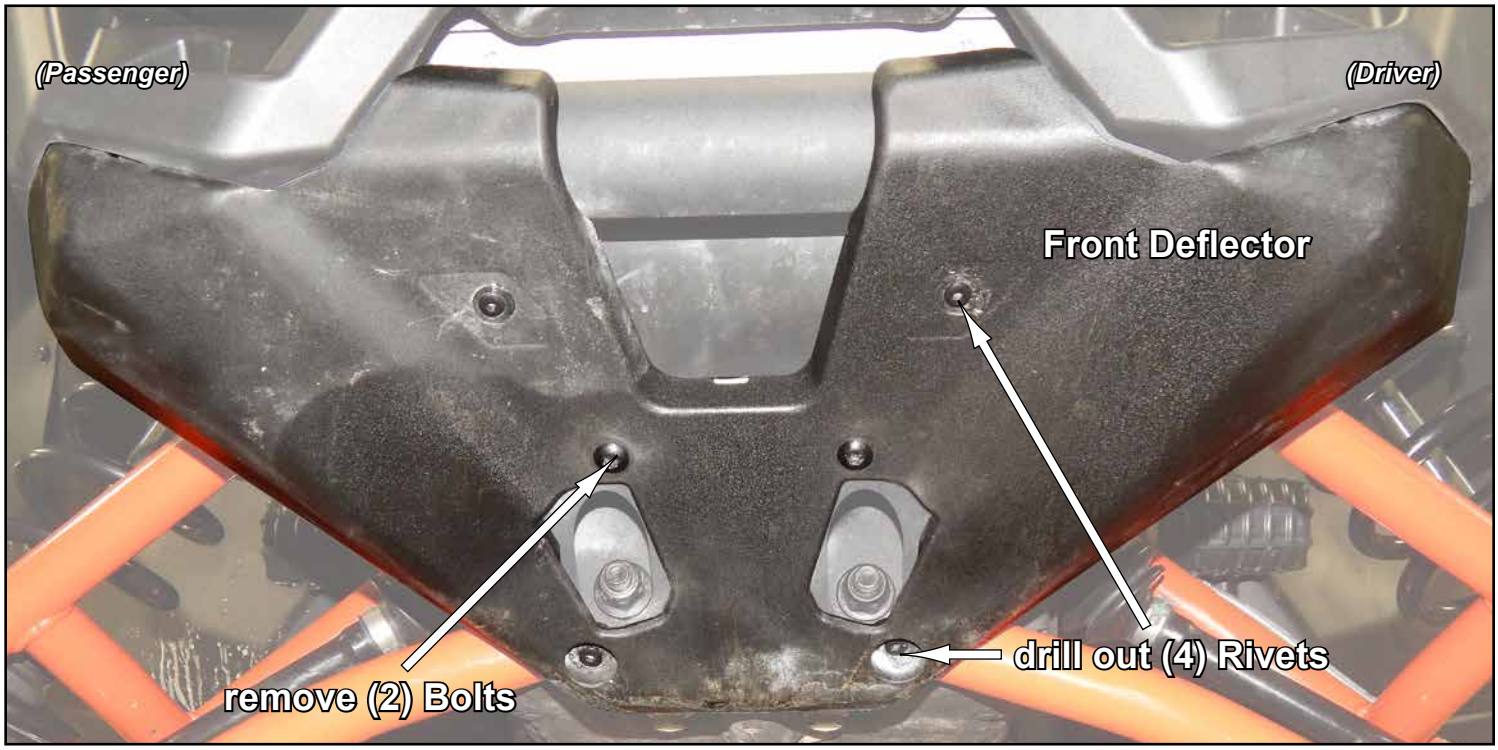

- Remove stock Bulkhead from machine. Bulkhead will be replaced with Winch Mount.



- Install Winch Mount onto A-Arm bolts.
- Reinstall A-Arm nuts and tighten completely.



Skip this step if SuperATV Frame Stiffener is not installed.

- Secure Winch Mount to Frame Stiffener with hardware shown.

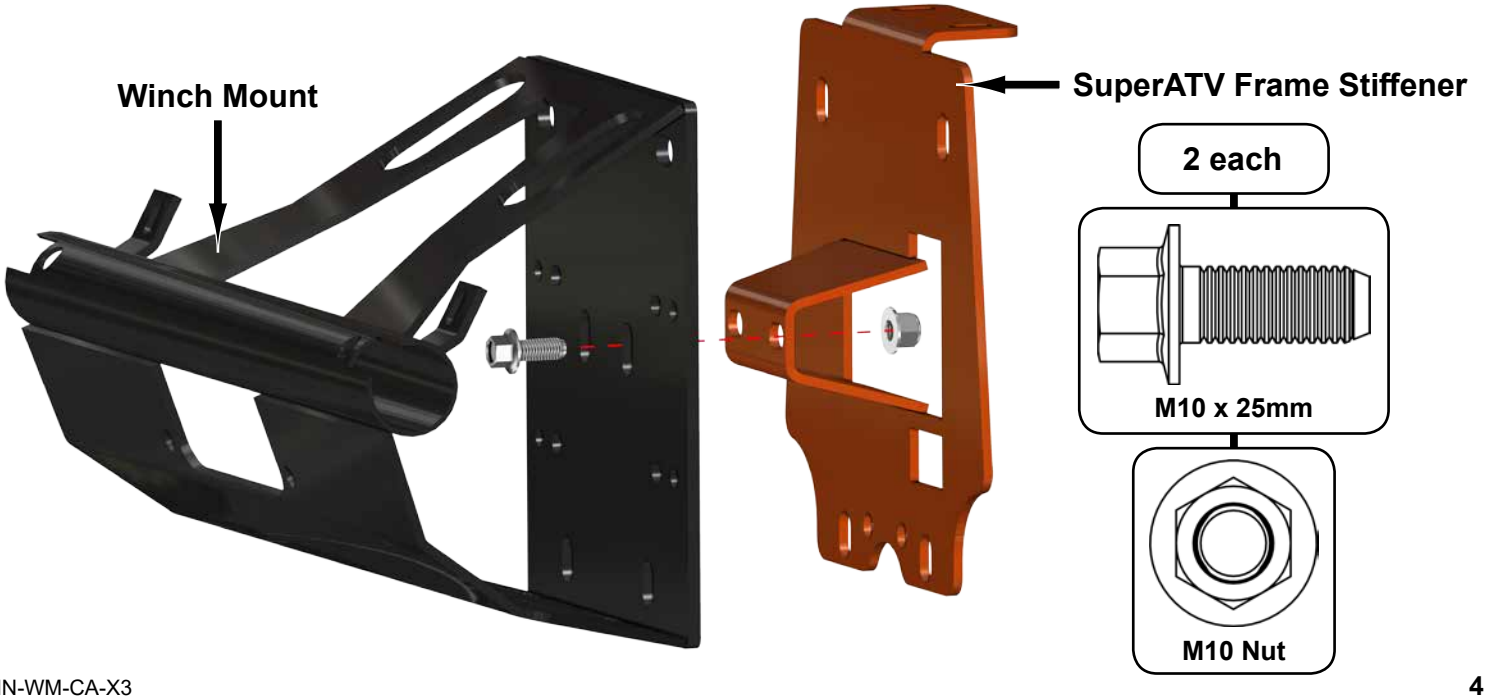

- Install Fairlead to Winch Mount.
- Fairlead and hardware included with Winch.
- Install Clip Nuts to Winch Mount.

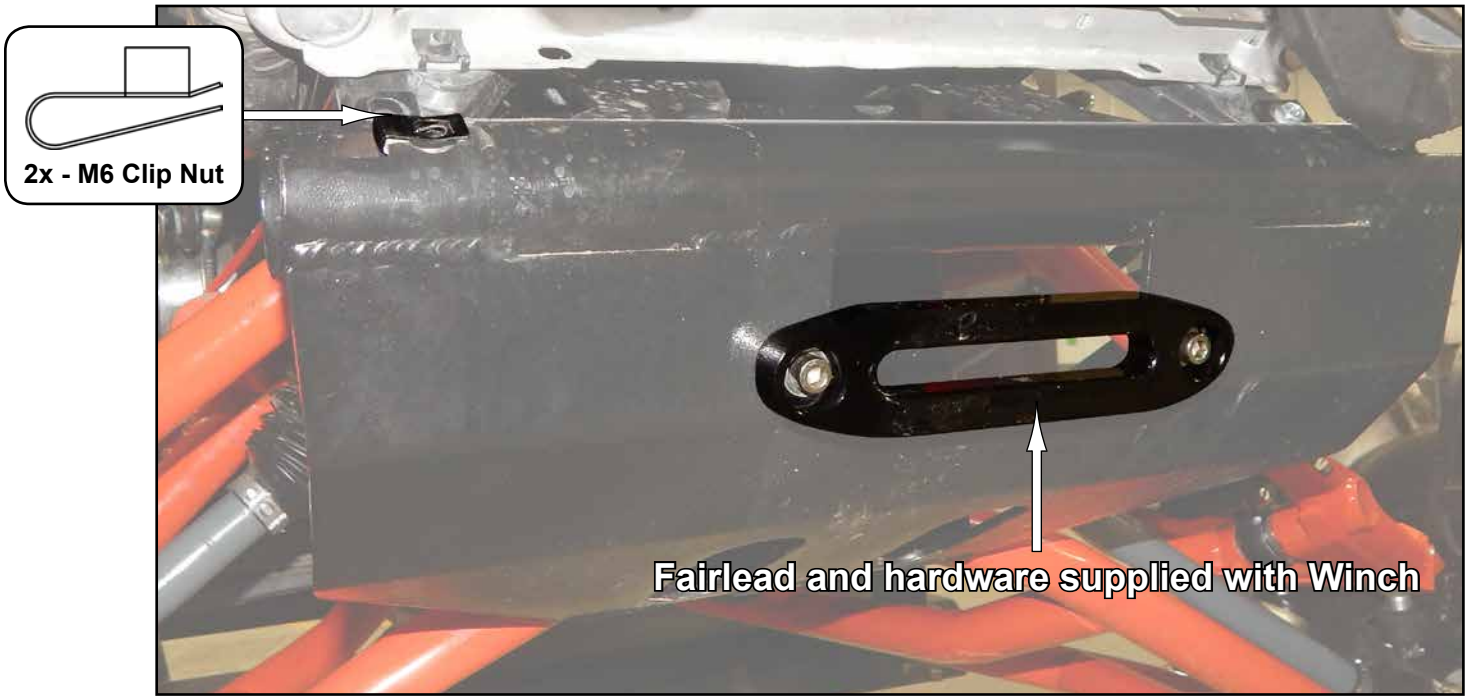

- SuperATV 3500 Lb. Winch will require installation of Fairlead Adapter as shown.

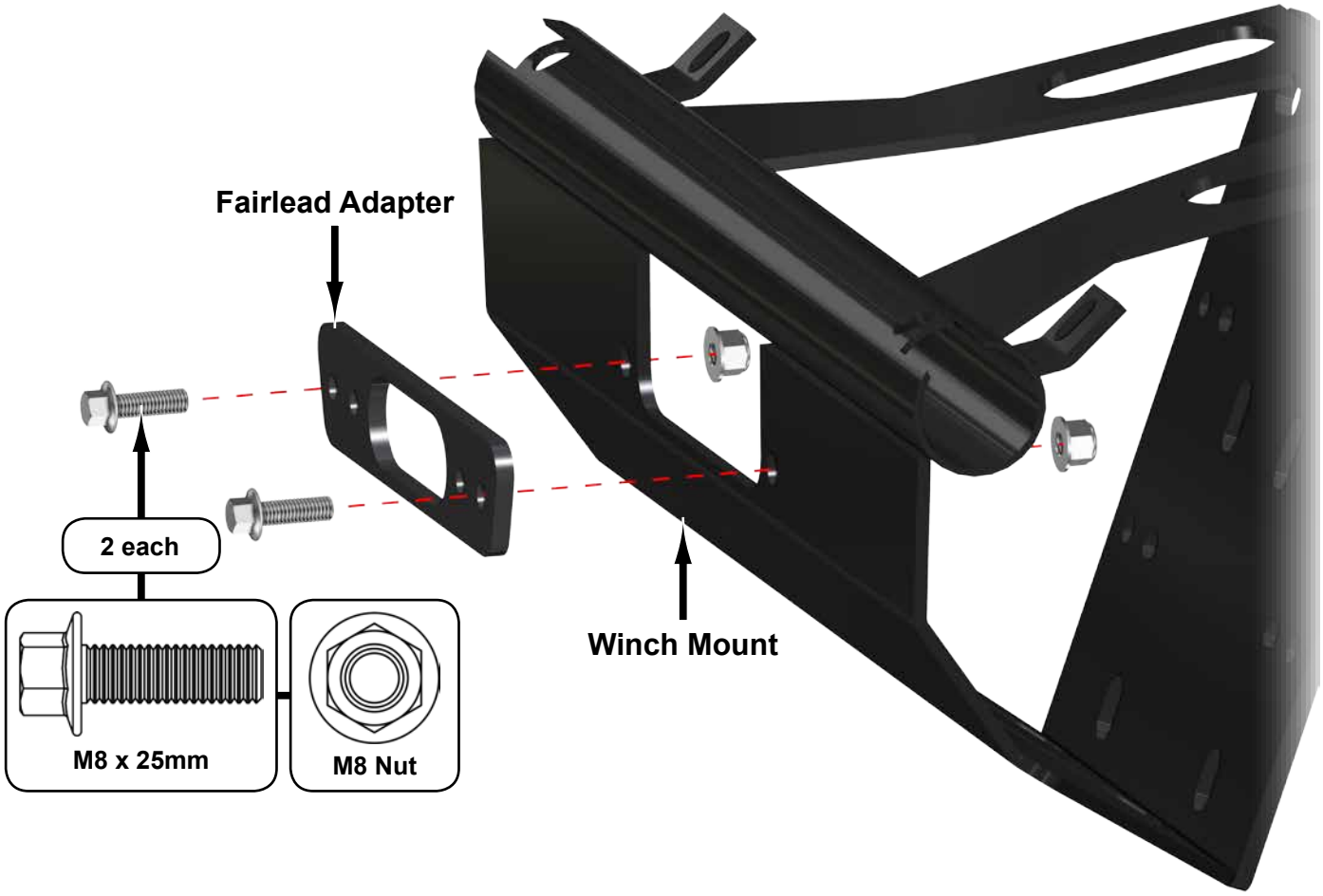

- Install Winch to Winch Mount.
- Hardware included with Winch.
- **If SuperATV FS-CA-X3-001 Frame Stiffener is installed, secure Winch with provided M8 x 30mm 10.9 bolts**

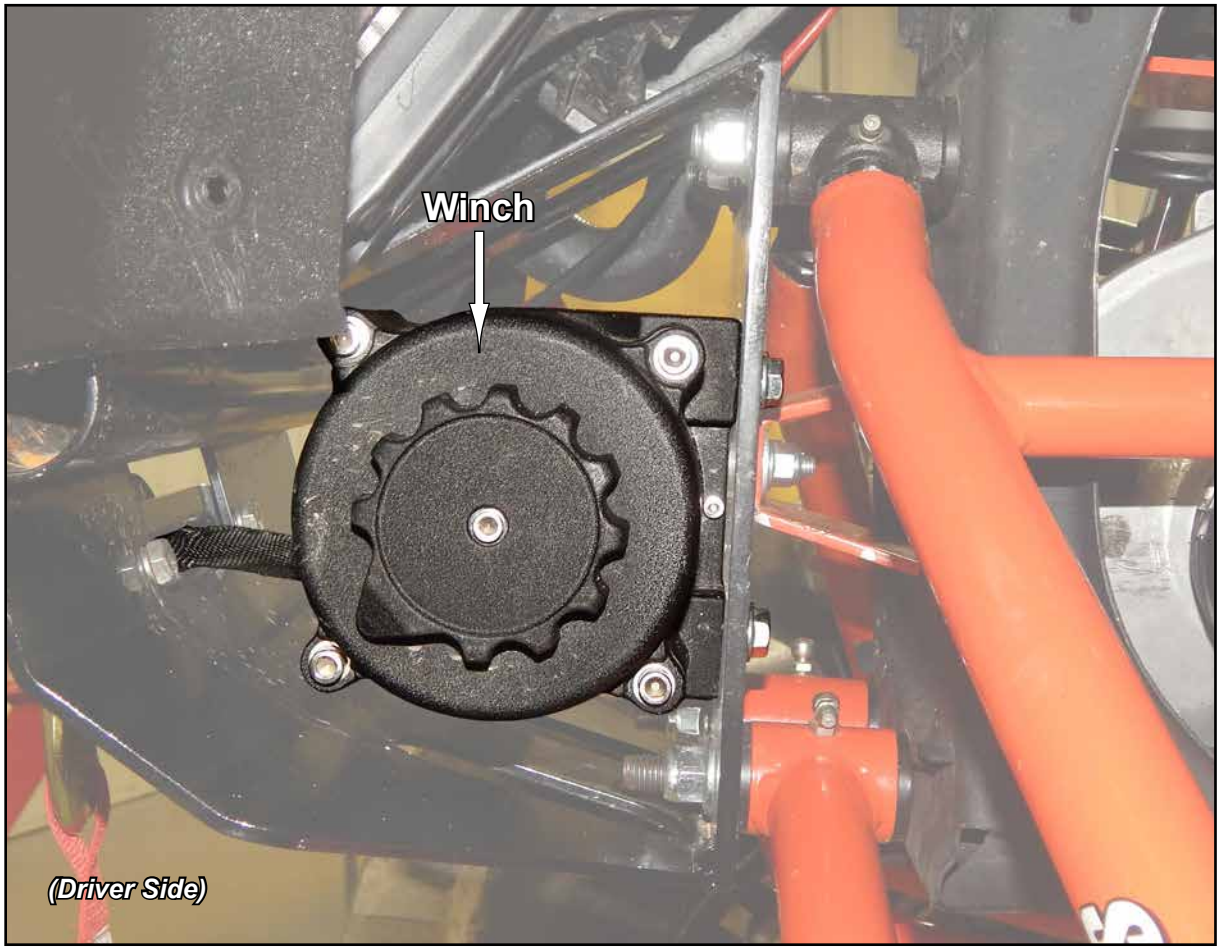

- Tighten all hardware completely.

RADIATOR SHROUD MUST BE REINSTALLED TO LOCATION SHOWN

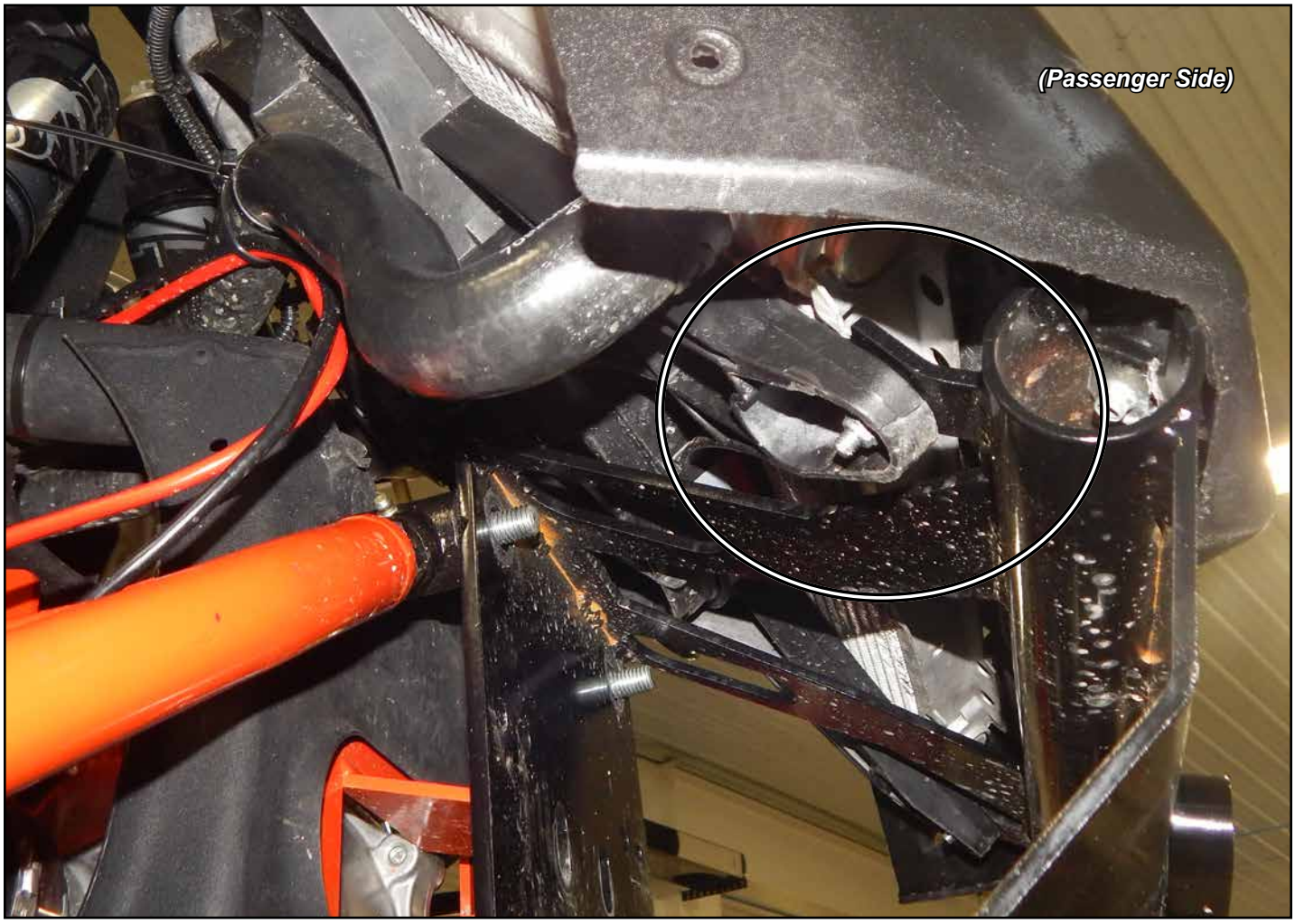

- Secure Front Fascia to Winch Mount with hardware shown.

