2753 Michigan Road • Madison, Indiana 47250 • 855-743-3427

Prop Shafts Orientations

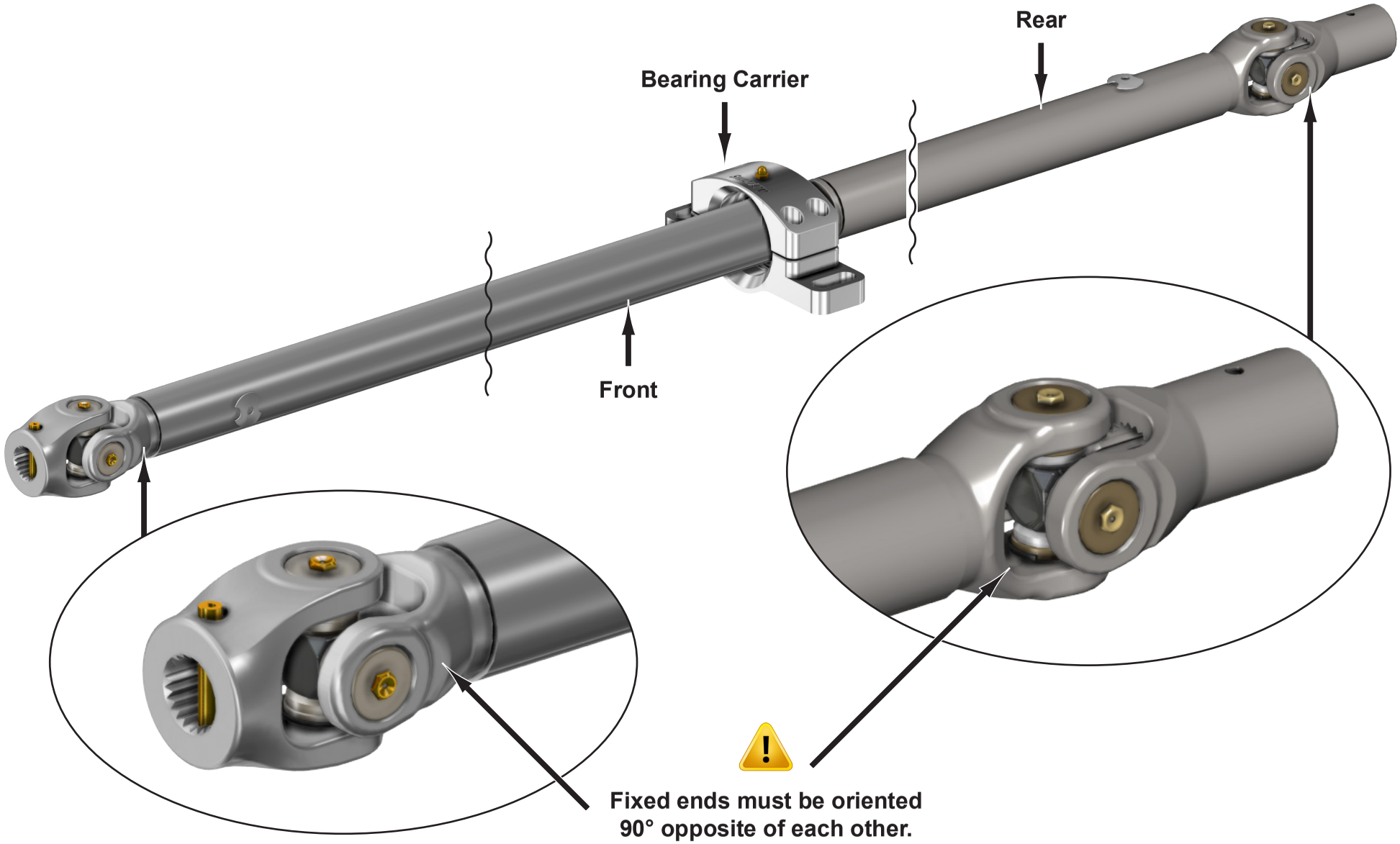

© 2018 SuperATV.com®. All Rights Reserved.