2753 Michigan Road • Madison, Indiana 47250 • 855-743-3427

INSTALLATION INSTRUCTIONS

Prop Shaft: for multiple Can-Am Defender models

- Do not discard packaging until product has been successfully installed.
- For certain models, SuperATV Prop Shaft will replace stock Front Prop Shaft, Carrier Bearing, and Rear Prop Shaft.
- Machine is shown on its side for clarity only.
- SKU PRP07-001F-0 shown.

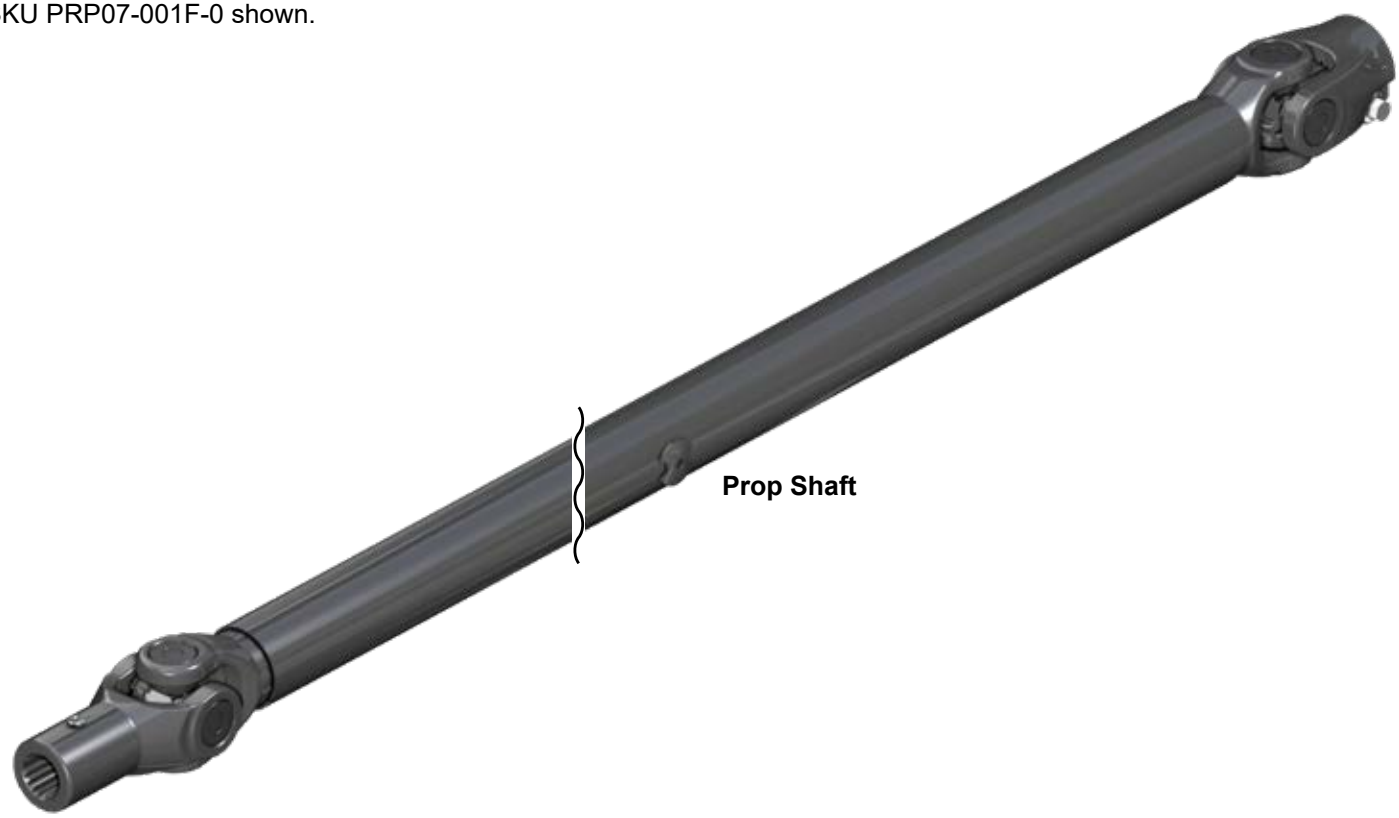

Liability Statement

SuperATV's® products are designed to best fit user's ATV/UTV under stock conditions. Adding, modifying, or fabricating any factory or aftermarket parts will void any warranty provided by SuperATV® and is not recommended. SuperATV's® products could interfere with other aftermarket accessories. If user has aftermarket products on machine, contact SuperATV® to verify that they will work together.

Although SuperATV® has thousands of satisfied customers, user should be aware that installing lift kits, long travel, or suspension kits, tires, etc. will change the ride of machine and may increase maintenance and part wear. Operating any off-road machine while, or after, consuming alcohol and/or drugs increases risk of bodily harm or death. No warranty or representation is made as to this product's ability to protect user from severe injury or death. SuperATV® urges operators and occupants to wear a helmet and appropriate riding gear at all times.

By purchasing and installing SuperATV® products, user agrees that should damages occur, SuperATV® will not be held responsible for loss of time, use, labor fees, replacement parts, or freight charges. SuperATV®, nor any 3rd party, will not be held responsible for any direct, indirect, incidental, special, or consequential damages that result from any product purchased from SuperATV®. The total liability of seller to user for all damages, losses, and causes of action, if any, shall not exceed the total purchase price paid for the product that gave rise to the claim.

SuperATV® will warranty only parts provided by SuperATV®. Any damage or problems with OEM housings, bearings, seals, or other manufacturers' products will not be covered by SuperATV®. SuperATV® parts and products are not warrantied if item was not installed properly, misused, or modified.

Installing, adding, modifying, or fabricating any factory or aftermarket product to your ATV/UTV may violate certain local, state, and federal laws. Be advised that laws vary depending on town, city, county, state, etc. Use of certain products on public streets, roads, or highways may be in violation law. The Buyer is solely and exclusively legally and personally responsible for any violation of the law by the installation or use of the product. You must abide by all local, state, and federal laws, including but not limited to vehicle safety, traffic laws, and ordinances. It is your responsibility to know the laws and how they apply to you.

The Buyer is responsible to fully understand the capability and limitations of his/her vehicle according to manufacturer specifications, warnings and instructions and agrees to hold SuperATV® harmless from any damage resulting from failure to adhere to such specifications, warnings and/ or instructions. The Buyer is also responsible to obey all applicable federal, state, and local laws and ordinances when operating his/her vehicle while using this product, and the Buyer agrees to hold SuperATV® harmless from any violation thereof.

Need help with your installation?

sales@superatv.com

www.superatv.com

1-855-743-3427

8:00am - 8:00pm EST M-Th
8:00am - 7:00pm EST Friday
9:00am - 2:00pm EST Saturday

Read instructions and view illustrations before beginning.

Thank You For Choosing SUPERATV.COM®

© 2021 SuperATV.com®. All Rights Reserved.

- Remove stock Skid Plate shown; Stock Plate is held in place with rivets.

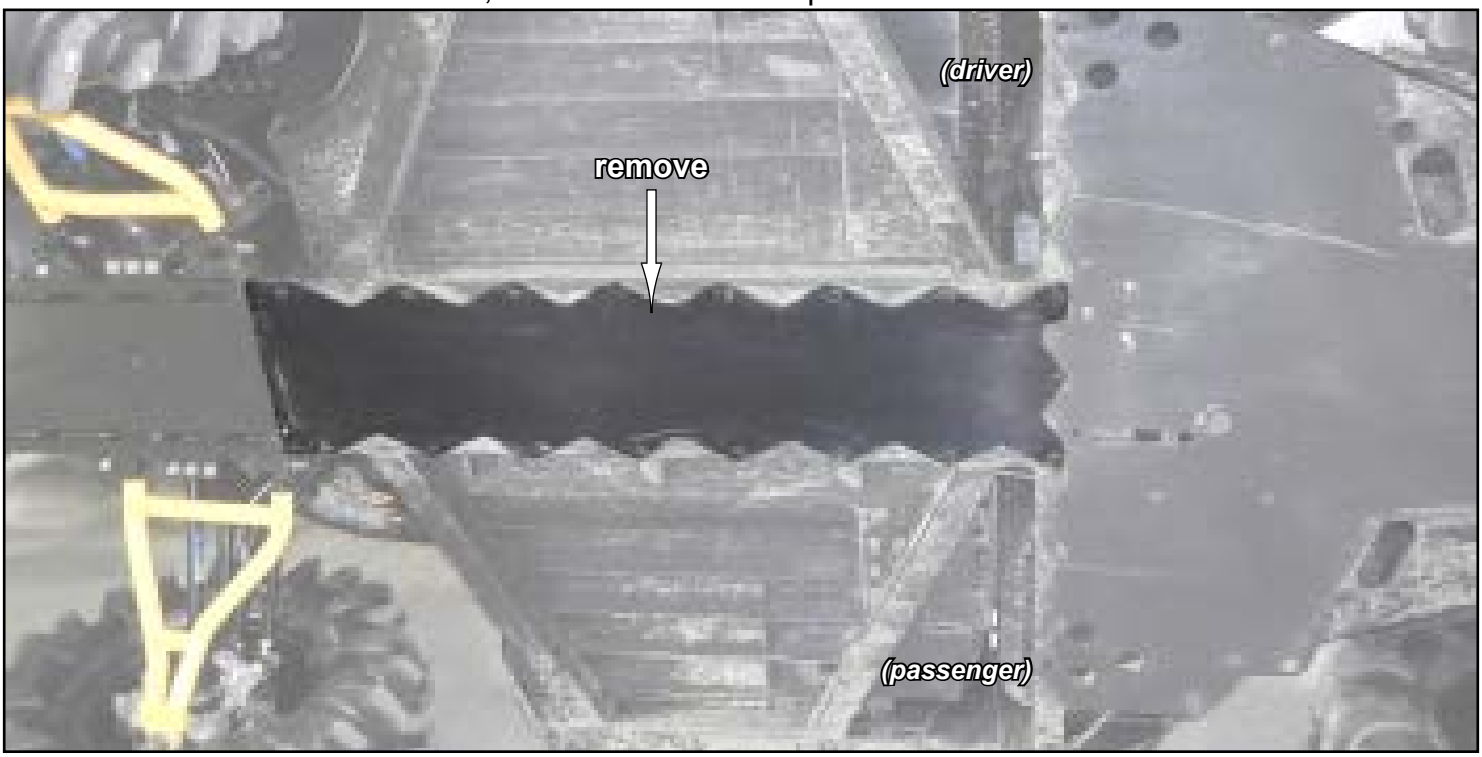

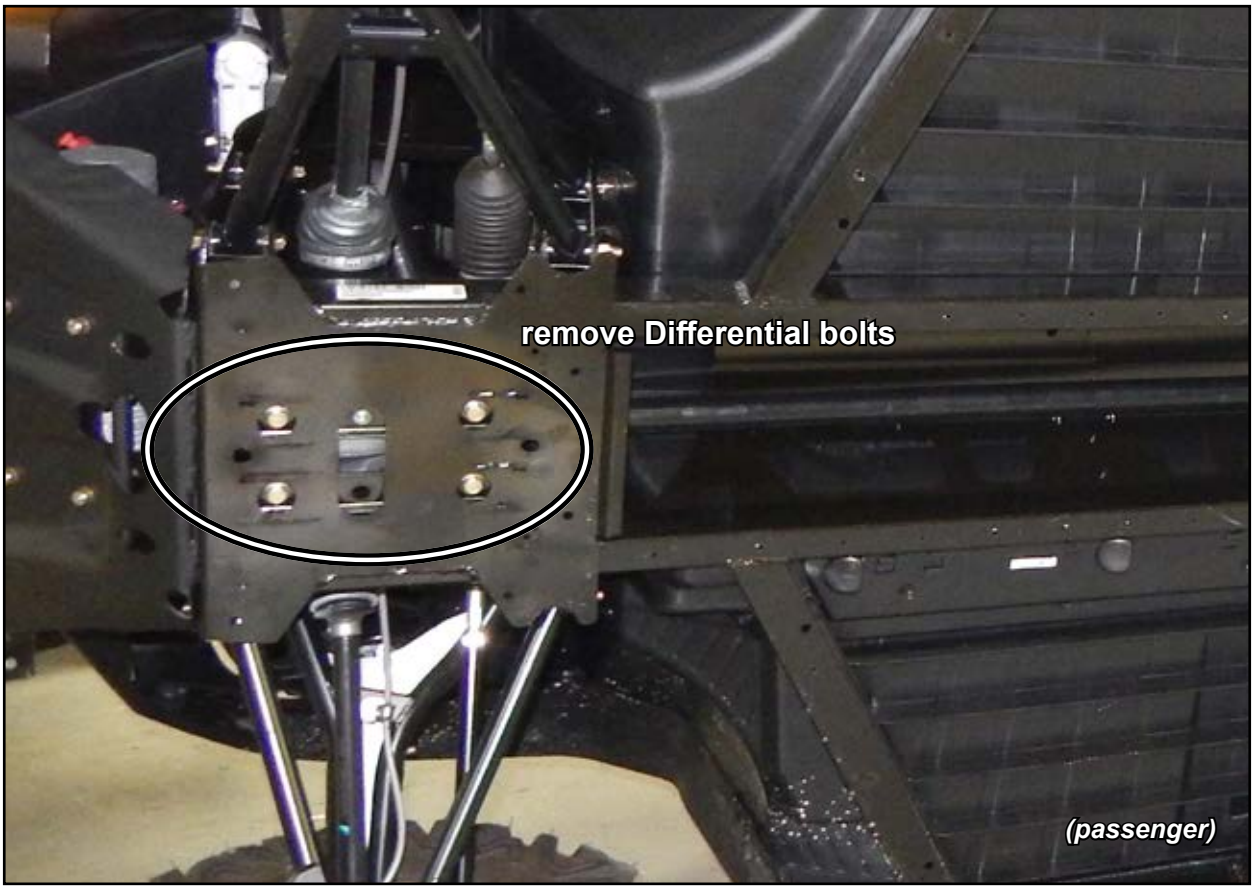

- Remove hardware from both ends of stock Shaft.
- Slide Differential forward and separate Shaft from Transmission.
- Separate Shaft from Differential.
- Install new Prop Shaft to Transmission and Differential; use provided hardware.
- Place Differential back into position and resecure.
- Reinstall Skid Plate.

2753 Michigan Road • Madison, Indiana 47250 • 855-743-3427

INSTALLATION INSTRUCTIONS

Prop Shaft: for multiple Can-Am Defender models

- Do not discard packaging until product has been successfully installed.
- Machine is shown on its side for clarity only.



Liability Statement

SuperATV's® products are designed to best fit user's ATV/UTV under stock conditions. Adding, modifying, or fabricating any factory or aftermarket parts will void any warranty provided by SuperATV® and is not recommended. SuperATV's® products could interfere with other aftermarket accessories. If user has aftermarket products on machine, contact SuperATV® to verify that they will work together.

Although SuperATV® has thousands of satisfied customers, user should be aware that installing lift kits, long travel, or suspension kits, tires, etc. will change the ride of machine and may increase maintenance and part wear. Operating any off-road machine while, or after, consuming alcohol and/or drugs increases risk of bodily harm or death. No warranty or representation is made as to this product's ability to protect user from severe injury or death. SuperATV® urges operators and occupants to wear a helmet and appropriate riding gear at all times.

By purchasing and installing SuperATV® products, user agrees that should damages occur, SuperATV® will not be held responsible for loss of time, use, labor fees, replacement parts, or freight charges. SuperATV®, nor any 3rd party, will not be held responsible for any direct, indirect, incidental, special, or consequential damages that result from any product purchased from SuperATV®. The total liability of seller to user for all damages, losses, and causes of action, if any, shall not exceed the total purchase price paid for the product that gave rise to the claim.

SuperATV® will warranty only parts provided by SuperATV®. Any damage or problems with OEM housings, bearings, seals, or other manufacturers' products will not be covered by SuperATV®. SuperATV® parts and products are not warrantied if item was not installed properly, misused, or modified.

Installing, adding, modifying, or fabricating any factory or aftermarket product to your ATV/UTV may violate certain local, state, and federal laws. Be advised that laws vary depending on town, city, county, state, etc. Use of certain products on public streets, roads, or highways may be in violation law. The Buyer is solely and exclusively legally and personally responsible for any violation of the law by the installation or use of the product. You must abide by all local, state, and federal laws, including but not limited to vehicle safety, traffic laws, and ordinances. It is your responsibility to know the laws and how they apply to you.

The Buyer is responsible to fully understand the capability and limitations of his/her vehicle according to manufacturer specifications, warnings and instructions and agrees to hold SuperATV® harmless from any damage resulting from failure to adhere to such specifications, warnings and/ or instructions. The Buyer is also responsible to obey all applicable federal, state, and local laws and ordinances when operating his/her vehicle while using this product, and the Buyer agrees to hold SuperATV® harmless from any violation thereof.

Need help with your installation?

sales@superatv.com

www.superatv.com

1-855-743-3427

8:00am - 8:00pm EST M-Th
8:00am - 7:00pm EST Friday
9:00am - 2:00pm EST Saturday

Read instructions and view illustrations before beginning.

Thank You For Choosing

© 2021 SuperATV.com®. All Rights Reserved.

Rev IN-PRP07-001R-0 7/15/2024

- Remove stock Skid Plates shown; Stock Plates are held in place with rivets.

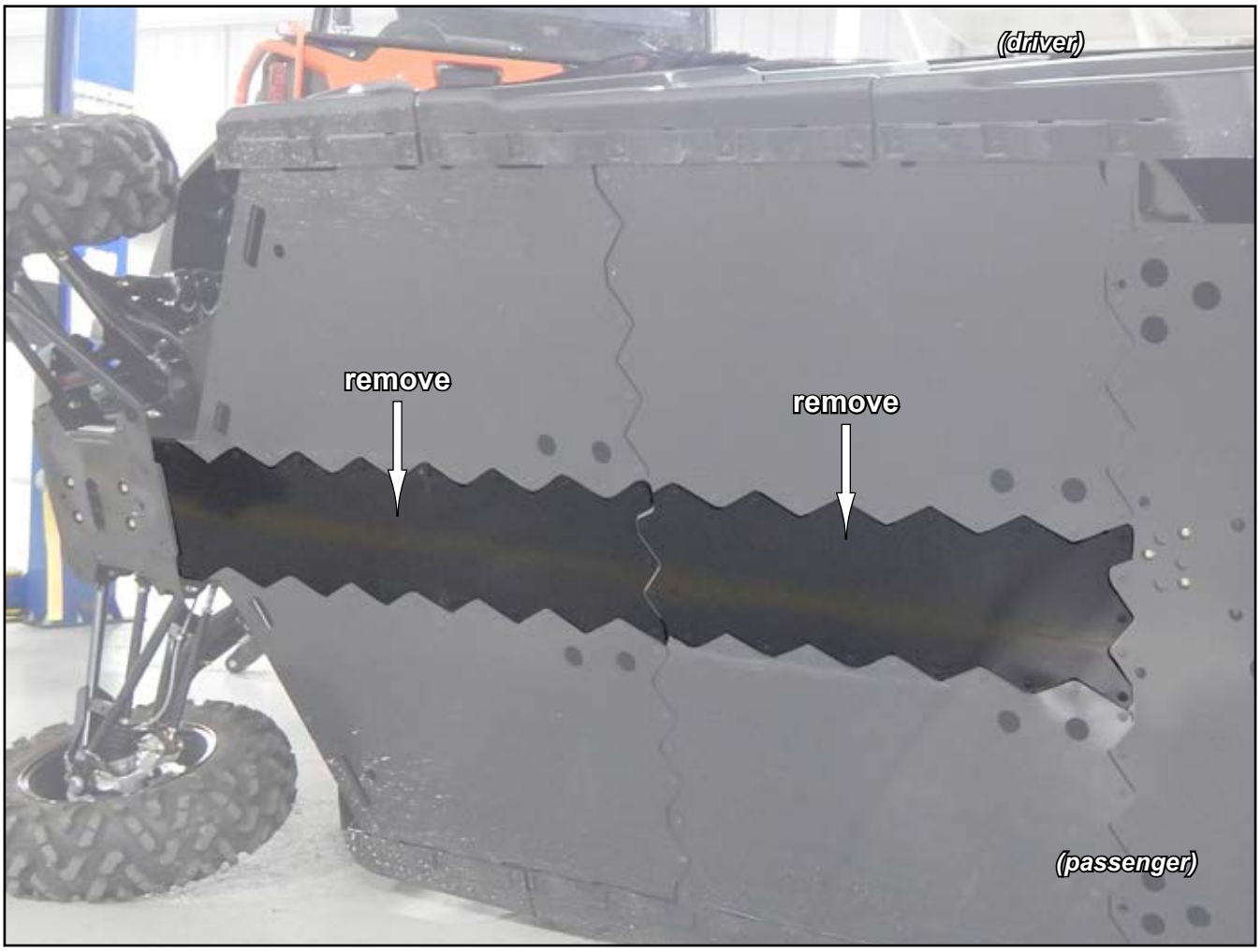

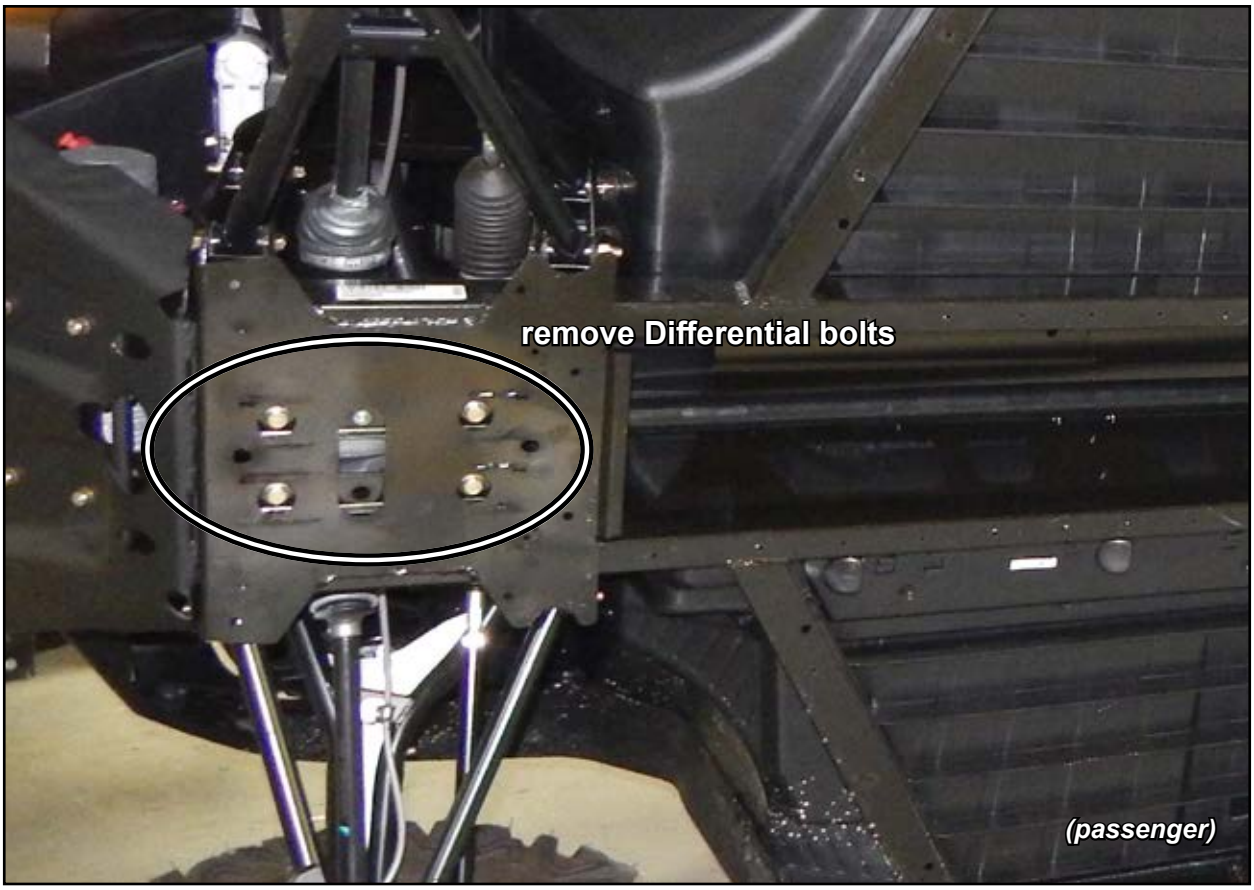

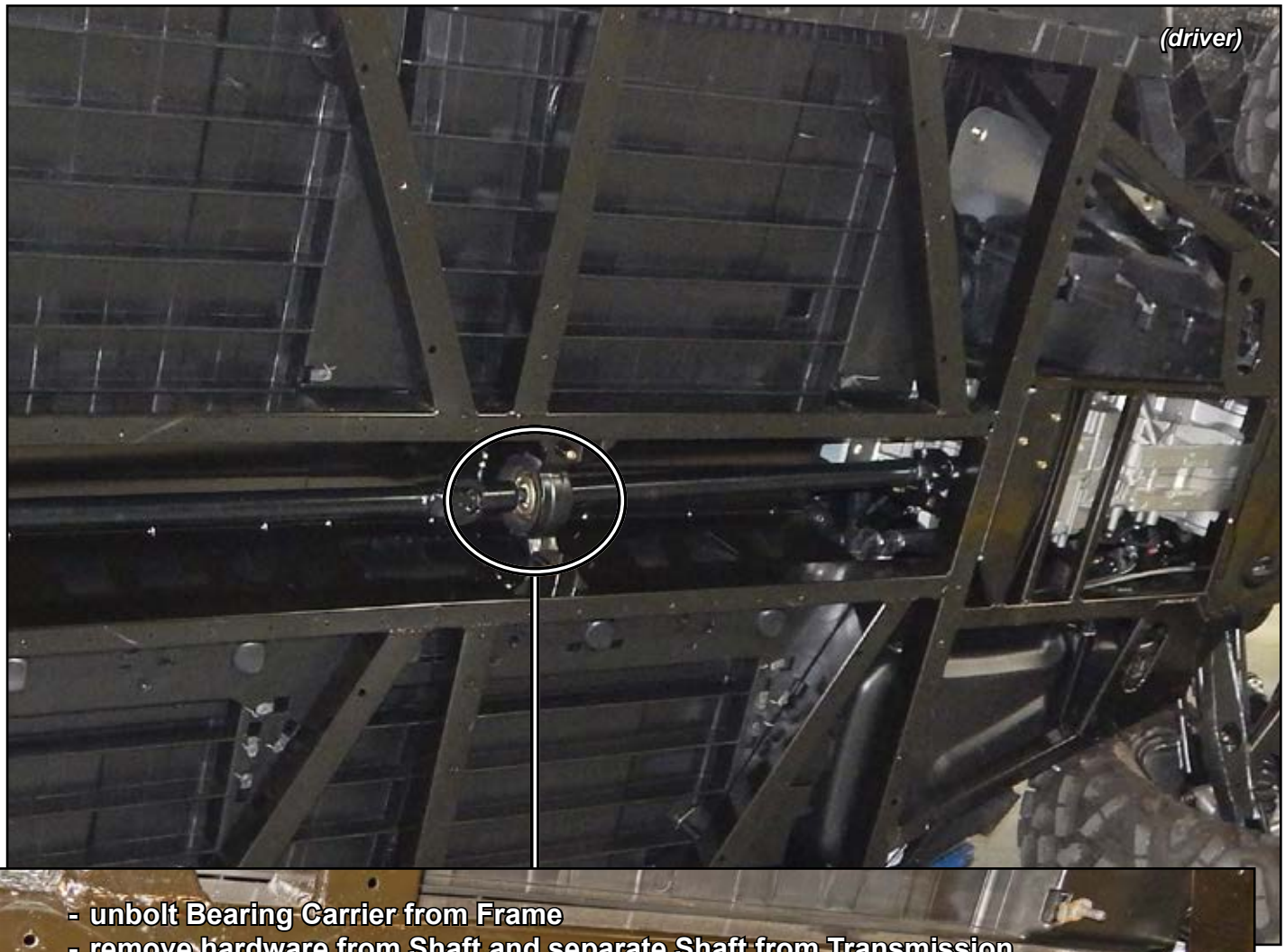
(driver)

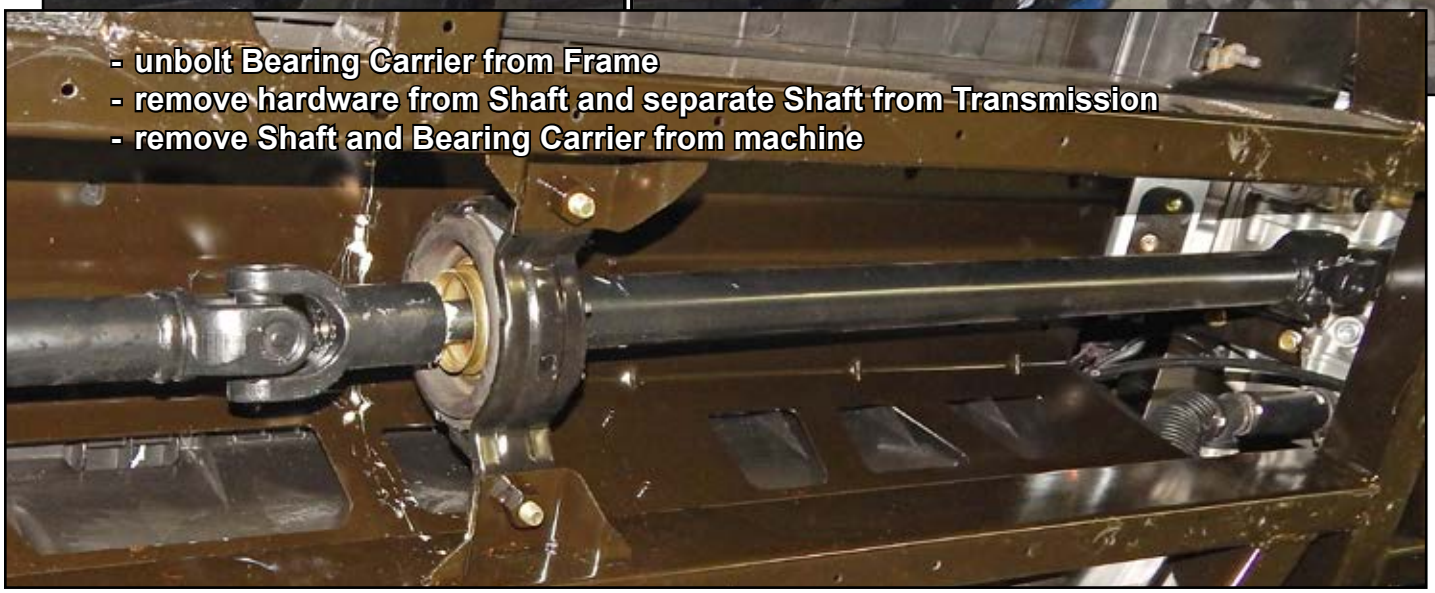
- unbolt Bearing Carrier from Frame
- remove hardware from Shaft and separate Shaft from Transmission
- remove Shaft and Bearing Carrier from machine

- Apply Instant Bonding Adhesive to Isolators in highlighted area.
- Clamp Isolators to Carrier Bearing Bottom.
- **Instant Bonding Adhesive must cure for 24 hours.**

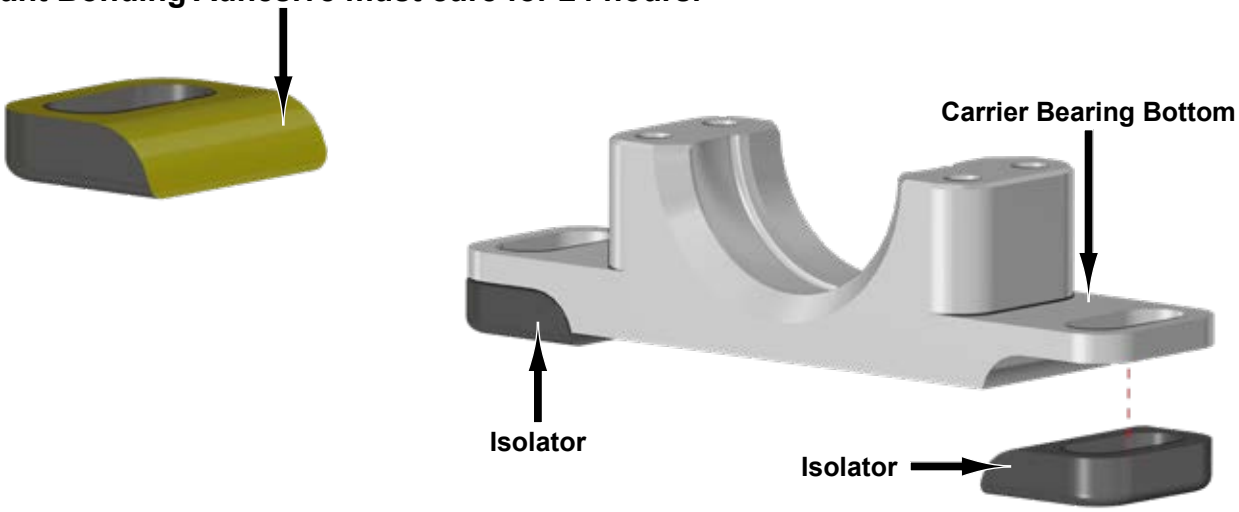

- Completely clean off all oil, grease, or dirt on Rear Prop in highlighted area.
- Completely clean oil from seating area of Carrier Bearing.
- Apply supplied green retaining compound to highlighted area.
- Install new Bearing and tighten Set Screw.
- **Must cure 24 hours before next step.**

- **Grease Ring to always face center of Bearing Carrier.**
- **Grease Ring to be in-line with Top and Bottom pieces.**

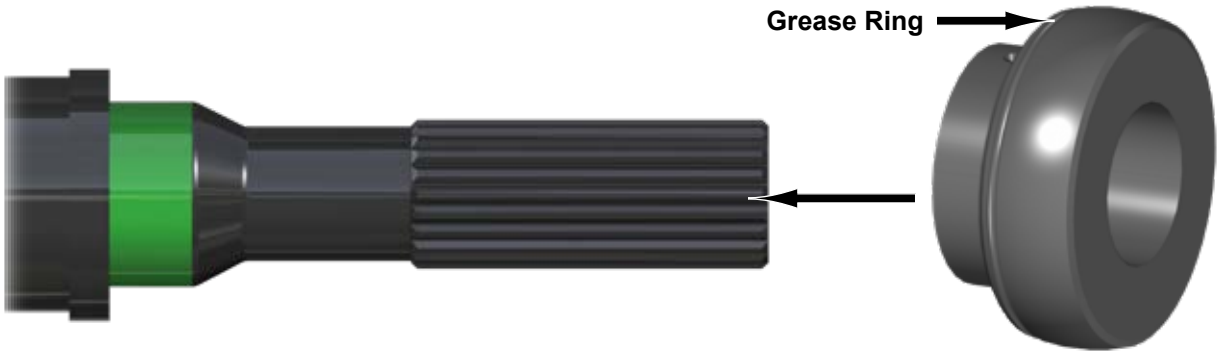

- Install Bottom to Frame with hardware shown.
- Install new Prop Shaft to Transmission; use provided hardware.

See “Positioning” and “Prop Shafts Orientation”.



- Place Shaft into Carrier Bearing and reconnect Front Shaft.
- Install Top to Bottom; use supplied blue Loc-Tite on bolts. Torque bolts to 20 ft/lbs.
- Pump 4 to 5 shots of Grease into Carrier Bearing.
- Reinstall Skid Plates

“Positioning”

- Depending on model, Bottom may need to be moved forward or rearward.
- Dimension “A” ***must always be equal*** regardless of where Bottom is positioned.

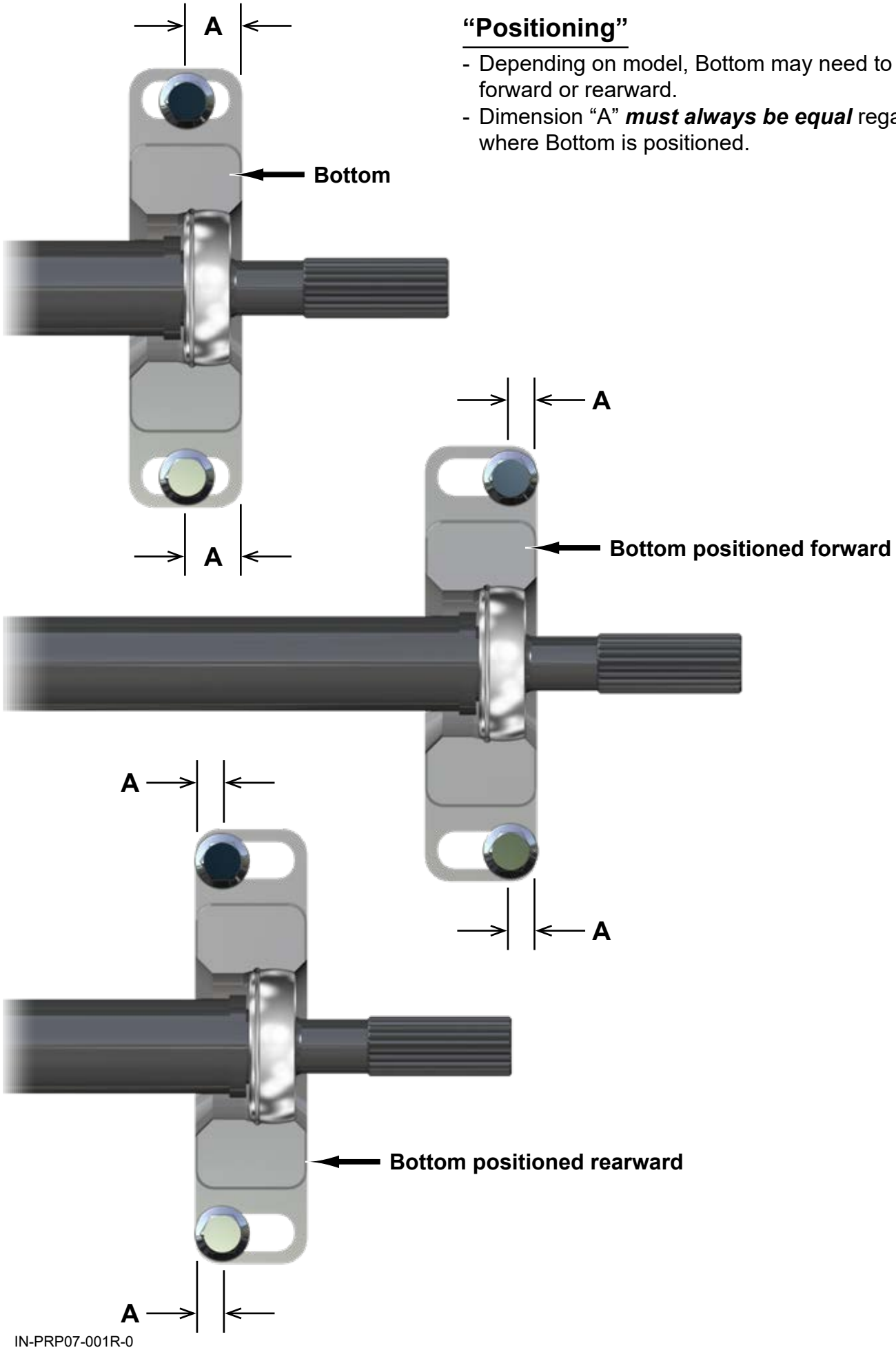

“Prop Shafts Orientations”

