2753 Michigan Road • Madison, Indiana 47250 • 855-743-3427

INSTALLATION INSTRUCTIONS

Power Steering Kit

for Polaris Ranger® 1000

Item	Description
B	Mounting Bracket
C	Lower Shaft
D	Steering Shaft
M	ECU Mount
N	Mounting Bracket Support

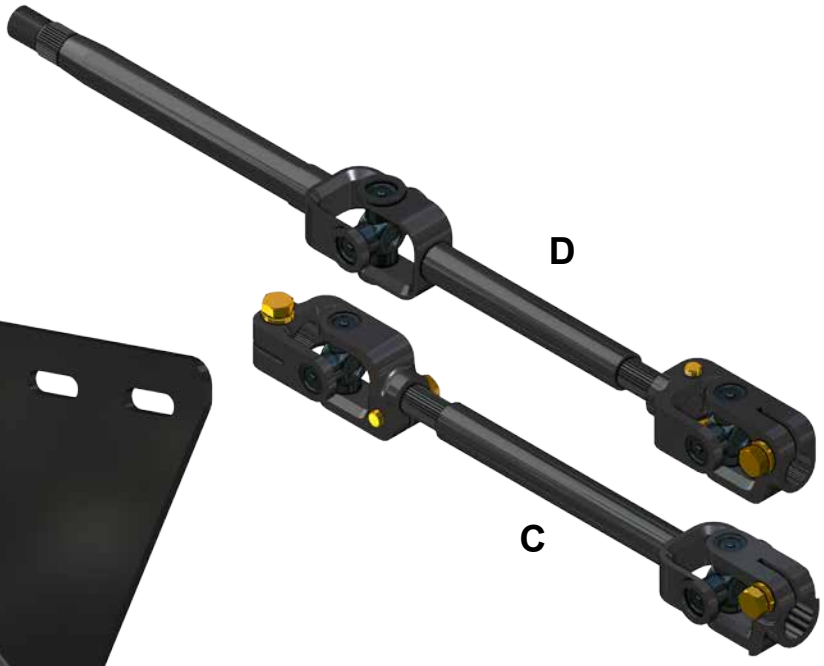

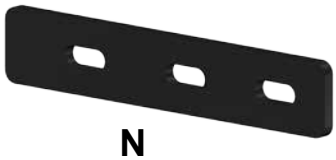

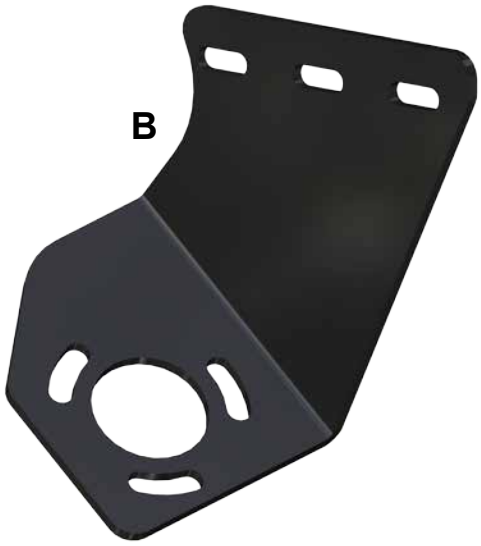



(Kit Contents continue on following page)



Harness Plug

Liability Statement

SuperATV's® products are designed to best fit user's ATV/UTV under stock conditions. Adding, modifying, or fabricating any factory or aftermarket parts will void any warranty provided by SuperATV® and is not recommended. SuperATV's® products could interfere with other aftermarket accessories. If user has aftermarket products on machine, contact SuperATV® to verify that they will work together.

Although SuperATV® has thousands of satisfied customers, user should be aware that installing lift kits, long travel, or suspension kits, tires, etc. will change the ride of machine and may increase maintenance and part wear. Operating any off-road machine while, or after, consuming alcohol and/or drugs increases risk of bodily harm or death. No warranty or representation is made as to this product's ability to protect user from severe injury or death. SuperATV® urges operators and occupants to wear a helmet and appropriate riding gear at all times.

By purchasing and installing SuperATV® products, user agrees that should damages occur, SuperATV® will not be held responsible for loss of time, use, labor fees, replacement parts, or freight charges. SuperATV®, nor any 3rd party, will not be held responsible for any direct, indirect, incidental, special, or consequential damages that result from any product purchased from SuperATV®. The total liability of seller to user for all damages, losses, and causes of action, if any, shall not exceed the total purchase price paid for the product that gave rise to the claim.

SuperATV® will warranty only parts provided by SuperATV®. Any damage or problems with OEM housings, bearings, seals, or other manufacturers' products will not be covered by SuperATV®. SuperATV® parts and products are not warrantied if item was not installed properly, misused, or modified.

Installing, adding, modifying, or fabricating any factory or aftermarket product to your ATV/UTV may violate certain local, state, and federal laws. Be advised that laws vary depending on town, city, county, state, etc. Use of certain products on public streets, roads, or highways may be in violation law. The Buyer is solely and exclusively legally and personally responsible for any violation of the law by the installation or use of the product. You must abide by all local, state, and federal laws, including but not limited to vehicle safety, traffic laws, and ordinances. It is your responsibility to know the laws and how they apply to you.

The Buyer is responsible to fully understand the capability and limitations of his/her vehicle according to manufacturer specifications, warnings and instructions and agrees to hold SuperATV® harmless from any damage resulting from failure to adhere to such specifications, warnings and/ or instructions. The Buyer is also responsible to obey all applicable federal, state, and local laws and ordinances when operating his/her vehicle while using this product, and the Buyer agrees to hold SuperATV® harmless from any violation thereof.

Need help with your installation?

sales@superatv.com

www.superatv.com

1-855-743-3427

8:00am - 8:00pm EST M-Th
8:00am - 7:00pm EST Friday
9:00am - 2:00pm EST Saturday

Read instructions and view illustrations before beginning.

Thank You For Choosing SUPERATV.COM®

© 2020 SuperATV.com®. All Rights Reserved.

*Connections

- Before installing, ensure that all Gaskets in electrical connections are properly seated.
- If Gaskets are not seated use a Flathead Screwdriver to seat.



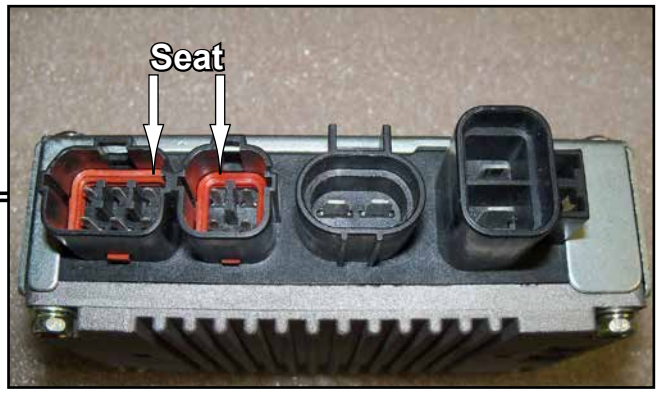

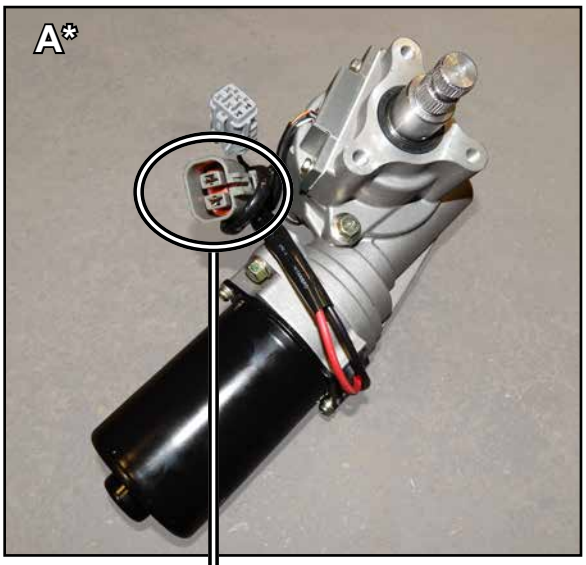

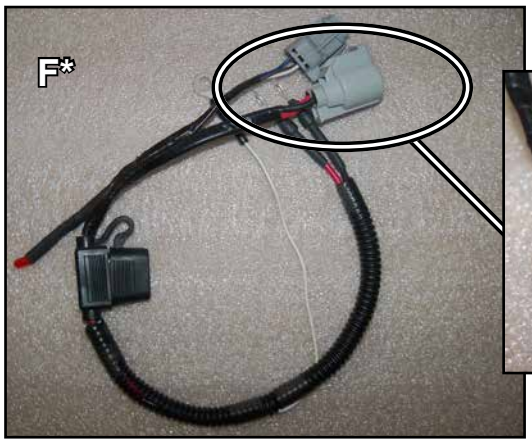



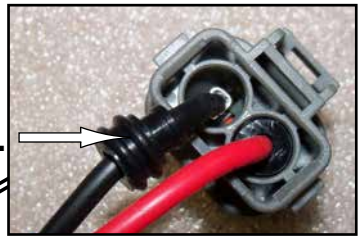

Push in....

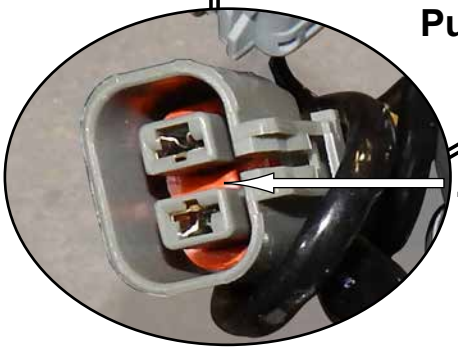

....Seat

Item	Description
E	ECU
A	Motor
F	Wire Harness

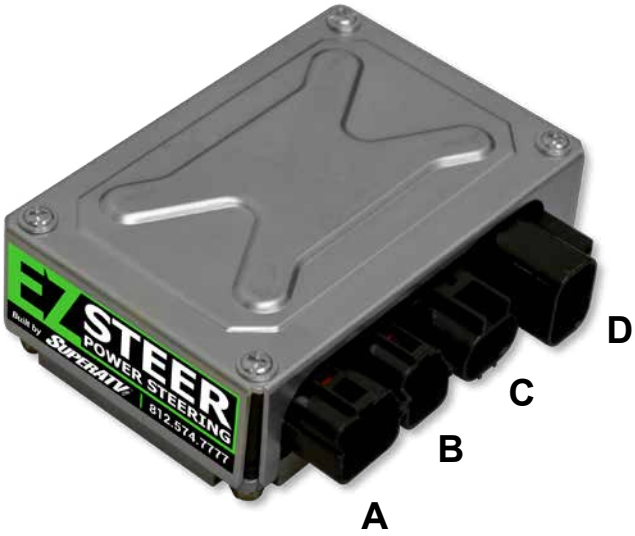

Secure in a visible location.



When activated, Diagnostic Light will flash once for about (1) second before turning off indicating proper function. Should different patterns occur, contact SuperATV.

Plug	Function	Plug	Function
A	Torque Sensor	C	Power
B	Switched 12V Source	D	Motor

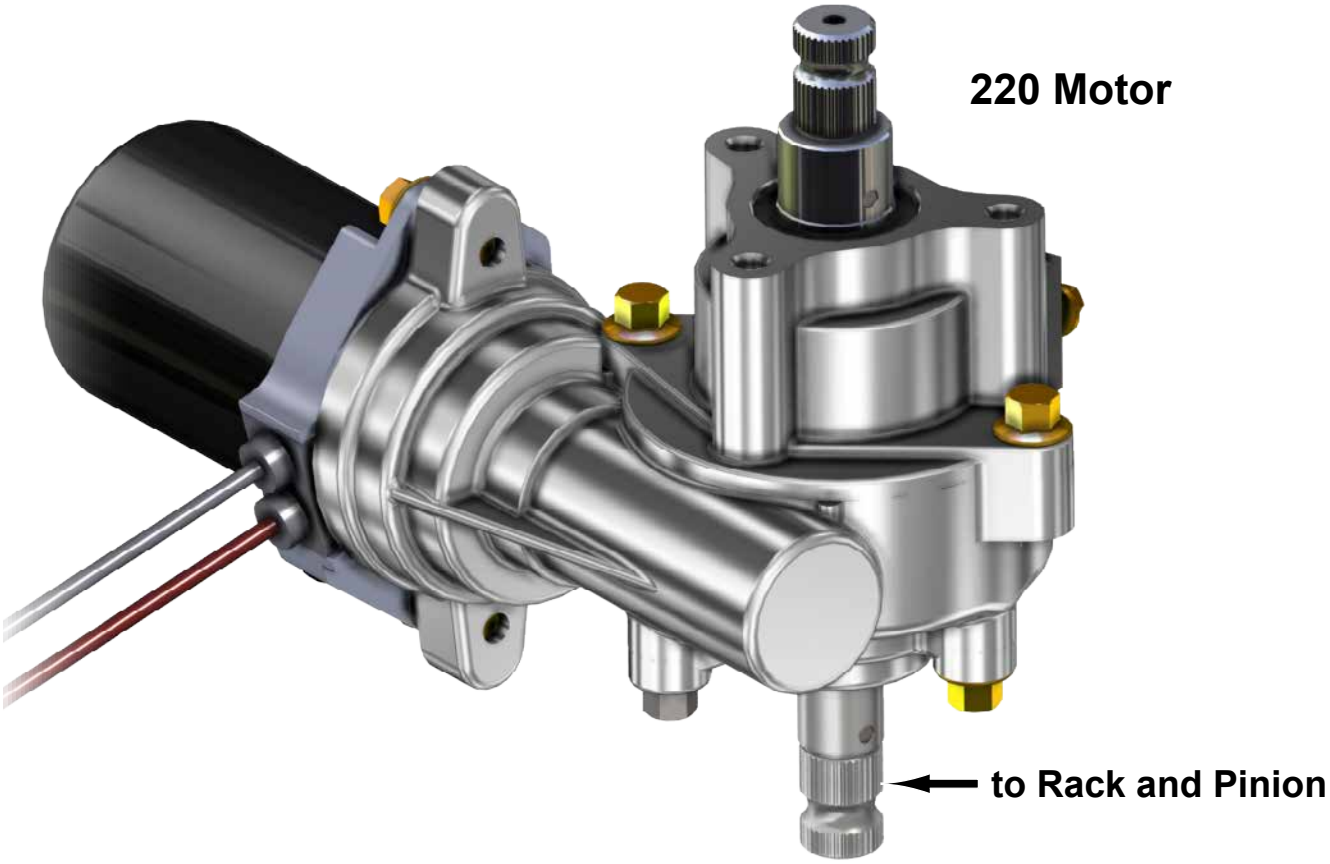
220 Motor
to Rack and Pinion

keep all stock components removed from machine





keep all stock components removed from machine

disconnect Switches that are located in Upper Dash



disconnect Switches that are located in Lower Dash



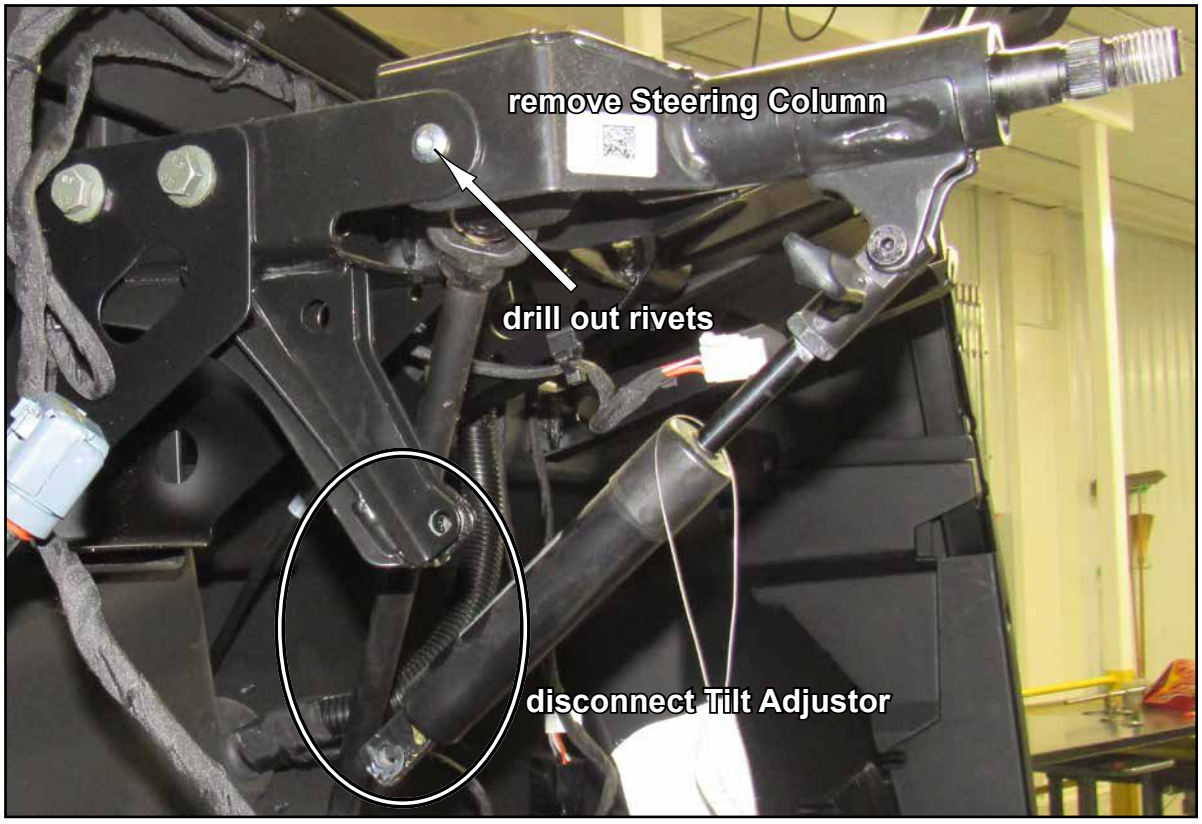

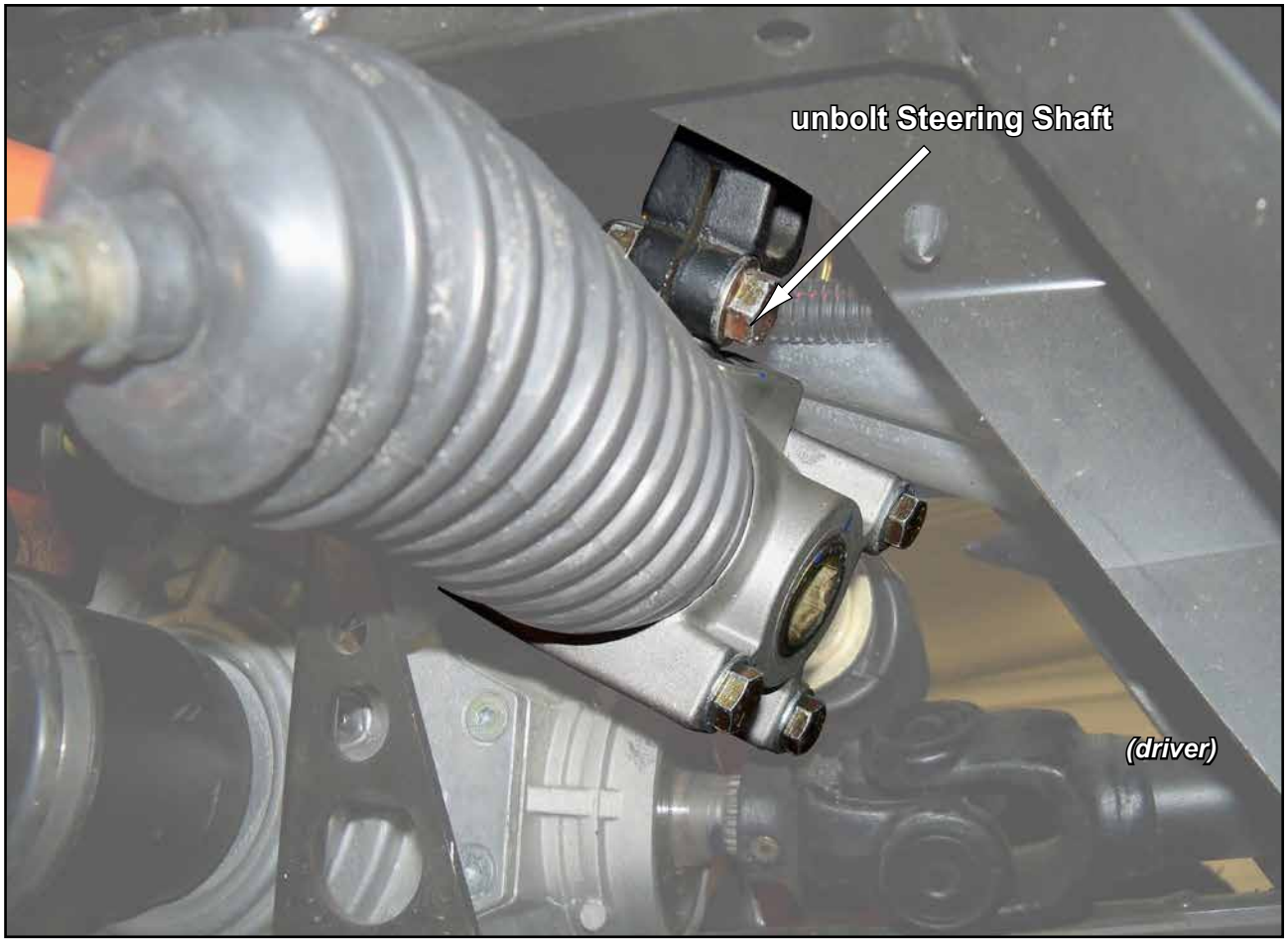
unbolt Steering Shaft
(driver)

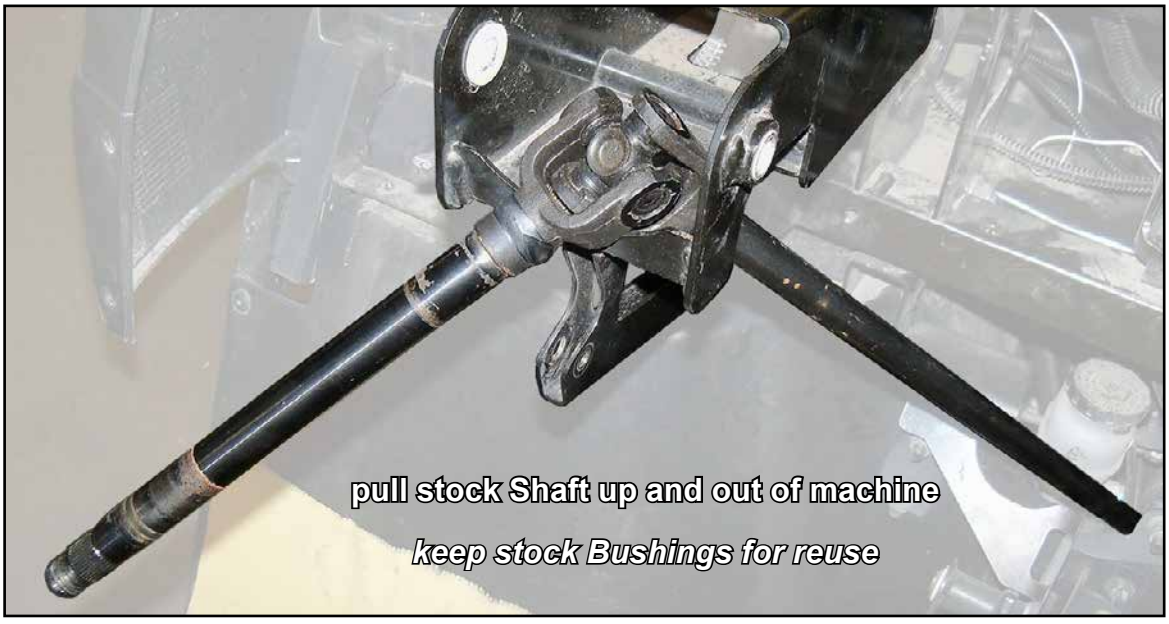
pull stock Shaft up and out of machine
keep stock Bushings for reuse

Do not tighten hardware completely unless noted.

- Insert Lower Shaft (C) through Firewall and secure to Steering Rack with stock hardware.



- Install Mounting Bracket (B) to Motor (A) with hardware shown.

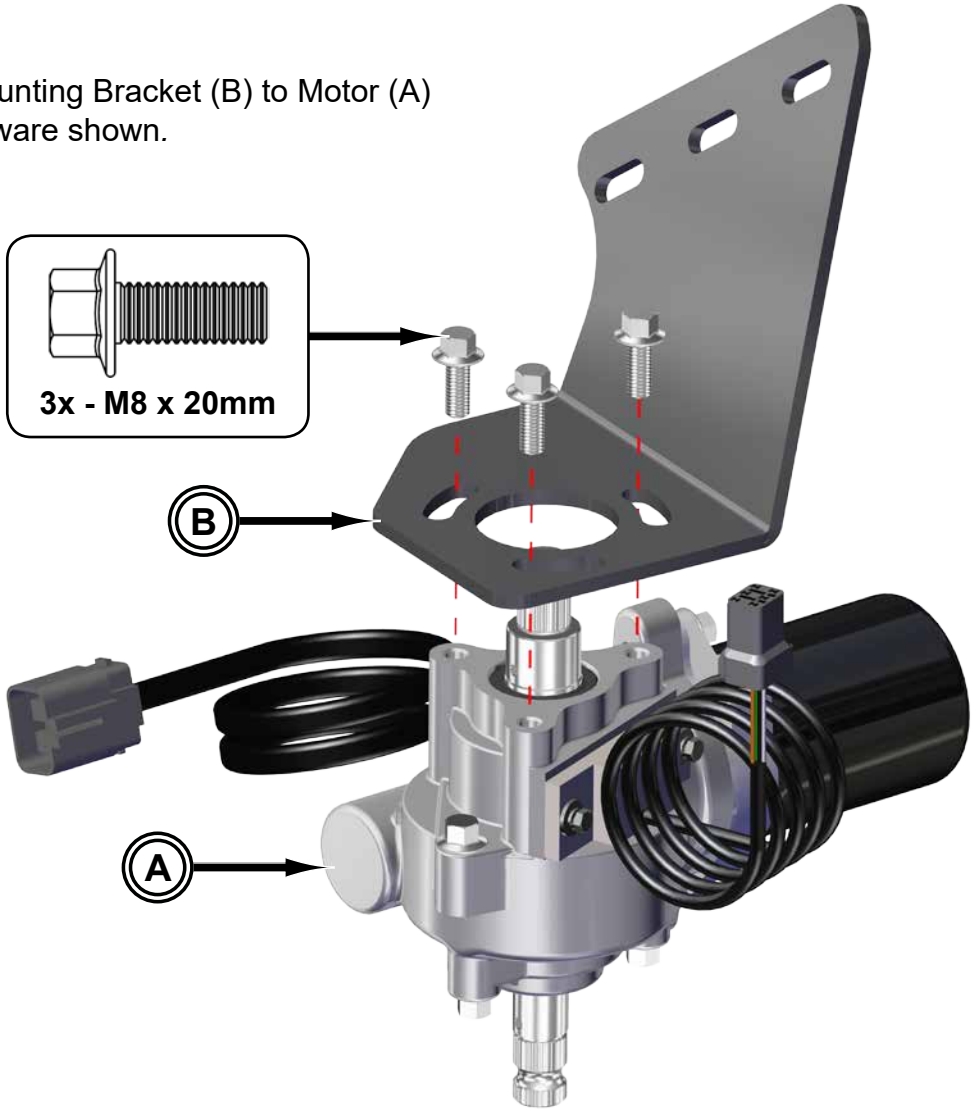

- Mounting Bracket (B) and Mounting Bracket Support (N) will mount to Frame in location shown. See following page.



- Secure Motor (A) to Lower Shaft (C).
- Secure Mounting Bracket (B) and Mounting Bracket Support (N) to Frame with hardware shown.

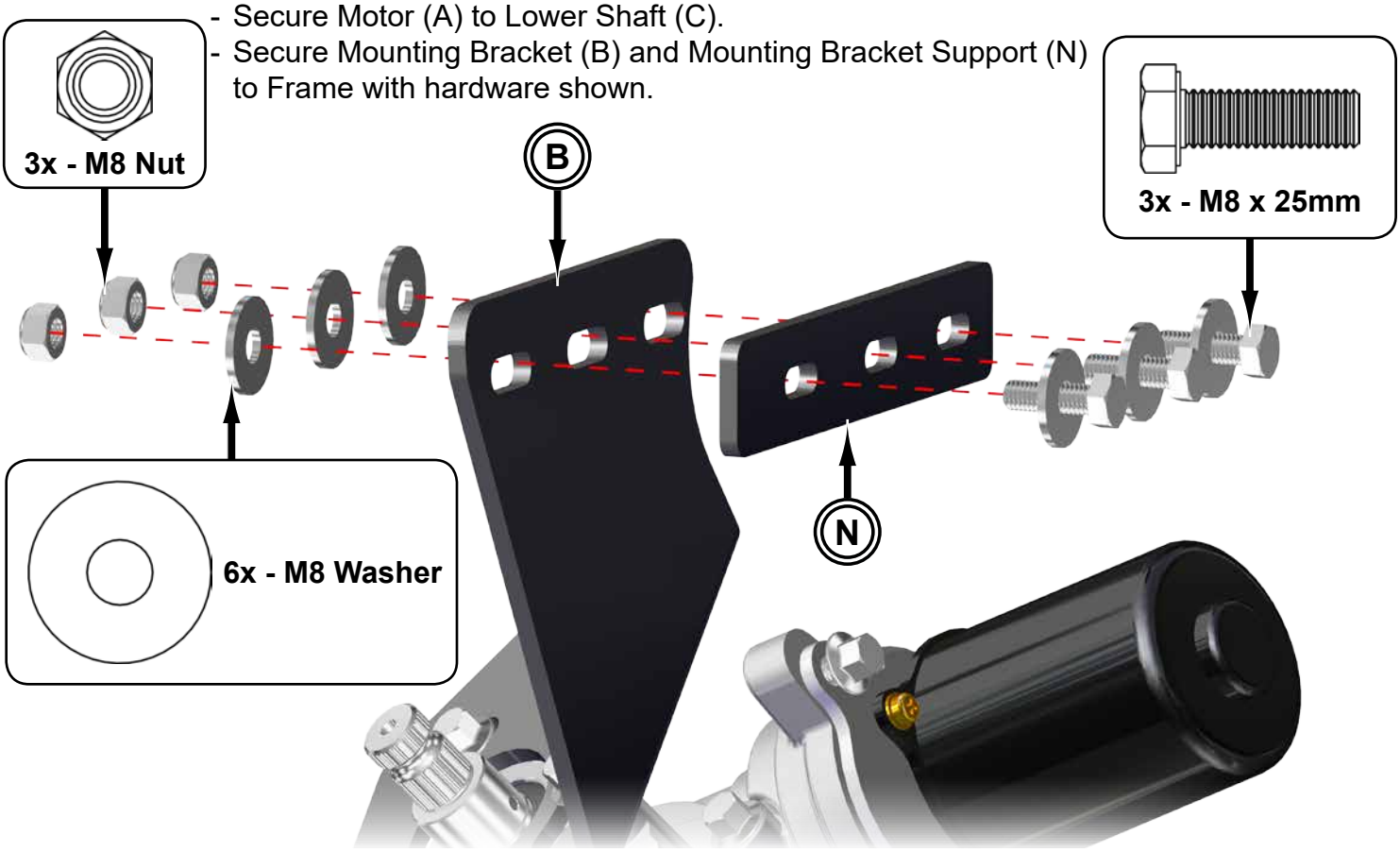

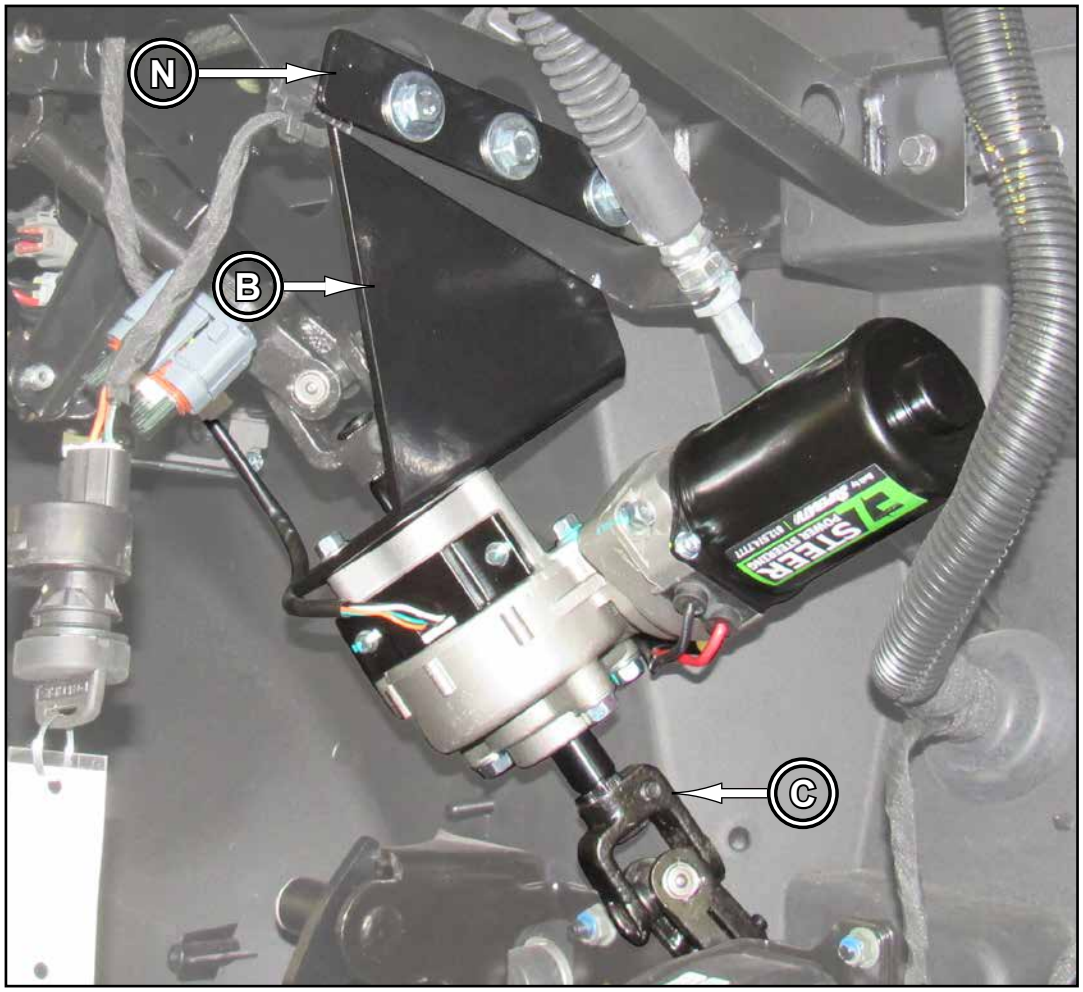

- Secure ECU (E) with hardware shown by sandwiching ECU Mount (M) to Frame.
- Install Steering Shaft (D) to Motor (A).

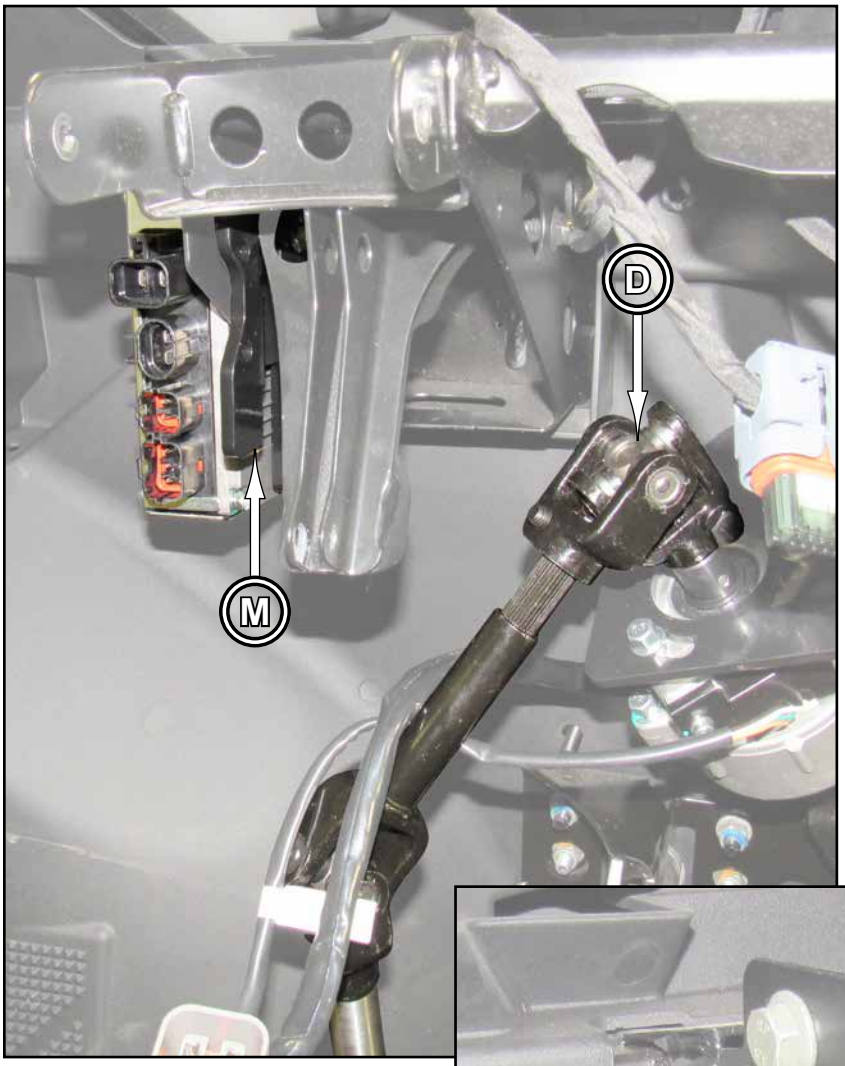

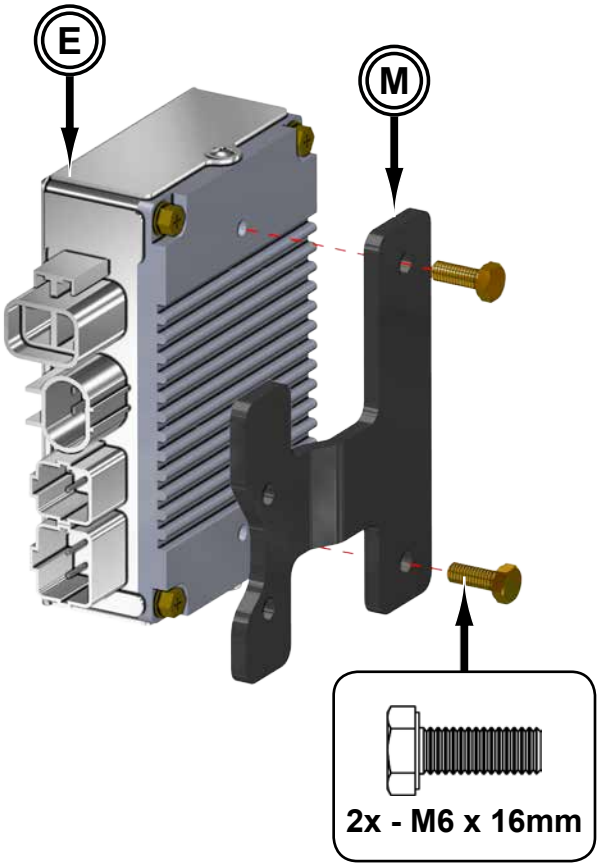

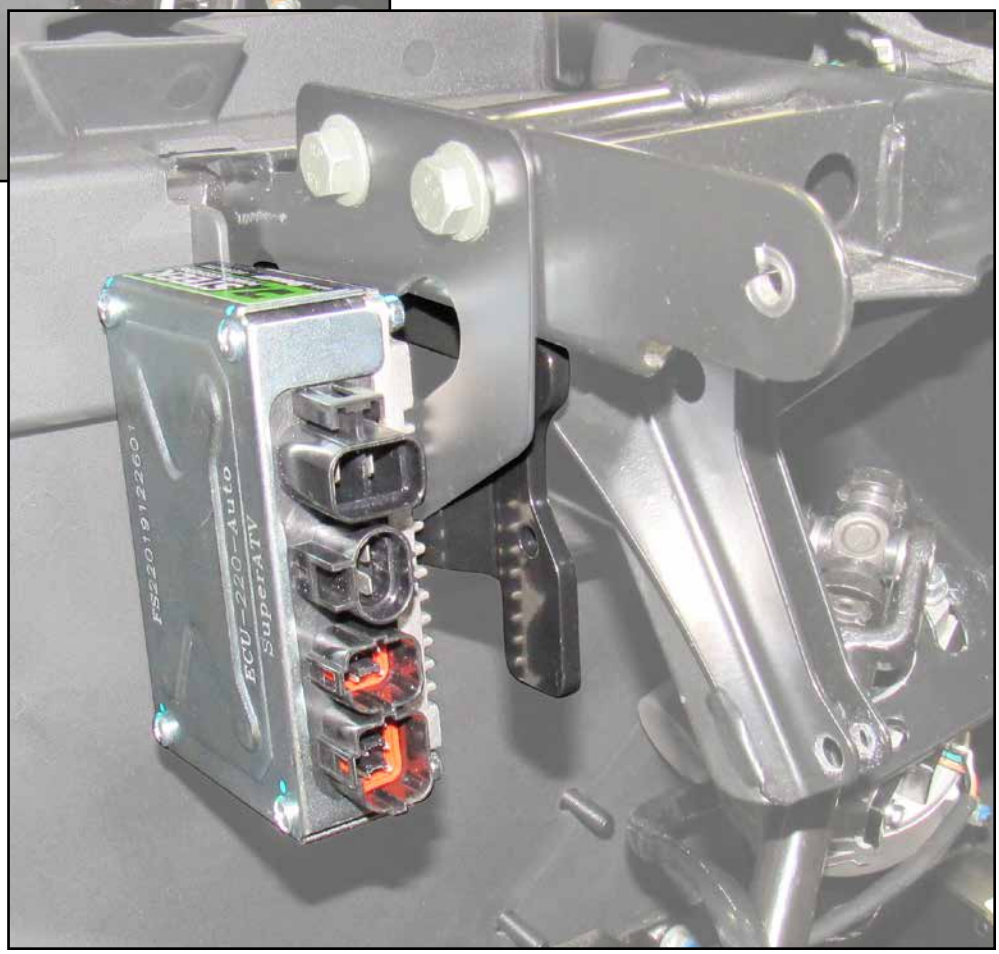

- Insert Steering Shaft (D) and stock Bushings into Steering Column.
- Secure Steering Column with hardware shown.
- Secure Tilt Adjustor with stock hardware.

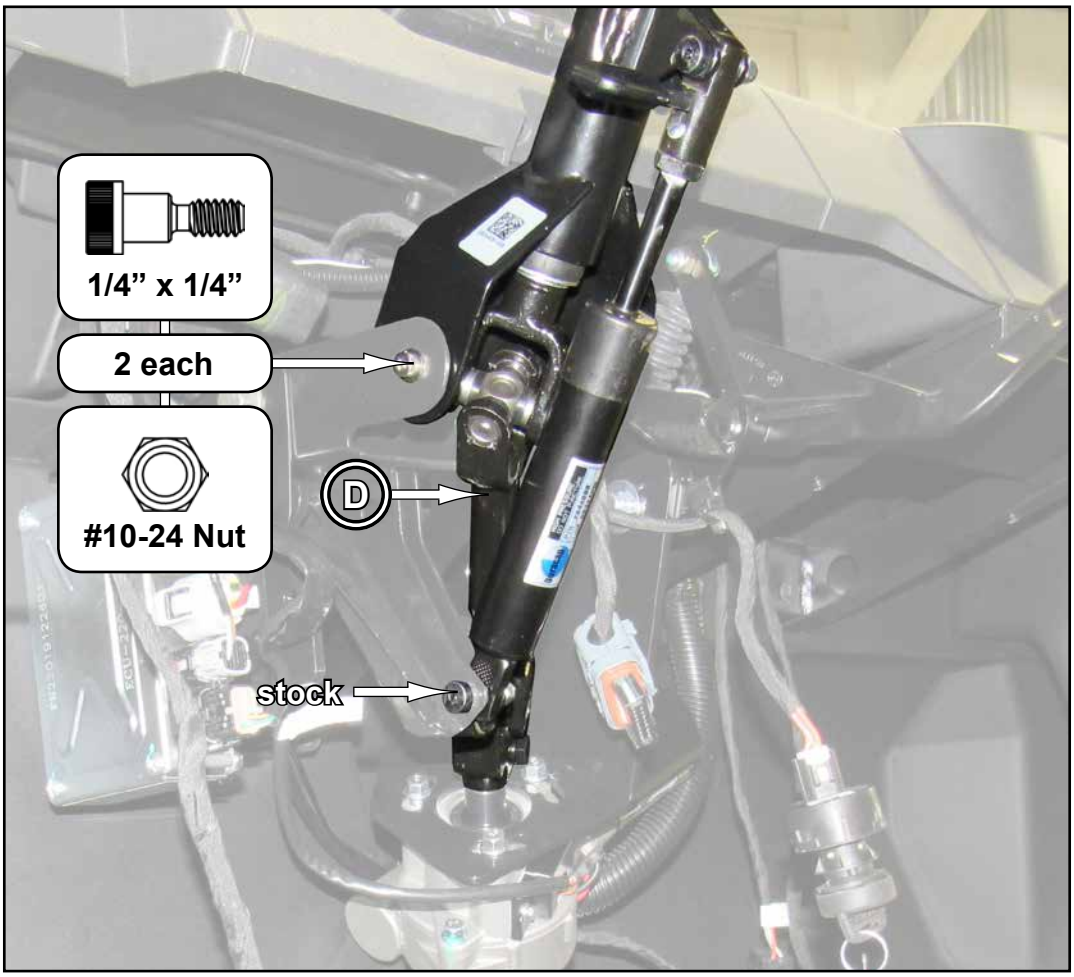

- Tighten all hardware and plug Wiring Harness (F) into ECU (E). ***Ensure that no wires are pinched during install.*** See following page for additional wiring.
- Reinstall necessary stock components.

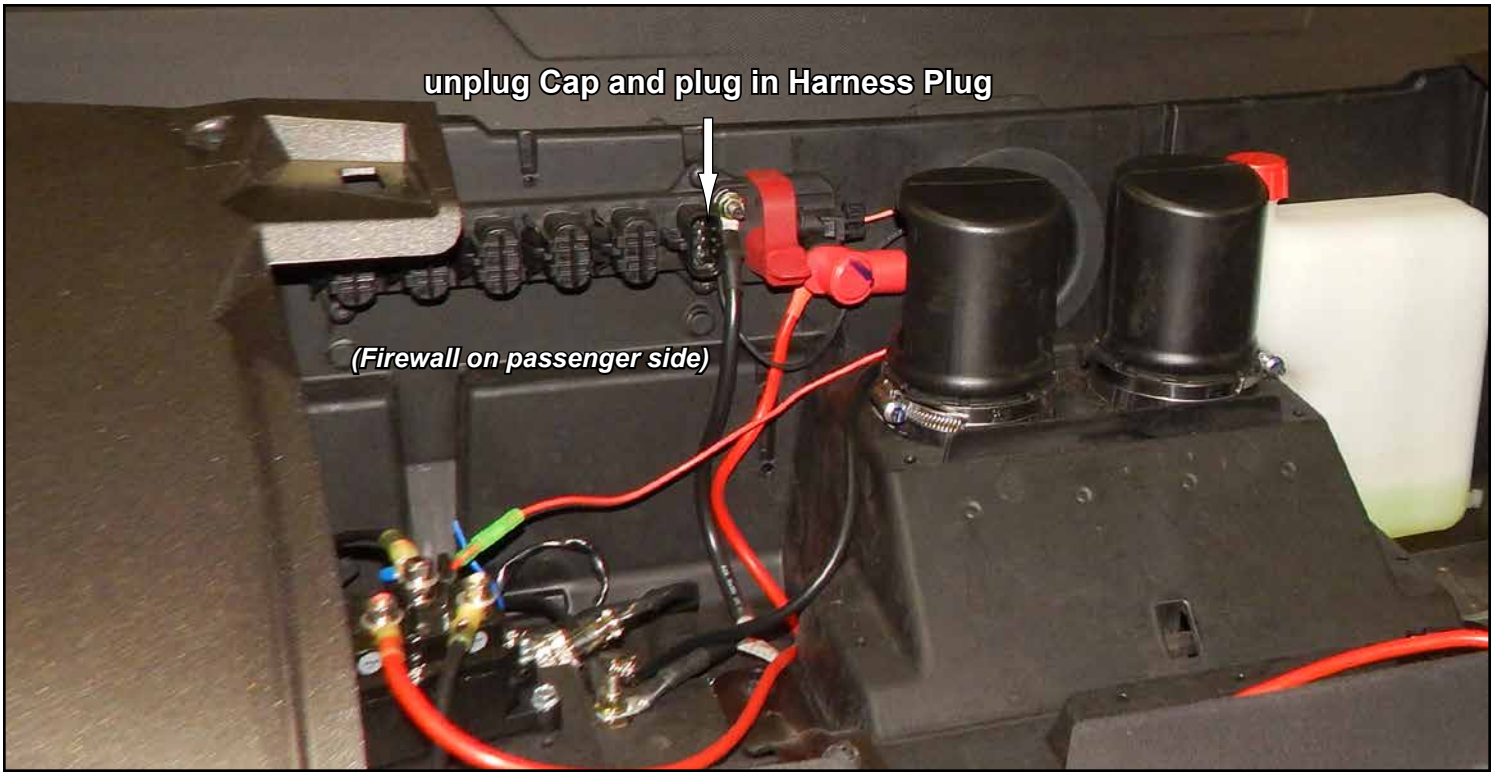

Harness Plug to Wire Harness

BROWN..... to Wire Harness BLACK
ORANGE..... to Wire Harness WHITE
RED..... to Wire Harness RED

