2753 Michigan Road · Madison, Indiana 47250
855-743-3427

INSTALLATION INSTRUCTIONS

RB-P-RAN1K-003: Rear Bumper

- Please look through and read these instructions BEFORE starting so you understand what processes you'll be doing, and possible extra tools you may need.
- Do Not discard product packaging until installation is complete and functioning properly.

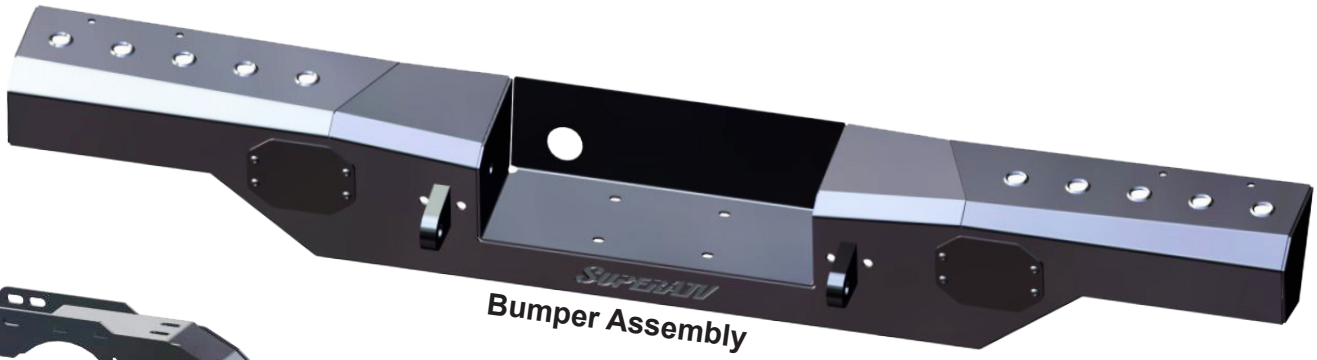











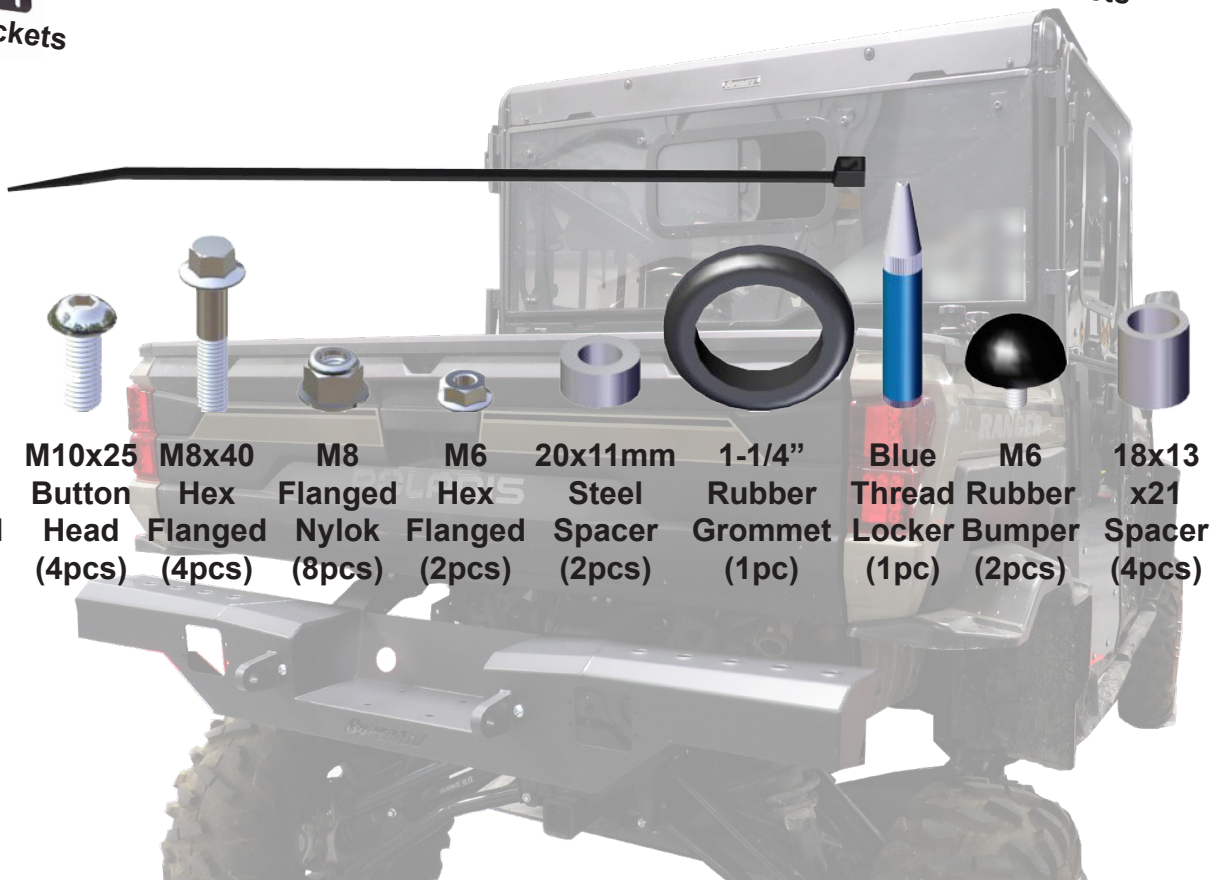

M8x20 Button Head (4pcs)

M8x20 Hex Flanged (18pcs)

M10x25 Button Head (4pcs)

M8x40 Hex Flanged (4pcs)

M8 Flanged Nylok (8pcs)

M6 Hex Flanged (2pcs)

20x11mm Steel Spacer (2pcs)

1-1/4" Rubber Grommet (1pc)

Blue Thread Locker (1pc)

M6 Rubber Bumper (2pcs)

18x13 x21 Spacer (4pcs)

©2025 Superatv.com. All Rights Reserved

Installation Assembly

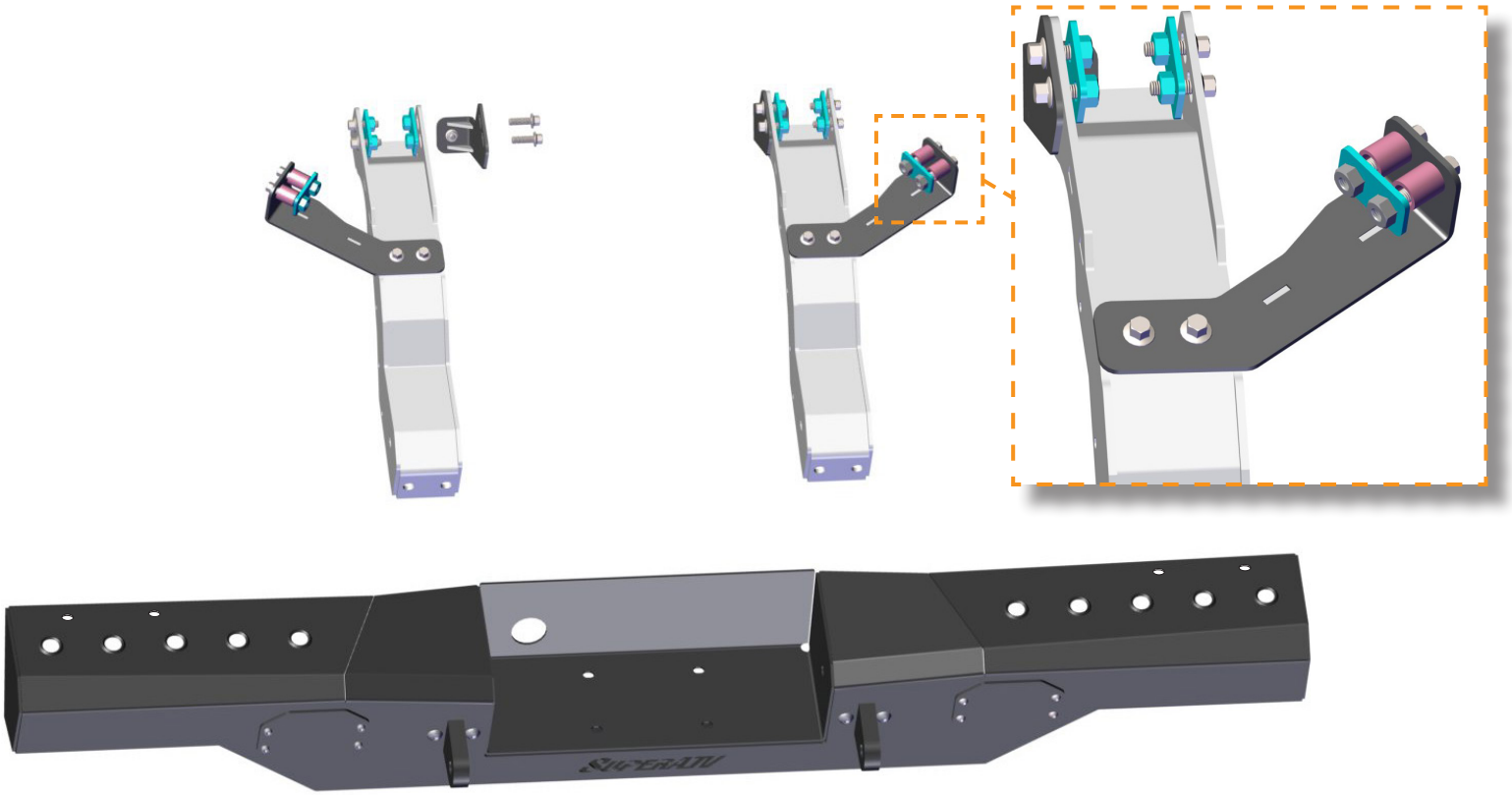

1.The first thing you need to do is **Remove** the **Screws** holding the **Heat Shield** on under the rear bumper area as shown in **Fig.1a-b**. You don't have to remove the heat shield, just the screws so you can pull it down a little for better access. See **Fig.1a-b**.

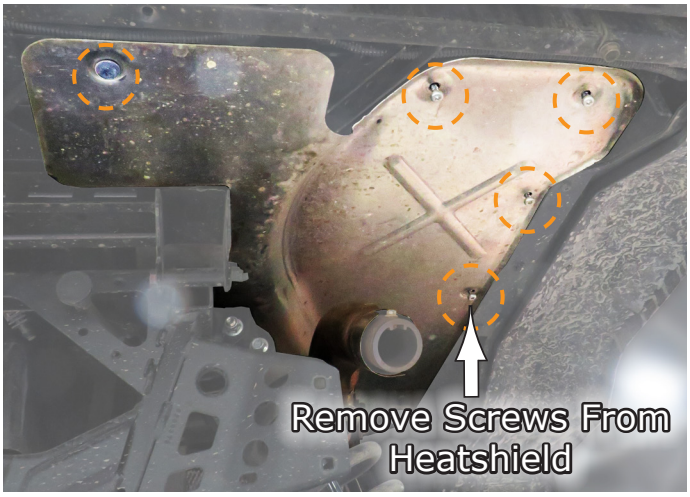

Fig.1a

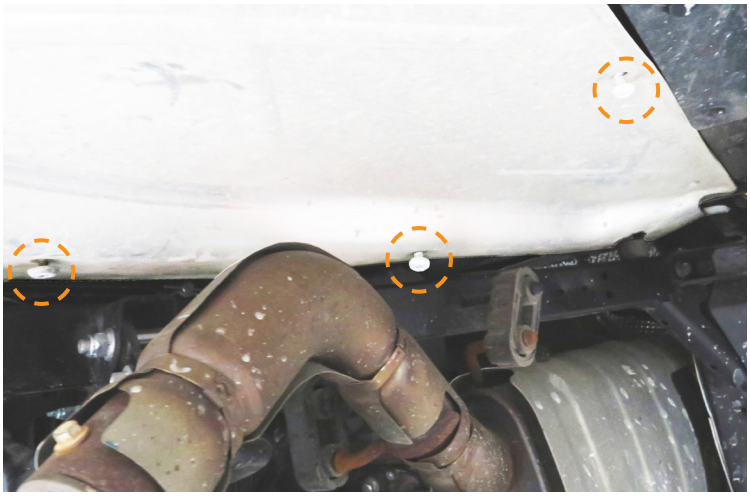

Fig.1b

©2025 Superatv.com. All Rights Reserved

2.Before installing all the parts, you will need to assemble the **Hanger Brackets** to the **Bumper Mounts** using the **M8x25 Hex Flanged Screws, 18x21 Spacers** and **Small Mounting Brackets** provided in your kit. (*Leave screws loose until both assemblies are installed onto vehicle. Once both are install with the bumper, then tighten all secure*) See **Fig.2a**. **Fig.2b** shows how this assembly will be mounted with the bumper in the coming steps.

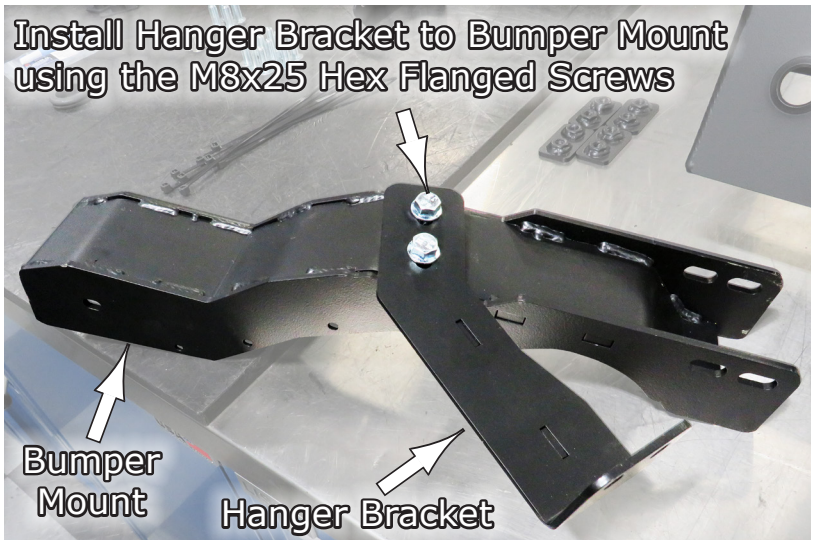

Fig.2a

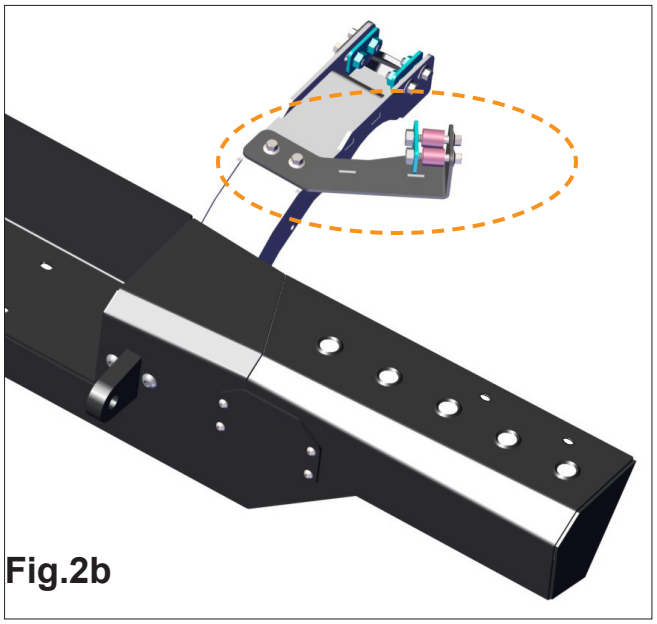

Fig.2b

3.Now, before you install the **Bumper Mount Assembly** onto the vehicle, find the **Small Mounting Brackets**, **Fig.3a**, that you will place on the **"inside"** of the frame Tubing as shown in **Fig.3b** to secure the Bumper Mounts to the frame. ***(NOTE: You will need to hold the Small Brackets in place to thread the bolts into them when installing)*** Then you will slide the Bumper Mount Assembly onto the vehicle framing as shown in **Fig.3c-d** aligning the holes to install.



Fig.3a

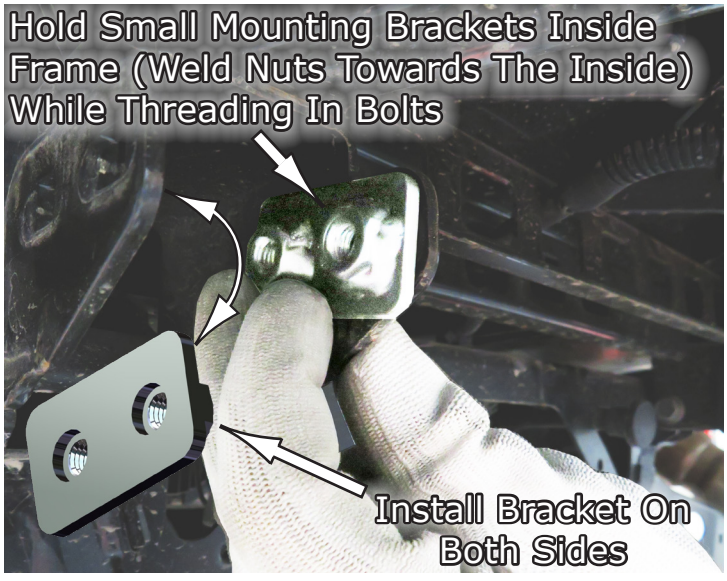

Fig.3b

©2025 Superatv.com. All Rights Reserved

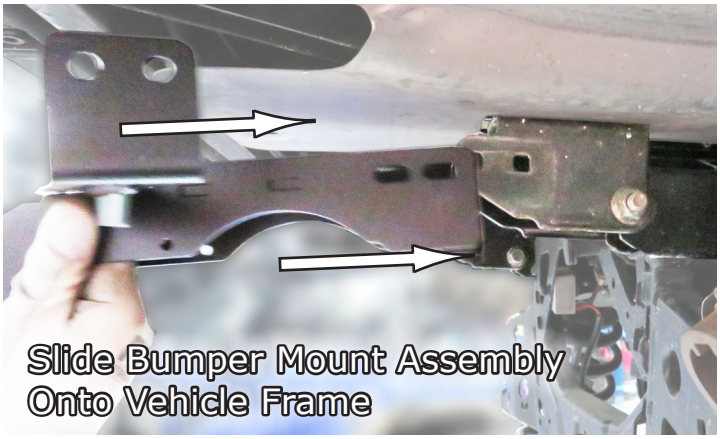

Fig.3c

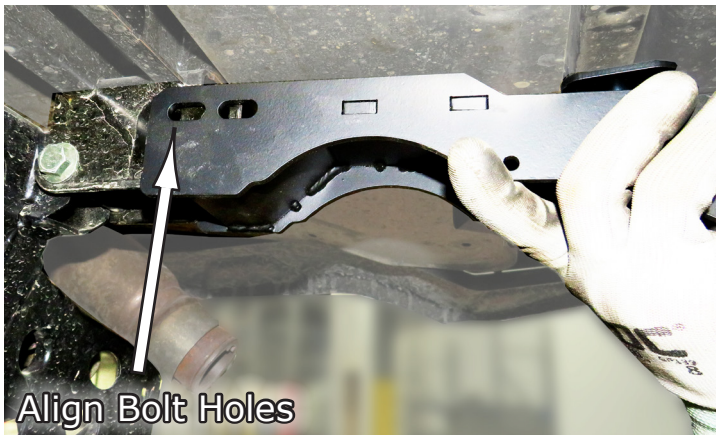

Fig.3d

4.As you are aligning the holes, don't forget you will also need to align the holes in the **Hanger Brackets** to the frame as well. See **Fig.4**.

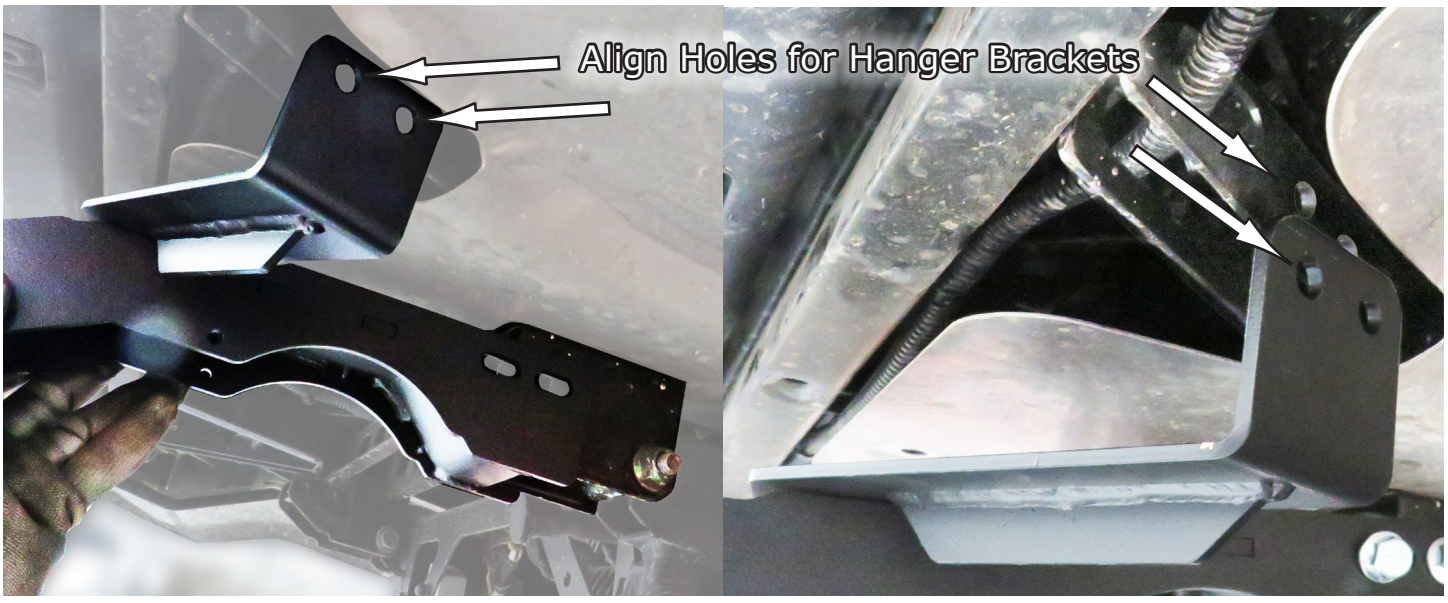

Fig.4

©2025 Superatv.com. All Rights Reserved

5.When installing the **Hanger Brackets** to the frame, you will also use one of the **Small Mounting Brackets** when installing. Except this time you will place it on the ***"outside"*** of the Frame instead of on the inside as you did previously. You will also use the **18x21 Spacers** and **M8x40 Hex Flanged** Bolts along with it for this end of the installation. **Fig.5a** shows where to install it, showing it on the outside of the frame and not on the inside. **Fig.5b** shows the Small Bracket & Spacers Installed. Yours should look like this example. Then **Fig.5c** shows the assembly and locations.

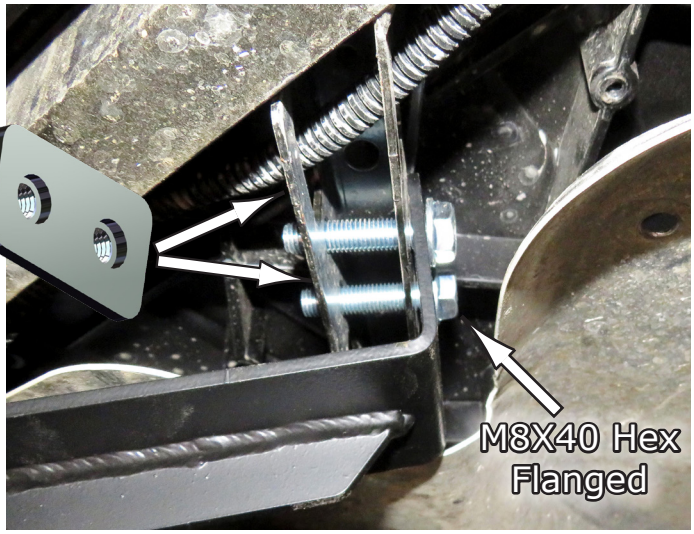

Fig.5a (view - right side of vehicle)

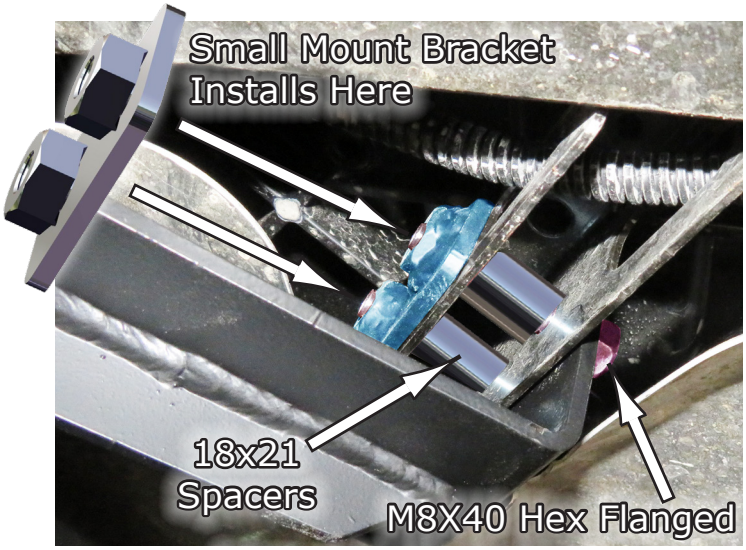

Fig.5b (view - right side of vehicle)

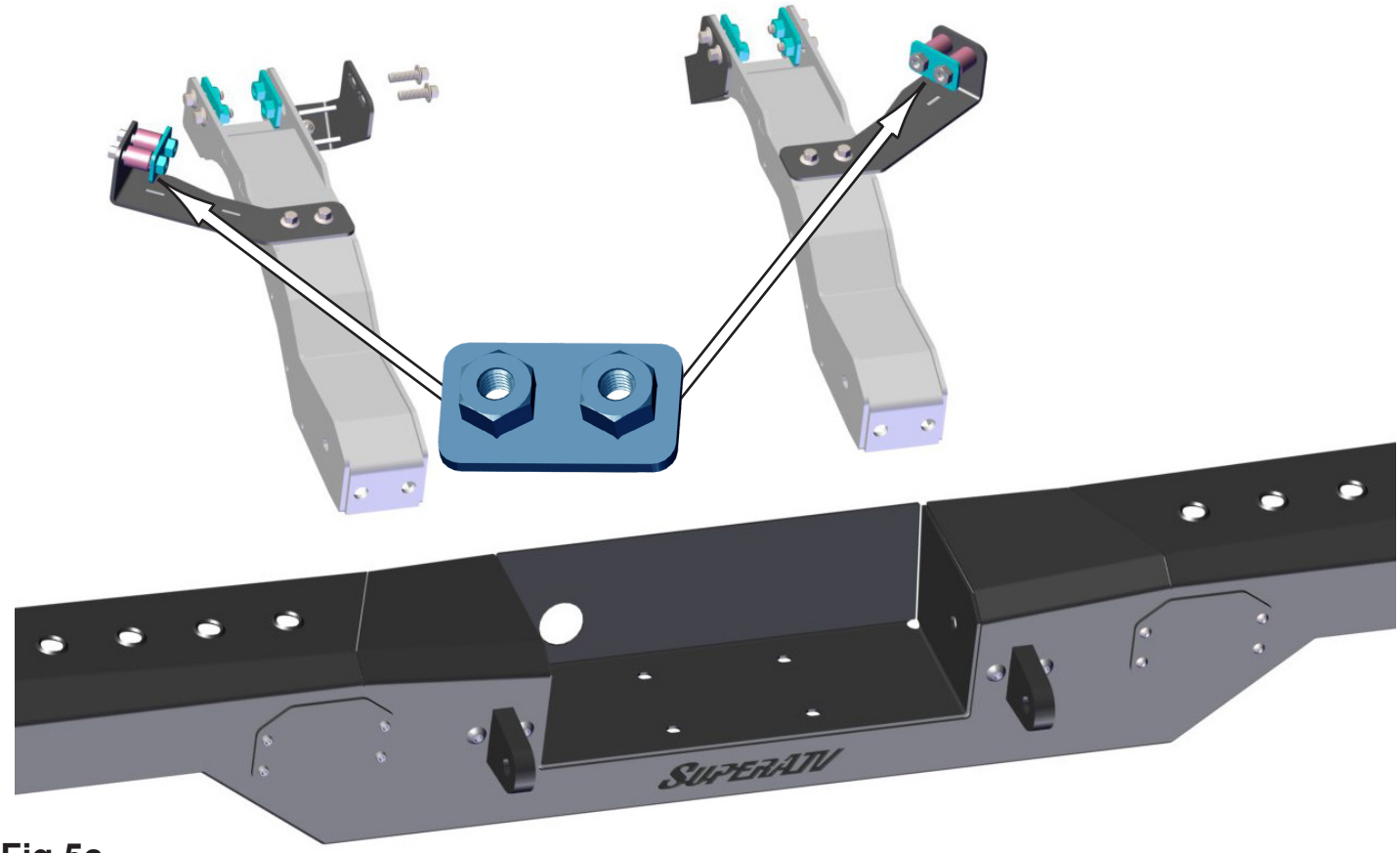

Fig.5c

©2025 Superatv.com. All Rights Reserved

6.Once you have both side of the Bumper Mounts installed (making sure all bolts are slightly loose so you can adjust things), you can now assemble the small **Stop Brackets** for the bed stop. Find the **Stop Brackets** from your kit, the **M6 Rubber Bumpers** and **M6 Hex Flanged Nuts**. **Fig.6a** shows how to assemble the stops, and **Fig.6b** shows the **Stop Bracket Assembly** together. There are Two (2) of these, one for each Bumper Mount.

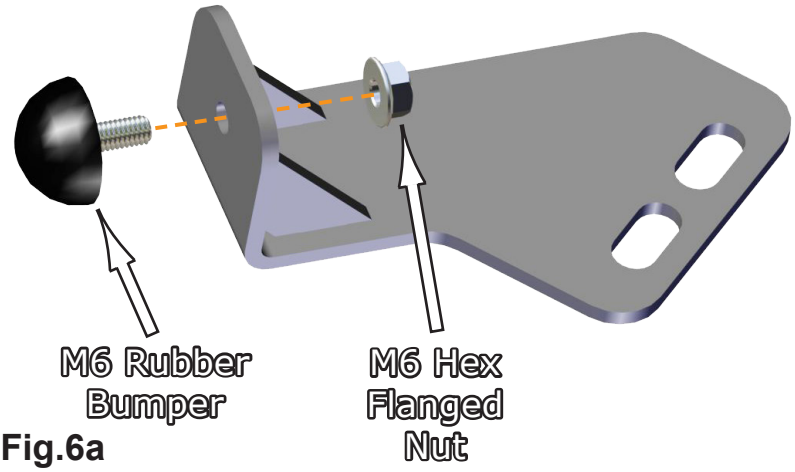

Fig.6a



Fig.6b

7.Now to **Mount** the **Bumper Stop**, you will need **Remove** the **Two (2) Bolts** where you mounted the Bumper Mounts to the Frame at previously. Then **Install** using the **Small Mounting Brackets** shown in **Fig.7a-b**. Then tighten down secure. Repeat for opposite side.

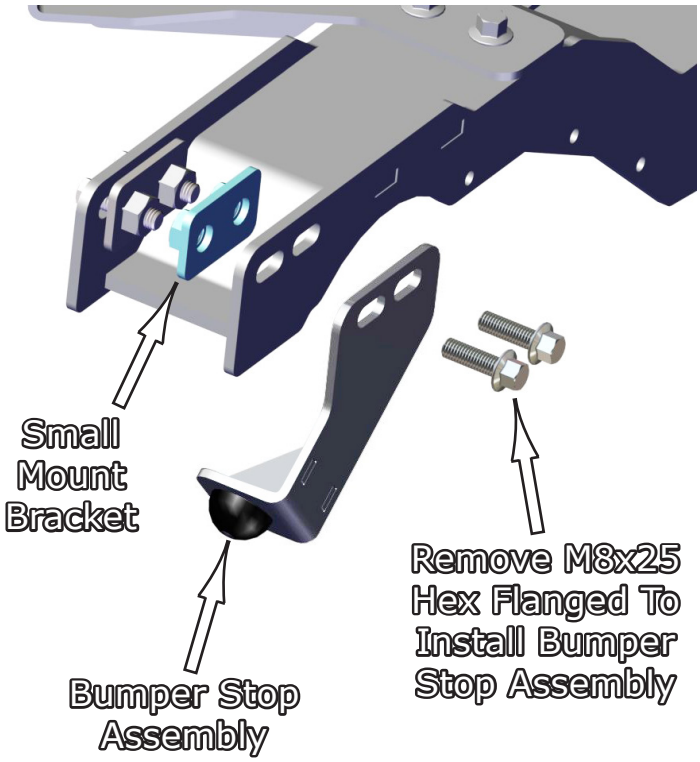

Fig.7a



Fig.7b

©2025 Superatv.com. All Rights Reserved

8. Now you can **Install** the **Bumper Assembly**. Do this by using the **M1x25 Button Head Screws** provided in your kit. **Fig.8a** shows the Screw locations on the bumper. Once you have all four (4) threaded in, tighten them down secure. **Fig.8b** shows the bumper installed.

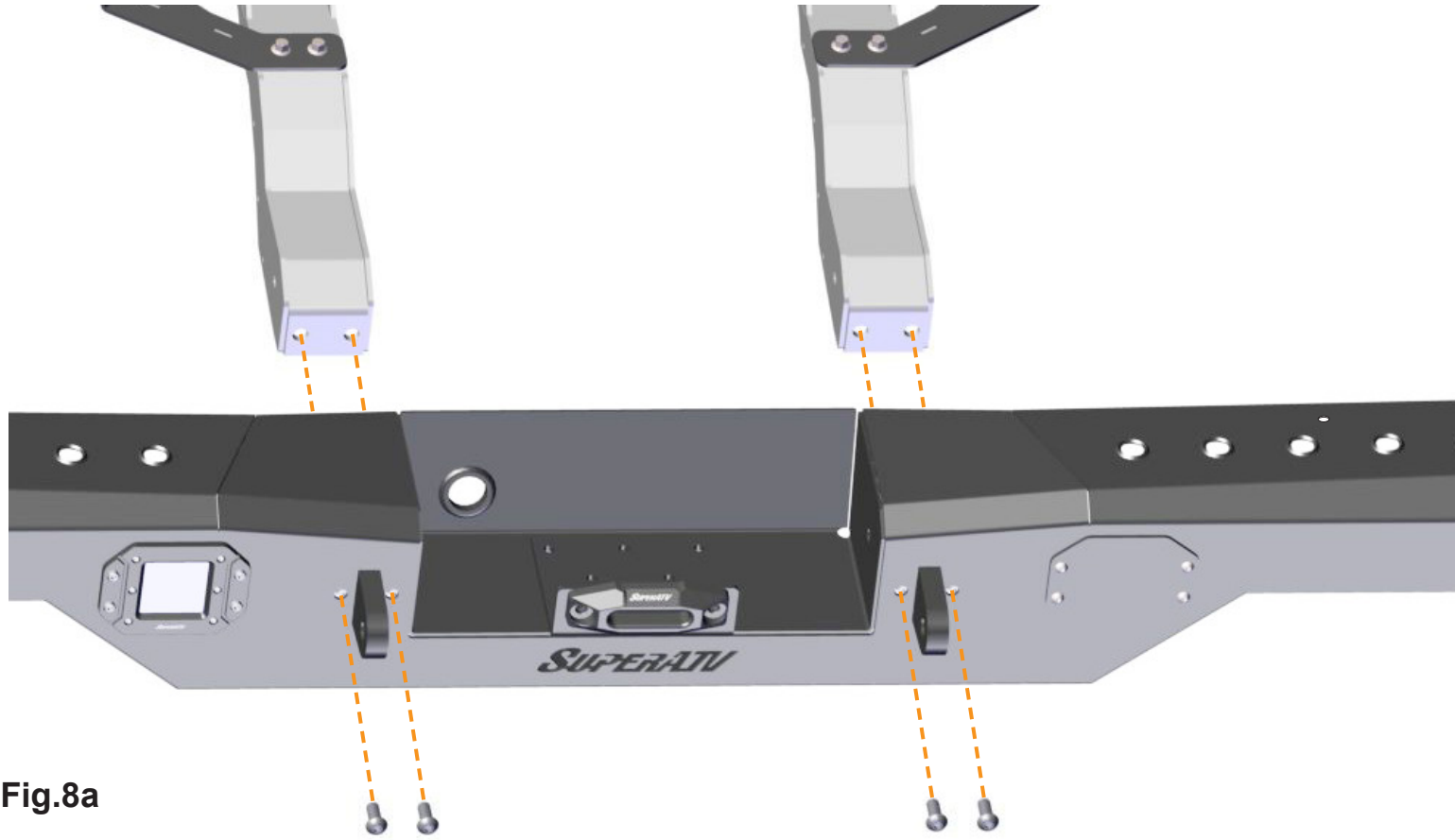

Fig.8a

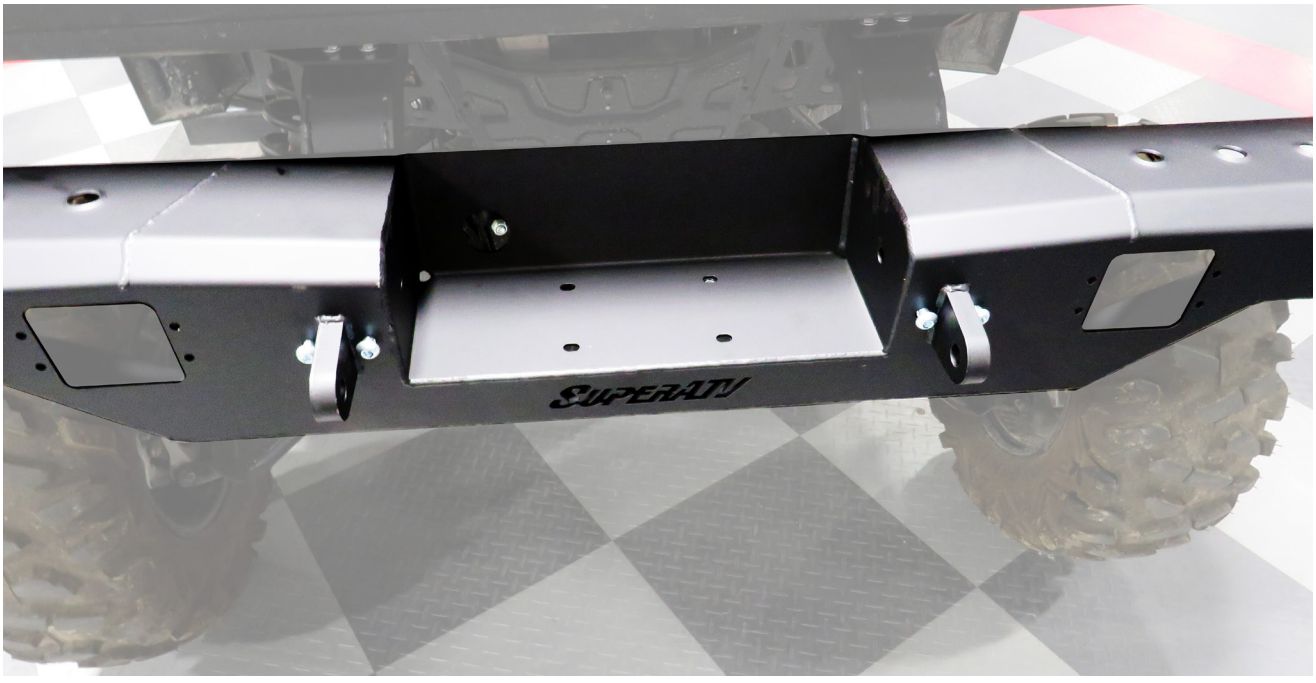

Fig.8b

©2025 Superatv.com. All Rights Reserved

9.The next thing you will need to do is **Install** the **Side Mount Brackets**. You will install using the **M8x20 Button Head Screws** and **M8 Flanged Nylock Nuts** provided in your kit. **Fig.9a** shows where these will be installed at on the bumper. Fig.9b shows the hardware for the bumper.

> **NOTE:** Notice that there is a **Side Bracket** made for the **LEFT** side & one for the **RIGHT** indicated by the "**Notch**" made in the bracket to fit the frame. The "**Notch**" of the bracket will **Face Outward** from the vehicle as shown for the side it is made for. See **Fig.9a-b** to identify the correct bracket for the correct side.



Fig.9a

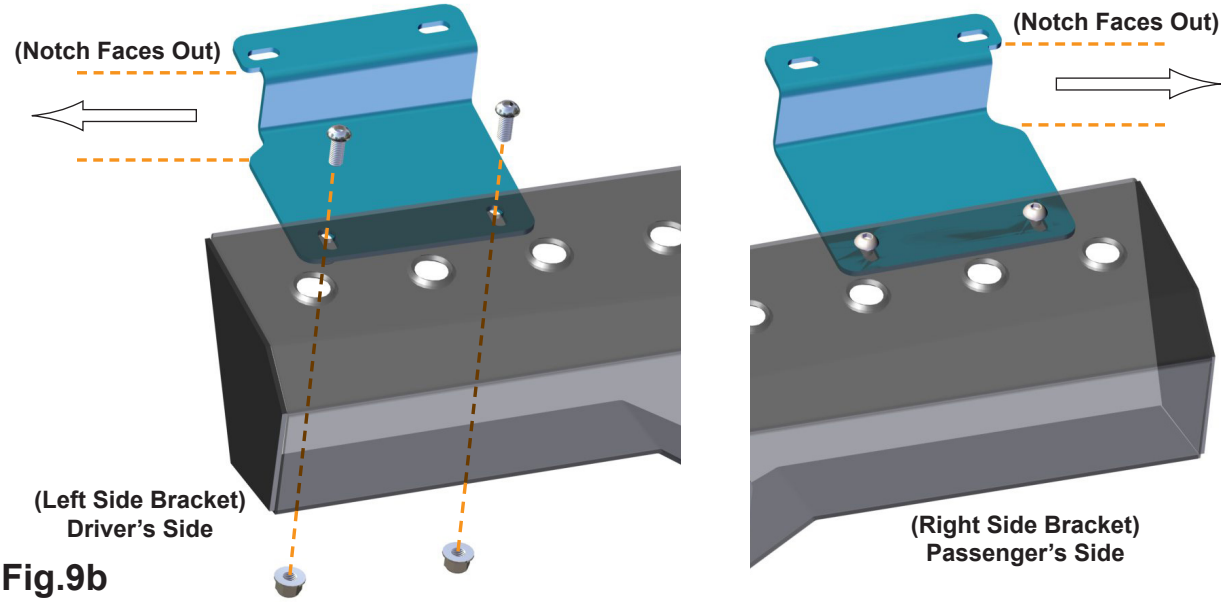

Fig.9b

10.Now you need to mount the brackets to the vehicle using the **M8x20 Hex Flanged Bolts** also provided in your kit. See **Fig.10a-b.**

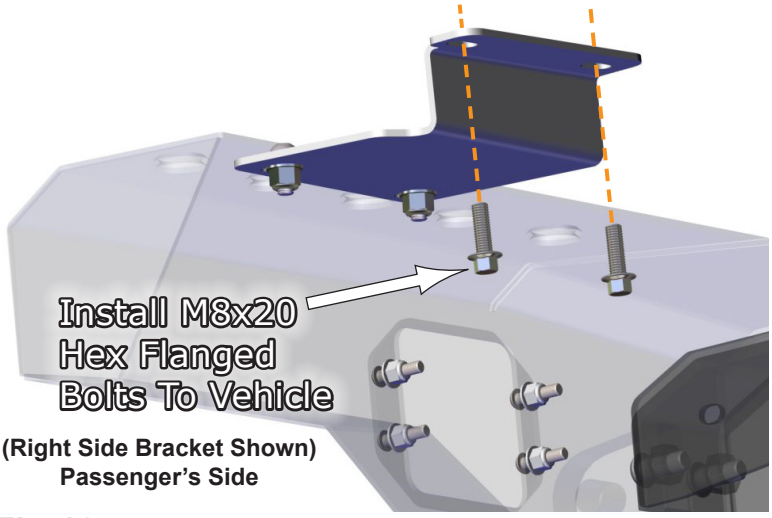

Fig.10a

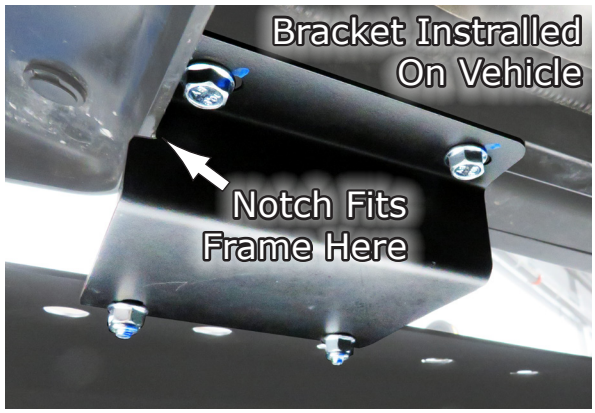

Fig.10b

©2025 Superatv.com. All Rights Reserved

11.Then go back and replace the screws for the heat shield you removed in the beginning shown in **Fig.11a**, and tighten all screws and bolts installed during this installation. See **Fig.11b**.

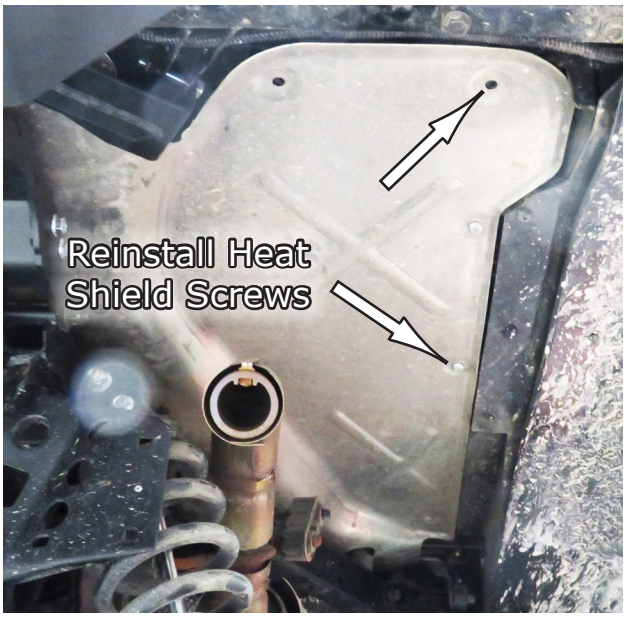

Fig.11a



Fig.11b

Liability Statement

SuperATV's® products are designed to best fit user's ATV/UTV under stock conditions. Adding, modifying, or fabricating any factory or aftermarket parts will void any warranty provided by SuperATV® and is not recommended. SuperATV's® products could interfere with other aftermarket accessories. If user has aftermarket products on machine, contact SuperATV® to verify that they will work together.

Although SuperATV® has thousands of satisfied customers, user should be aware that installing lift kits, long travel, or suspension kits, tires, etc. will change the ride of machine and may increase maintenance and part wear. Operating any off-road machine while, or after, consuming alcohol and/or drugs increases risk of bodily harm or death. No warranty or representation is made as to this product's ability to protect user from severe injury or death. SuperATV® urges operators and occupants to wear a helmet and appropriate riding gear at all times.

By purchasing and installing SuperATV® products, user agrees that should damages occur, SuperATV® will not be held responsible for loss of time, use, labor fees, replacement parts, or freight charges. SuperATV®, nor any 3rd party, will not be held responsible for any direct, indirect, incidental, special, or consequential damages that result from any product purchased from SuperATV®. The total liability of seller to user for all damages, losses, and causes of action, if any, shall not exceed the total purchase price paid for the product that gave rise to the claim.

SuperATV® will warranty only parts provided by SuperATV®. Any damage or problems with OEM housings, bearings, seals, or other manufacturers' products will not be covered by SuperATV®. SuperATV® parts and products are not warrantied if item was not installed properly, misused, or modified.

Installing, adding, modifying, or fabricating any factory or aftermarket product to your ATV/UTV may violate certain local, state, and federal laws. Be advised that laws vary depending on town, city, county, state, etc. Use of certain products on public streets, roads, or highways may be in violation law. The Buyer is solely and exclusively legally and personally responsible for any violation of the law by the installation or use of the product. You must abide by all local, state, and federal laws, including but not limited to vehicle safety, traffic laws, and ordinances. It is your responsibility to know the laws and how they apply to you.

The Buyer is responsible to fully understand the capability and limitations of his/her vehicle according to manufacturer specifications, warnings and instructions and agrees to hold SuperATV® harmless from any damage resulting from failure to adhere to such specifications, warnings and/ or instructions. The Buyer is also responsible to obey all applicable federal, state, and local laws and ordinances when operating his/her vehicle while using this product, and the Buyer agrees to hold SuperATV® harmless from any violation thereof.

If you have any problems/questions on this kit, contact us by email at Superatv.com.

Need help with your installation?

sales@superatv.com

www.superatv.com

1-855-743-3427

8:00am - 9:00pm EST M-Th
8:00am - 7:00pm EST Friday
9:00am - 2:00pm EST Saturday

Thank You For Choosing

Like SuperATV on Facebook to keep up to date on new products!

©2025 Superatv.com. All Rights Reserved