REV1® WARTHOG ADJUSTABLE WEIGHTS CLUTCH KIT

Calibration Kit: TRCA36_36-S2

Fits: CanAm P-Drive X3 Turbo
Trail/Sand/Mud Tires: 30”- 40”
0-3000ft Elev.

Be Sure To Read ALL Instructions and Illustrations Before Beginning!

KIT ITEMS INCLUDED:
- Drive Spring – Lime
- Driven Spring – Pink
- Weights – (included in kit)
- Stage 2 Helix – (included S2 kit)
- Decals
- Installation Instructions



Adjustable Weight Kit Items



Stage 2 Helix For S-2 Kits Only

TOOLS NEEDED:
- Floor jack & safety stands
- Drive clutch puller – (Call 855.743.3427 for proper tool for this kit)
- Driven clutch compression tool – (Call 855.743.3427 for proper tool for this kit)
- CanAm Belt Removal Tool
- Metric & English socket sets
- Torx set • Allen set



Lime Primary Clutch Spring

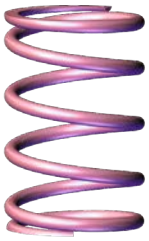

Pink Secondary Clutch Spring

NOTE:
- **Make sure the year & model on instruction sheet matches the year & model of your vehicle.**
- **Do Not attempt this install w/o proper tools or damage to clutches & injury could occur.**
- **Do Not attempt this install if you are not qualified. Injury could occur.**
- **Inspect Drive/Driven clutch faces before you install kit.**

- Installation -

1. With the transmission placed in PARK, remove the Left Rear Shock Guard and lower shock bolt, and move Shock out of the way. Or also remove the top shock bolt and remove complete shock out of the way. See **Fig.1.**
   (we have removed the shock for visual illustration)

(*Note: Removing the Lower Rear Shock Bolt or removing shock may make it easier to remove Clutch Cover, but not required*)



Fig.1

©2025 Superatv.com. All Rights Reserved

2. Next, you will remove the Clutch Cover and Air Exit Hose. To do this, loosen the clamp and remove the Air Exit Hose from the cover and move it out of the way. See **Fig.3**.

3. Now remove the 11 screws from the Clutch Cover, **Fig.3**, and set aside exposing the clutches as shown in **Fig.2**.

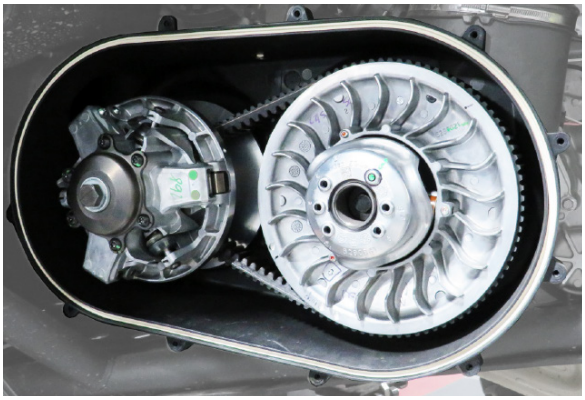

Fig.2

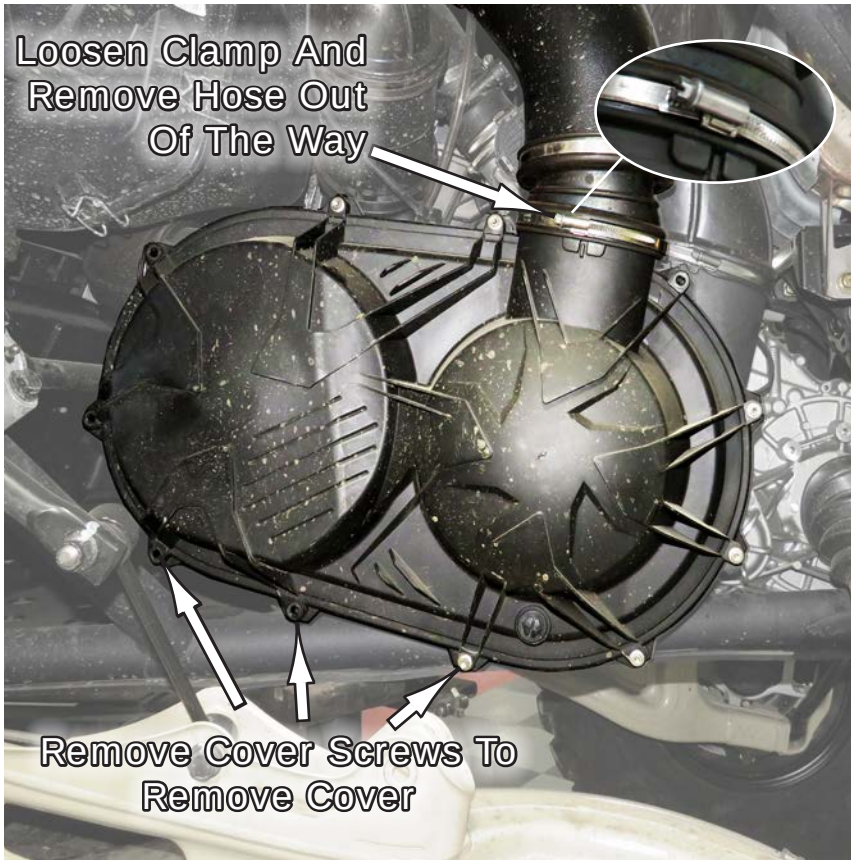

Fig.3

Secondary Driven Clutch

4. Next, you'll need to remove the belt. Take your CanAm Belt remover tool and screw it into the center of the Secondary Clutch. Then screw in the side screw to back out the clutch loosening the clutch. See **Fig.4**.



Fig.4

©2025 Superatv.com. All Rights Reserved

5. Then remove the belt from the clutches as shown in **Fig.5**.

6. After the belt has been removed, then remove the center retaining bolt from the secondary clutch as shown in **Fig.6**.



Fig.5



Fig.6

7. Once you have removed the center retaining bolt from the secondary clutch, pull and slightly rock the clutch off of the machine and set aside as shown in **Fig.7**.



Fig.7

Primary Drive Clutch

8. Now you need to remove the Primary Drive clutch. To do that, first remove the center retaining bolt as shown in **Fig.8**.

After the bolt has been taken out, you will next be removing the clutch with the clutch puller tool.



Fig.8

©2025 Superatv.com. All Rights Reserved

9. Now locate your Clutch Remover Tool as shown in **Fig.9**, and screw this into the clutch which will pull it off the spline enabling you to remove it from the machine.

Then pull the clutch off the spline as shown in **Fig.9b**.

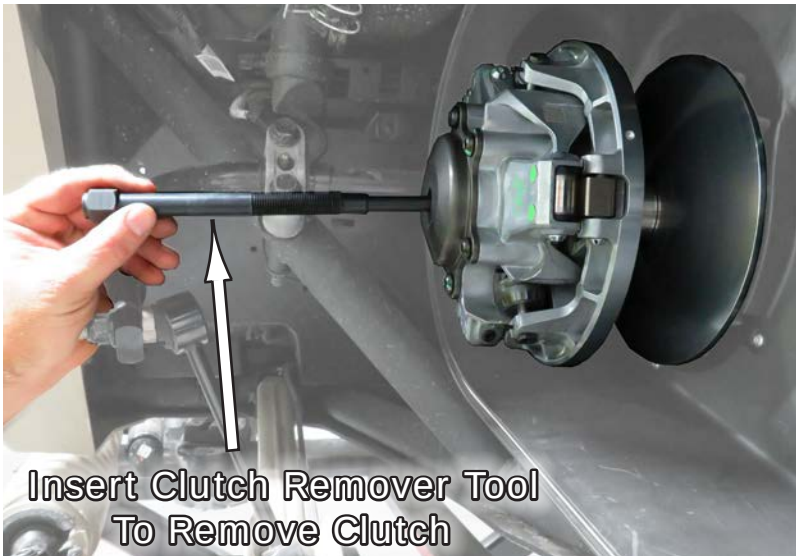

Fig.9a



Fig.9b

10. Next you will need to remove the top cap from the Primary Clutch by first removing the (6) bolts from the top. After all (6) bolts (T-40) have been removed, the cap may be stuck on there a little. If so, you may need to work it off or use a simple puller tool to get it off the shaft. It is not threaded nor does it have any clip rings holding it on there. It is on a smooth shaft. If it is not stuck, then it will come off with a little tapping. After bolts are taken out, the cap will release the tension. Set cap aside. See **Fig.10a-d**.



Fig.10a



Fig.10b



Fig.10c



Fig.10d

©2025 Superatv.com. All Rights Reserved

11. Next, you will need to separate the clutch to replace the internal spring. To do this, you will need to compress the clutch with the tool, remove the clip ring holding the retainer ring on, and removing the retainer so that the top half of the clutch can slide up and off.

Set the Primary Clutch on the compression tool as shown in **Fig.11a**. Compress the clutch with the tool as shown in **Fig.11b**. Once the retainer is compressed exposing the clip ring, remove the ring then release the compression so that you can remove the retainer and ring. See **Fig.11c**.



Fig.11a



Fig.11b

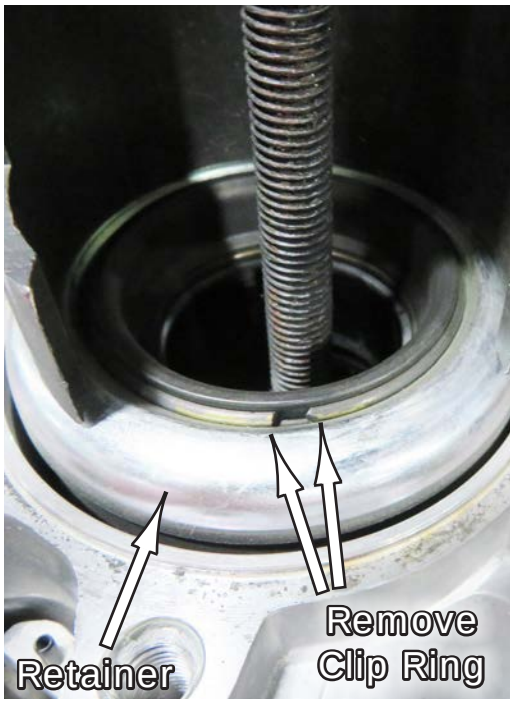

Fig.11c

12. Once the Retainer and Clip are removed, slide the top half of the clutch off the tool and set aside. See **Fig.12**.



Fig.12

©2025 Superatv.com. All Rights Reserved

13.Next you will replace the 3 factory weights one at a time. To do this, loosen and back the bolt securing the weight out a little ways, but leave threaded. Now tap on the head of the bolt as this will help drive the pin out the opposite side. As the pin comes out further unscrew the bolt more until you can just pull the pin on out the other side. See **Fig.13a-b**.

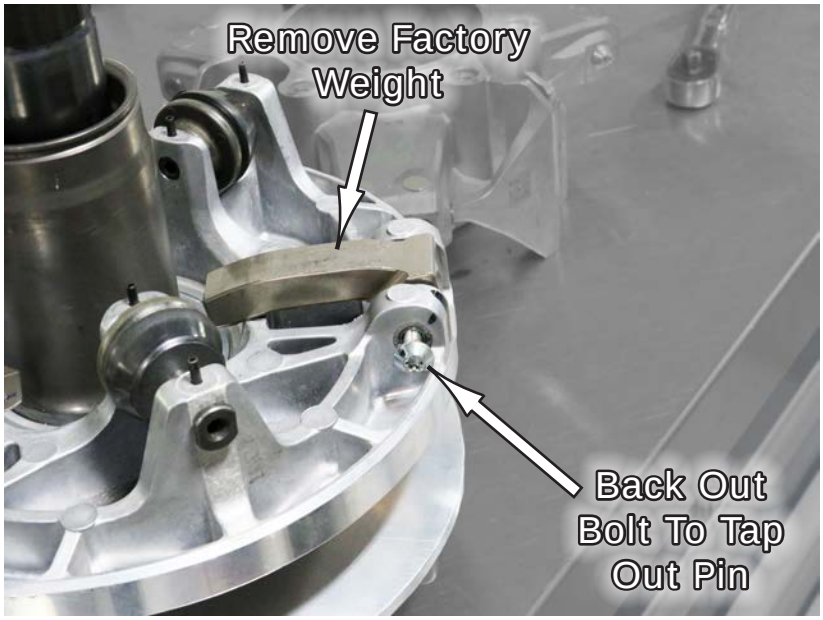

Fig.13a



Fig.13b

14. After you have removed the factory weight, replace it with one of your New REV-1 weights in its place. You will use your factory pin and bolt to reinstall it into the clutch. Tighten down to factory torque specs. See **Fig.14a-b**.



Fig.14a



Fig.14b

©2025 Superatv.com. All Rights Reserved

15. Now that your new weights are installed, you can now replace top half of the clutch back onto the base and replace your factory spring with the new **REV-1 Lime Primary Clutch Spring** provided in your kit. See **Fig.15**.



Fig.15

16. Then replace the retaining ring, previously removed, on top the spring and compress down with the tool so you can replace the clip ring holding the spring in place in the next step. See **Fig.16**.

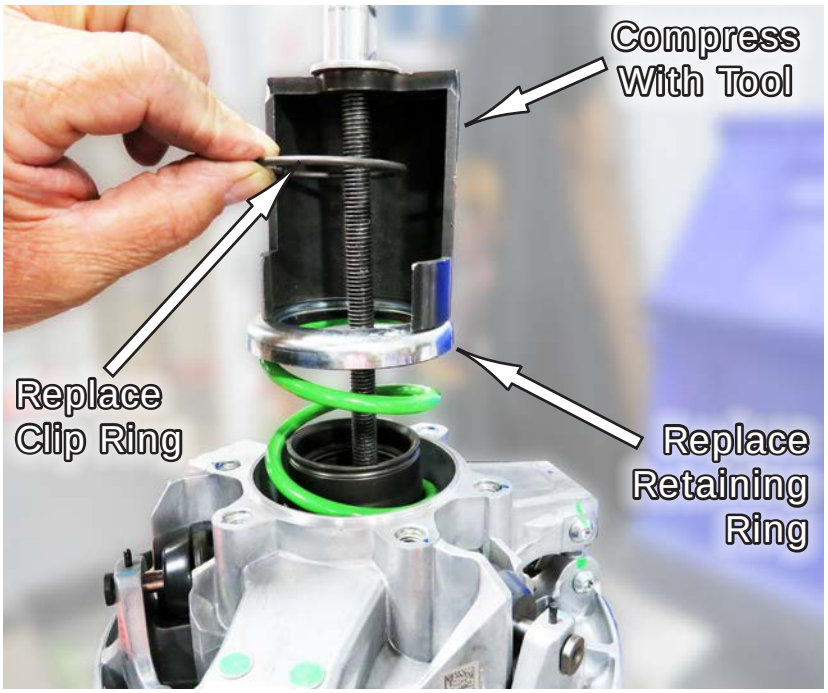

Fig.16

17. After you have compressed the retaining ring down enough to expose the ring groove, replace the Clip Ring in the groove and then release the compression to hold the spring in place. See **Fig.17**.



Fig.17

©2025 Superatv.com. All Rights Reserved

18. Now replace the top cap and (6) bolts to compress it down and tighten. See **Fig.18**.

19. Next you can reinstall the Primary Clutch on to the machine. Install the Center Retaining Bolt and Washer and torque to factory specifications. See **Fig.19**. You are ready for the next clutch.



Fig.18



Fig.19

Secondary Driven Clutch

20. First, notice the Arrows in the parts we marked in Pink in **Fig.20a**. These are for you to align the parts at these arrows when reassembling them together. We have marked them Pink to see them better as well as carried that line over to the other side to also align with the Arrow on that side as well. See **Fig.20b**. Be sure to line the parts up to these marking when reassembling them together.



Fig.20a



Fig.20b

©2025 Superatv.com. All Rights Reserved

21. To modify the Driven or Secondary Clutch, you will separate it like you did the Primary Clutch to replace the spring. To do this, place it on the same tool you previously used with the Helix down as shown in **Fig.21**.



Fig.21

22. Now use the compression tool to compress the clutch to relieve the pressure so that you can remove the (3) bolts on the top as shown in **Fig.22**.



Fig.22

23. After removing the (3) bolts, release the compressor and slide the clutch sheaves up off the Helix exposing the Factory Spring as shown in **Fig.23**. Remove the Spring Cap and Spring.

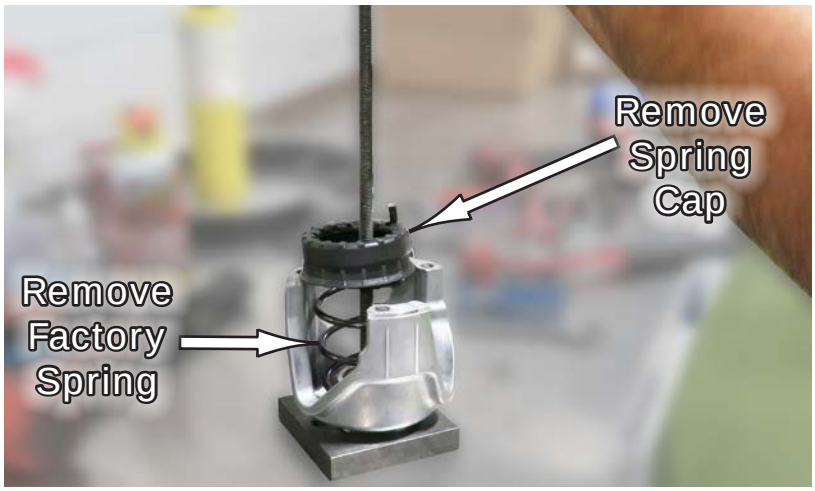

Fig.23

©2025 Superatv.com. All Rights Reserved

• • • • • SPECIAL INSTRUCTIONS FOR YOUR MODEL NUMBER OPTIONS • • • • •
PLEASE READ

NOTE: Up to this step, the installation process is the same for all versions and options that you can choose from when ordering your kit. The next section will show a table of different combinations or choices you can make when ordering this kit. It shows which of the Springs you will use in the Driven Clutch and how many of the magnet weights you will need to install in the Flyweights, all provided in your kit. You will just look for the combination of choices you chose when ordering your kit and apply what the table says to your specific choices. You will look for the Terrain, what Tire Size and Elevation you chose.

The sections after the table are examples of the Part number with various options chosen showing what Spring(s) are being used as well as the "P" number which determines the number of magnet weights you will insert in each weight seat location of the Flyweight.

OPTIONS TABLE - For TRCA36 Kit

CAN-AM P-DRIVE X3 TURBO RR 22-25

Terrain	Tire Size	Elevation	Weight Set-up				Drive Spring	Driven Spring
			Hole1	Hole2	Hole3	Hole4		
Trail	30"-32"	0-3000'	5	4	4	4	Lime	Pink
Trail	33"-35"	0-3000'	5	4	4	3	Lime	Pink
Sand	30"-32"	0-3000'	4	4	4	4	Lime	Pink
Mud	33"-35"	0-3000'	5	3	4	3	Lime	Pink
If machine is tuned or otherwise making more power than stock, it may be necessary to add weight to bring rpm back dow								
Recommended to start with 1 additional magnet in hole 4.								
Do not exceed 5 magnets per hole								

Recommended Settings for Elevation	
3000'-6000'	Remove 1 magnet from hole #3
6000'+	Remove 1 magnet from hole #4

Recommended Settings for Gear Reduction		
Actual Tire Size	Gear Reduction	Corresponding Set-up Tire Size
33"-35"	15-30%	30"-32"
36"-40"	15%	33"-35"
36"-40"	30-45%	30"-32"
40"-44"	30%	33"-35"
40"-44"	45-70%	30"-32"

Take your actual tires size that you have in the "Actual Tire" column, match the % of reduction in the middle section that you have, then substitute the tire size in the "Corre-sponding" column in the same row as your actual tire size to make your choices for correct set-up above.

Engagement:	Top RPM:	MAX RPM:
2200--2300rpm	7900-8100	8300

©2025 Superatv.com. All Rights Reserved

Examples of choices and how it affects the Springs and Magnet Weights used in your kit.

FOR MODEL: TRCA36: **Using 30"-32" Tires @ 0-3k ft. Elevation - Trail Ride - Top RPM:8100**

- Remove Factory **Drive Spring** and replace with your **"Lime" Spring** provided in your kit.
- Then replace Factory **Driven Spring** with the new **"Pink" Spring,** provided in your kit.

*** Your Specific Weight Set-up Number For This Kit is: P5444T.**
Write down the number associated with the color spring you will use as you will need it to reference how to load your weights with the magnets in the following steps.







Use Lime Drive Spring







Use Pink Driven Spring

REV1® CLUTCH KIT

©2025 Superatv.com. All Rights Reserved

FOR MODEL: TRCA36: **Using 33"-35" Tires @ 0-3k ft. Elevation - Trail Ride - Top RPM:8100**

- Remove Factory **Drive Spring** and replace with your **"Lime" Spring** provided in your kit.
- Then replace Factory **Driven Spring** with the new **"Pink" Spring,** provided in your kit.

*** Your Specific Weight Set-up Number For This Kit is: P5443T.**
Write down the number associated with the color spring you will use as you will need it to reference how to load your weights with the magnets in the following steps.







Use Lime Drive Spring

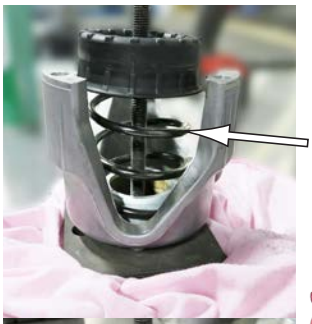





Use Pink Driven Spring

FOR MODEL: TRCA36: **Using 30"-32" Tires @ 0-3k ft. Elevation - Sand Ride - Top RPM:8100**

- Remove Factory **Drive Spring** and replace with your **"Lime" Spring** provided in your kit.
- Then replace Factory **Driven Spring** with the new **"Pink" Spring,** provided in your kit.

*** Your Specific Weight Set-up Number For This Kit is: P4444T.**
Write down the number associated with the color spring you will use as you will need it to reference how to load your weights with the magnets in the following steps.







Use Lime Drive Spring

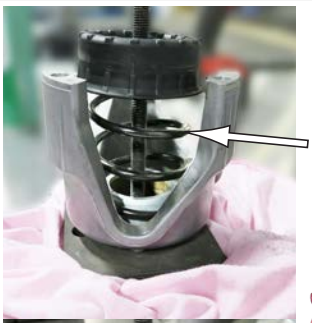





Use Pink Driven Spring

©2025 Superatv.com. All Rights Reserved

FOR MODEL: TRCA36: Using 33"-35" Tires @ 0-3k ft. Elevation - Mud Ride - Top RPM:8100

· Remove Factory **Drive Spring** and replace with your **"Lime" Spring** provided in your kit.

· Then replace Factory **Driven Spring** with the new **"Pink" Spring,** provided in your kit.

*** Your Specific Weight Set-up Number For This Kit is: P5343T.**
Write down the number associated with the color spring you will use as you will need it to reference how to load your weights with the magnets in the following steps.







Use Lime Drive Spring







Use Pink Driven Spring

REV1® CLUTCH KIT

NOTE: This next section is for the TRCA36-S2 Models which include a NEW HELIX in the kit and a Different Build Sheet for Weight Options. Follow these instructions if you purchased the TRCA36-S2 Kit.

©2025 Superatv.com. All Rights Reserved

OPTIONS TABLE - For TRCA36-S2 Kit

CAN-AM P-DRIVE X3 TURBO RR 22-25

Terrain	Tire Size	Elevation	Weight Set-up				Drive Spring	Driven Spring	Helix
			Hole1	Hole2	Hole3	Hole4			
Trail	30"-32"	0-3000'	5	4	4	4	Lime	Pink	44-48
Trail	33"-35"	0-3000'	5	4	3	4	Lime	Pink	44-48
Sand	30"-32"	0-3000'	4	4	4	4	Lime	Pink	44-48
Mud	33"-35"	0-3000'	5	3	4	4	Lime	Pink	44-48
Mud	36"-40"	0-3000'	5	3	4	3	Lime	Pink	44-48

If machine is tuned or otherwise making more power than stock, it may be necessary to add weight to bring rpm back down. Recommended to start with 1 additional magnet in hole 4.

Do not exceed 5 magnets per hole.

Recommended Settings for Elevation	
3000'-6000'	Remove 1 magnet from hole #3
6000'+	Remove 1 magnet from hole #4

Recommended Settings for Gear Reduction		
Actual Tire Size	Gear Reduction	Corresponding Set-up Tire Size
33"-35"	15-30%	30"-32"
36"-40"	15%	33"-35"
36"-40"	30-45%	30"-32"
40"-44"	30%	33"-35"
40"-44"	45-70%	30"-32"

Take your actual tires size that you have in the "Actual Tire" column, match the % of reduction in the middle section that you have, then substitute the tire size in the "Corresponding" column in the same row as your actual tire size to make your choices for correct set-up above.

Engagement:	Top RPM:	MAX RPM:
2200--2300rpm	7900-8100	8300

FOR MODEL: TRCA36-S2: Using 30"-32" Tires @ 0-3k ft. Elevation - Trail Ride - Top RPM:8300

- Remove Factory **Drive Spring** and replace with your **"Lime" Spring** provided in your kit.
- Then replace Factory **Driven Spring** with the new **"Pink" Spring,** provided in your kit. Also, for this **S-2 Kit** you will **Remove** the **Factory Helix** and replace it with your **New 44-48 Helix** also included your kit.

*** Your Specific Weight Set-up Number For This Kit is: P5444T.**
Write down the number associated with the color spring you will use as you will need it to reference how to load your weights with the magnets in the following steps.







Use Lime Drive Spring







Use Pink Driven Spring

©2025 Superatv.com. All Rights Reserved

FOR MODEL: TRCA36-S2: Using 33"-35" Tires @ 0-3k ft. Elevation - Trail Ride - Top RPM:8300

· Remove Factory **Drive Spring** and replace with your **"Lime" Spring** provided in your kit.

· Then replace Factory **Driven Spring** with the new **"Pink" Spring,** provided in your kit. Also, for this **S-2 Kit** you will **Remove** the **Factory Helix** and replace it with your **New 44-48 Helix** also included your kit.

*** Your Specific Weight Set-up Number For This Kit is: P5434T.**
Write down the number associated with the color spring you will use as you will need it to reference how to load your weights with the magnets in the following steps.







Use Lime Drive Spring







Use Pink Driven Spring

FOR MODEL: TRCA36-S2: Using 30"-32" Tires @ 0-3k ft. Elevation - Sand Ride - Top RPM:8300

· Remove Factory **Drive Spring** and replace with your **"Lime" Spring** provided in your kit.

· Then replace Factory **Driven Spring** with the new **"Pink" Spring,** provided in your kit. Also, for this **S-2 Kit** you will **Remove** the **Factory Helix** and replace it with your **New 44-48 Helix** also included your kit.

*** Your Specific Weight Set-up Number For This Kit is: P4444T.**
Write down the number associated with the color spring you will use as you will need it to reference how to load your weights with the magnets in the following steps.







Use Lime Drive Spring







Use Pink Driven Spring

©2025 Superatv.com. All Rights Reserved

FOR MODEL: TRCA36-S2: Using 33"-35" Tires @ 0-3k ft. Elevation - Mud Ride - Top RPM:8300

· Remove Factory **Drive Spring** and replace with your **"Lime" Spring** provided in your kit.

· Then replace Factory **Driven Spring** with the new **"Pink" Spring,** provided in your kit. Also, for this **S-2 Kit** you will **Remove** the **Factory Helix** and replace it with your **New 44-48 Helix** also included your kit.

*** Your Specific Weight Set-up Number For This Kit is: P5344T.**
Write down the number associated with the color spring you will use as you will need it to reference how to load your weights with the magnets in the following steps.







Use Lime Drive Spring







Use Pink Driven Spring

FOR MODEL: TRCA36-S2: Using 36"-40" Tires @ 0-3k ft. Elevation - Mud Ride - Top RPM:8300

· Remove Factory **Drive Spring** and replace with your **"Lime" Spring** provided in your kit.

· Then replace Factory **Driven Spring** with the new **"Pink" Spring,** provided in your kit. Also, for this **S-2 Kit** you will **Remove** the **Factory Helix** and replace it with your **New 44-48 Helix** also included your kit.

*** Your Specific Weight Set-up Number For This Kit is: P5343T.**
Write down the number associated with the color spring you will use as you will need it to reference how to load your weights with the magnets in the following steps.







Use Lime Drive Spring







Use Pink Driven Spring

©2025 Superatv.com. All Rights Reserved

Now continue with the remaining instructions to complete the installation.

24. After removing the Factory Spring, replace it with the "**Pink Spring**" from your kit and set the Spring Cap back on it as shown in **Fig.24**.

25.Replace the Clutch Sheaves on top the Helix and spring as shown in **Fig.25**.



Fig.24



Fig.25

©2025 Superatv.com. All Rights Reserved

NOTE: After all Factory Flyweights have been removed, you will need to load your new weights with the correct count of magnets in each seat location determined by the number associated with the model number of your kit, or per the options you chose. This number is the one you would have written down in the previous steps. This "P" number tells you how many magnet weights to insert in each seat location. The illustration below gives you an example of this "P" number and how it indicates how many magnets you will place in each flyweight seat location.

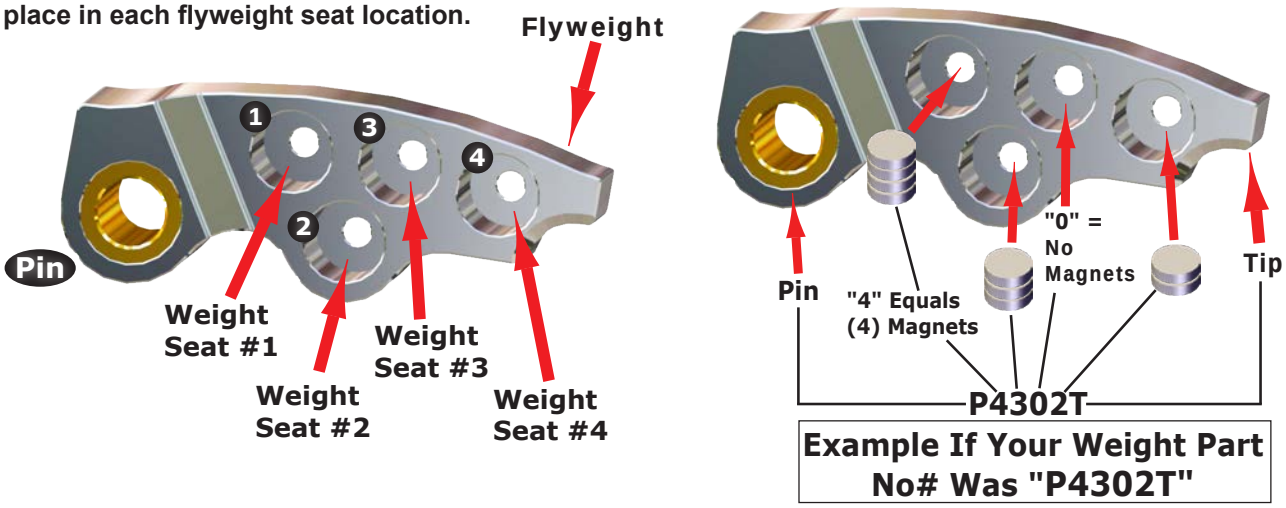

MAGNET WEIGHT SAFETY

⚠CAUTION These magnets have a very strong magnetic force and special care should be taken handling them during adjusting, adding or storing them. Allowing them to rapidly slam together may cause them to shatter sending metal fragments towards you causing possible bodily injury. Always wear proper eye protection when handling them just in case. See below.

* **Storage:** Keep magnets in plastic bag, if possible, to prevent attraction of magnetic debris.

* **Work Area:** Make sure work area is clean and free of metal debris.

* **Handling:** When adding or removing magnets from the weight seats, use an Allen wrench to push magnets out of the seat, from the bottom, by inserting the Allen wrench thru the hole in the bottom of the seats. See above illustration. Also use an Allen wrench to Install magnets by letting them down slowly into the Weight Seat as to keep them from slamming together.

MAGNETIC ADJUSTABLE WEIGHT BASICS

These weights may or may not come pre-loaded in your kit. However, if changes are made to the machine such as tire size or elevation cargo etc., this kit will allow you to make adjustments without replacing the weights in most situations. Here are some suggestions:

- The hole **Closest to the Pin** will have a greater affect with **Low RPM** belt squeeze and RPM.
- The **Center Hole** will have the greatest affect on **Midrange RPM** and belt squeeze.
- The hole **Farthest from the Pin** will have the most affect on **Top RPM** and belt squeeze.
- **ALL WEIGHTS MUST BE LOADED IDENTICALLY TO ENSURE PROPER CLUTCH BALANCE!**

If adjustment to the RPM is needed, generally we adjust by adding or subtracting from the Middle Weight Seat as the Seat closest to the Pin is usually close to full. The Middle Seat will be a smaller adjustment to the Top RPM whereas the Seat closest to the Tip will have a larger adjustment. So, more RPM is needed if using larger tires or higher elevation, whereas lower RPM is needed if using smaller tires and or lower elevation.

©2025 Superatv.com. All Rights Reserved

26.Then use tool to compress down the sheaves and tighten all three bolts to factory torque specs. See **Fig.26**.

27.Now replace the clutch back on the machine,**Fig.27a**, and install the Center Retaining Bolt (**Fig.27b)** and torque to Factory specifications.



Fig.26



Fig.27a



Fig.27b

28. Once the clutch is installed and secured with the retaining bolt, you can now screw the clutch tool into the clutch and screw in the tool bolt to loosen the clutch to put the belt back on the machine in the next step, See **Fig.28**.

29. Now install the belt back over the clutches making sure that the printed words on the belt are oriented so that you can read them facing you as shown in **Fig.29**. (same if using a new belt)



Fig.28



Fig.29

©2025 Superatv.com. All Rights Reserved

30. After the belt is on and the belt tool is taken off, spin the secondary sheaves clockwise several times as this helps seat the belt into proper location within the sheaves. See **Fig.30**.

31. Then reinstall the clutch cover and exit air hose. Tighten hose clamp and secure all screws on the cover. See **Fig.31**.

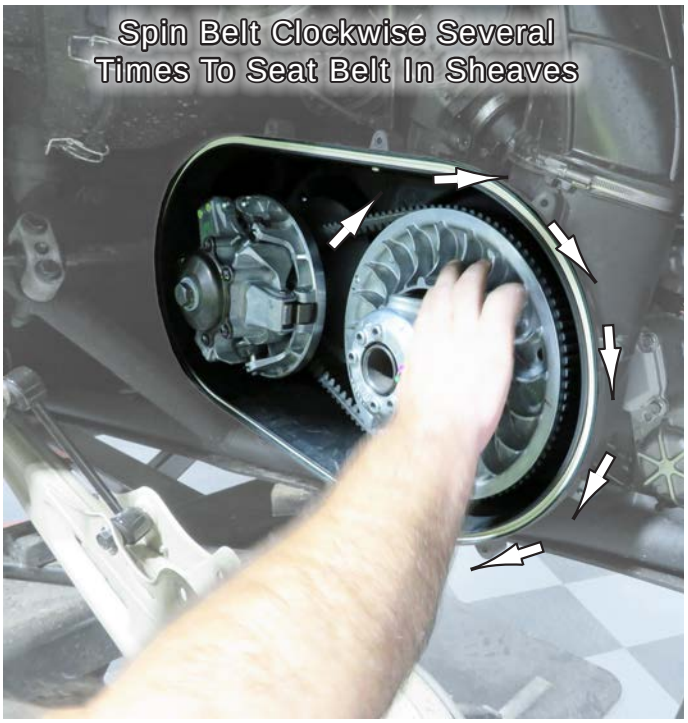

Fig.30

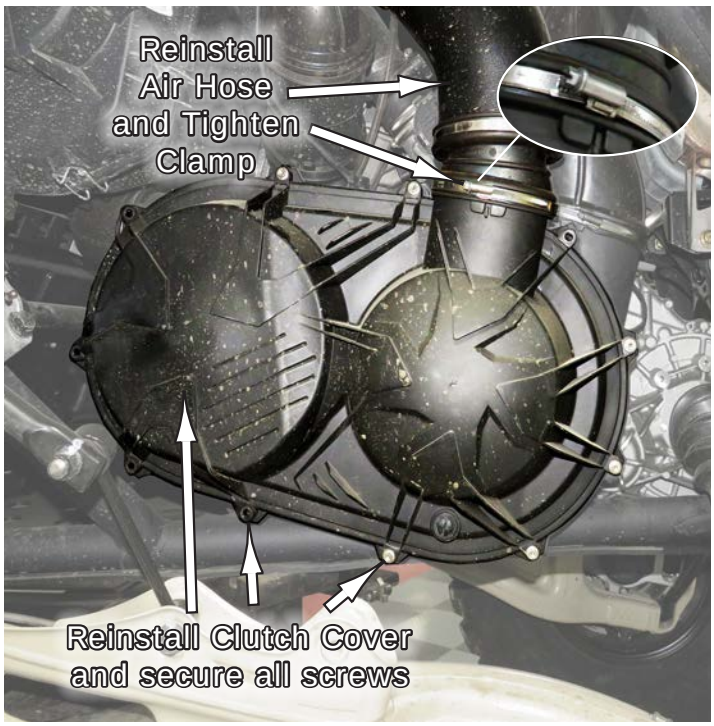

Fig.31

Liability Statement

SuperATV's® products are designed to best fit user's ATV/UTV under stock conditions. Adding, modifying, or fabricating any factory or aftermarket parts will void any warranty provided by SuperATV® and is not recommended. SuperATV's® products could interfere with other aftermarket accessories. If user has aftermarket products on machine, contact SuperATV® to verify that they will work together.

Although SuperATV® has thousands of satisfied customers, user should be aware that installing lift kits, long travel, or suspension kits, tires, etc. will change the ride of machine and may increase maintenance and part wear. Operating any off-road machine while, or after, consuming alcohol and/or drugs increases risk of bodily harm or death. No warranty or representation is made as to this product's ability to protect user from severe injury or death. SuperATV® urges operators and occupants to wear a helmet and appropriate riding gear at all times.

By purchasing and installing SuperATV® products, user agrees that should damages occur, SuperATV® will not be held responsible for loss of time, use, labor fees, replacement parts, or freight charges. SuperATV®, nor any 3rd party, will not be held responsible for any direct, indirect, incidental, special, or consequential damages that result from any product purchased from SuperATV®. The total liability of seller to user for all damages, losses, and causes of action, if any, shall not exceed the total purchase price paid for the product that gave rise to the claim.

SuperATV® will warranty only parts provided by SuperATV®. Any damage or problems with OEM housings, bearings, seals, or other manufacturers' products will not be covered by SuperATV®. SuperATV® parts and products are not warrantied if item was not installed properly, misused, or modified.

Installing, adding, modifying, or fabricating any factory or aftermarket product to your ATV/UTV may violate certain local, state, and federal laws. Be advised that laws vary depending on town, city, county, state, etc. Use of certain products on public streets, roads, or highways may be in violation law. The Buyer is solely and exclusively legally and personally responsible for any violation of the law by the installation or use of the product. You must abide by all local, state, and federal laws, including but not limited to vehicle safety, traffic laws, and ordinances. It is your responsibility to know the laws and how they apply to you.

The Buyer is responsible to fully understand the capability and limitations of his/her vehicle according to manufacturer specifications, warnings and instructions and agrees to hold SuperATV® harmless from any damage resulting from failure to adhere to such specifications, warnings and/ or instructions. The Buyer is also responsible to obey all applicable federal, state, and local laws and ordinances when operating his/her vehicle while using this product, and the Buyer agrees to hold SuperATV® harmless from any violation thereof.

If you have any problems or questions on this kit, contact us by email at Superatv.com.

Need help with your installation?

sales@superatv.com

www.superatv.com

1-855-743-3427

8:00am - 9:00pm EST M-Th
8:00am - 7:00pm EST Friday
9:00am - 2:00pm EST Saturday

Like SuperATV on Facebook to keep up to date on new products!

©2025 Superatv.com. All Rights Reserved