2753 Michigan Road • Madison, Indiana 47250 • 855-743-3427

INSTALLATION INSTRUCTIONS

2” Lift Kit: for Can-Am Renegade

Item	Description	Qty
A	Rear Bracket	4
B	Steering Stop	1
C	Front Bracket	1

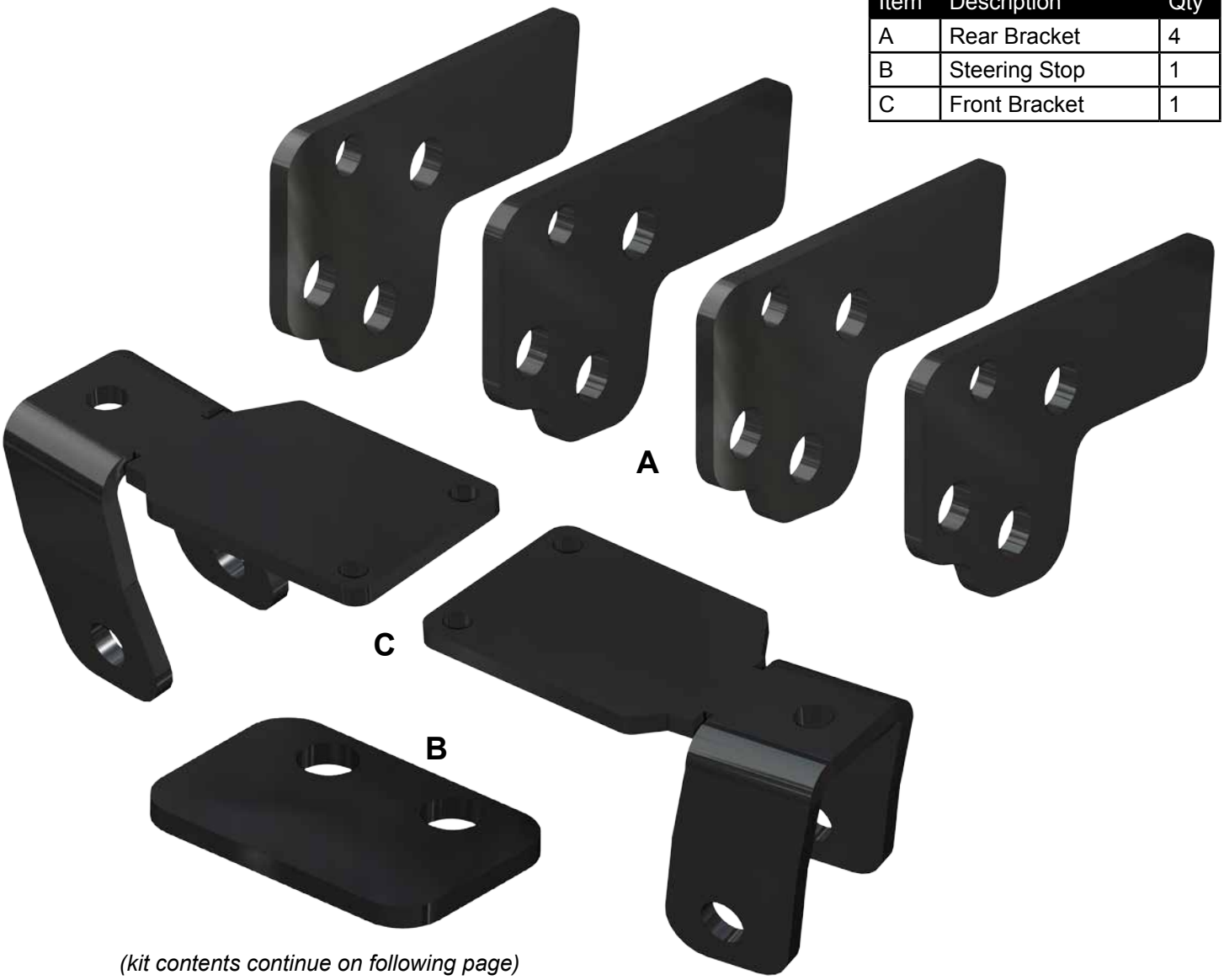

(kit contents continue on following page)

Need help with your installation?

sales@superatv.com

www.superatv.com

1-855-743-3427

8:00am - 9:00pm EST M-Th
8:00am - 7:00pm EST Friday
9:00am - 2:00pm EST Saturday

Read instructions and view illustrations before beginning.

Thank You For Choosing

© 2013 SuperATV.com®. All Rights Reserved.

Rev IN-LK-CA-REN-2 12/7/2017

2x 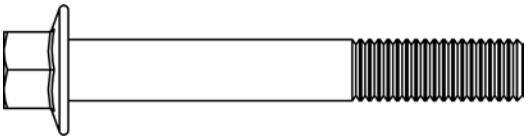 **M8-1.25 x 60mm Lg. FHCS**

2x 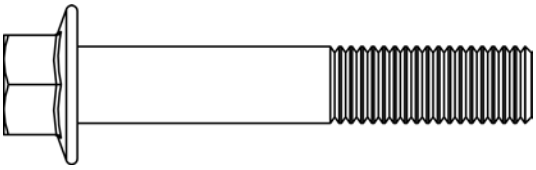 **M10-1.50 x 60mm Lg. FHCS**

2x 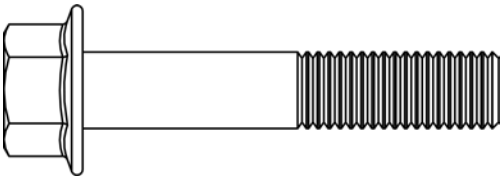 **M10-1.50 x 55mm Lg. FHCS**

2x 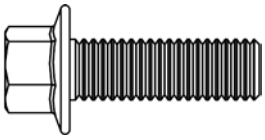 **M8-1.25 x 25mm Lg. FHCS**

4x  **M5-.8 x 20mm Lg. FHCS**

2x 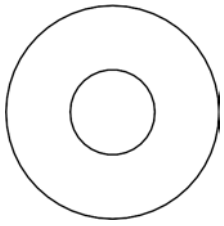 **M10 Flat Washer**

2x  **Ø13mm OD x 30mm Lg. Spacer**

2x  **Ø18mm OD x 27mm Lg. Spacer**

4x  **M5-.8 Nylock Nut**

4x  **M8-1.25 Nylock Nut**

2x 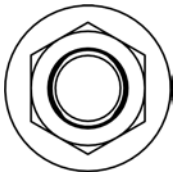 **M10-1.50 Nylock Nut**

2x  **M10-1.50 Nylock Nut, Thin**

Rear: *Do not tighten hardware completely unless noted. Keep all components removed.*

- Raise rear of machine off ground, secure with jack stands, remove Wheels, and disconnect Shocks from Mount.
- Remove Air Lines from Mount.
- Drill out hole in Mount as shown. ***Only left side will be drilled.*** Use a Ø8mm Drill Bit.



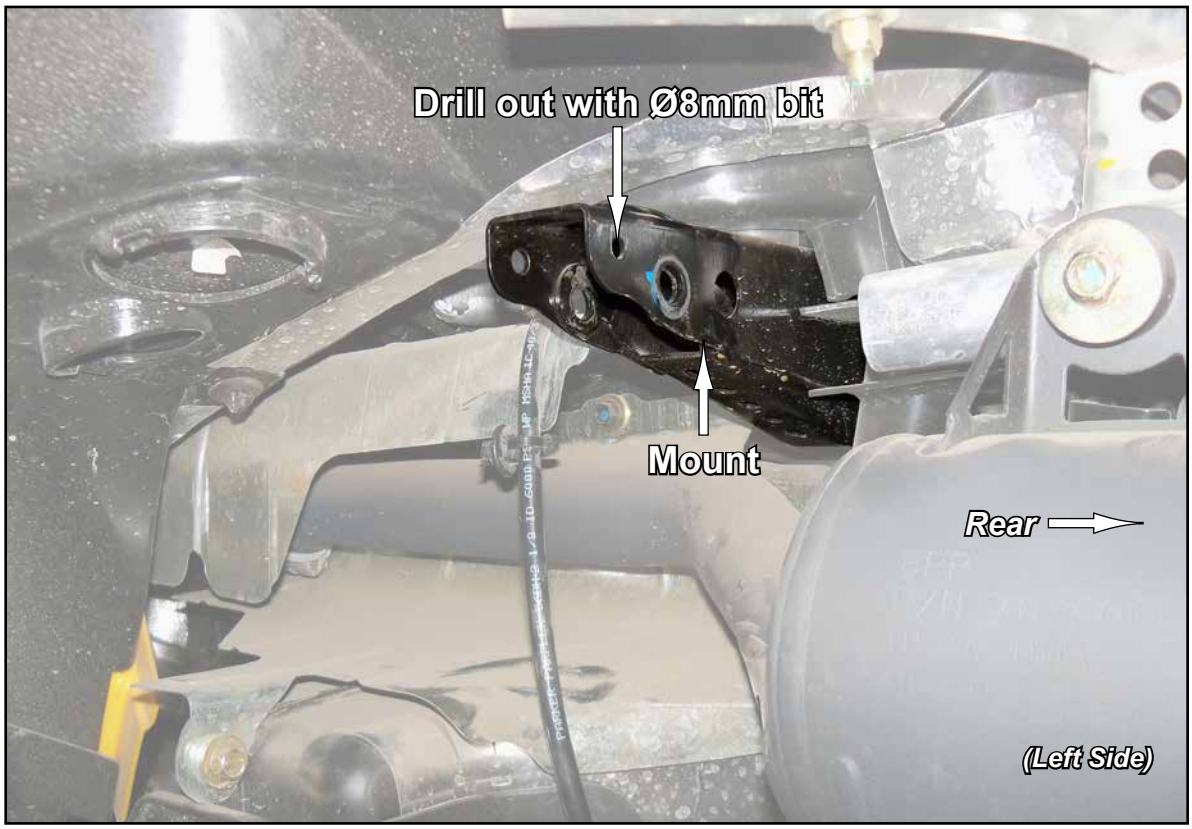

Rear continued:

- Install Rear Brackets (A) to Mount. Fore Rear Bracket (A) to *inside* of Mount and aft Rear Bracket (A) to *outside* of Mount. M10 Flat Washer will go between Mount and Rear Bracket (A).
- Secure with Spacers and hardware shown.
- Install Shocks to Rear Brackets (A) with hardware shown.
- Tighten all hardware completely.

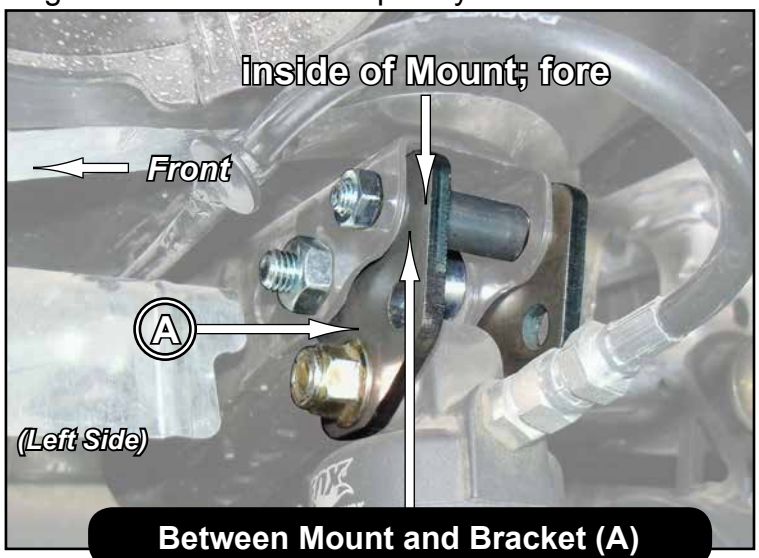

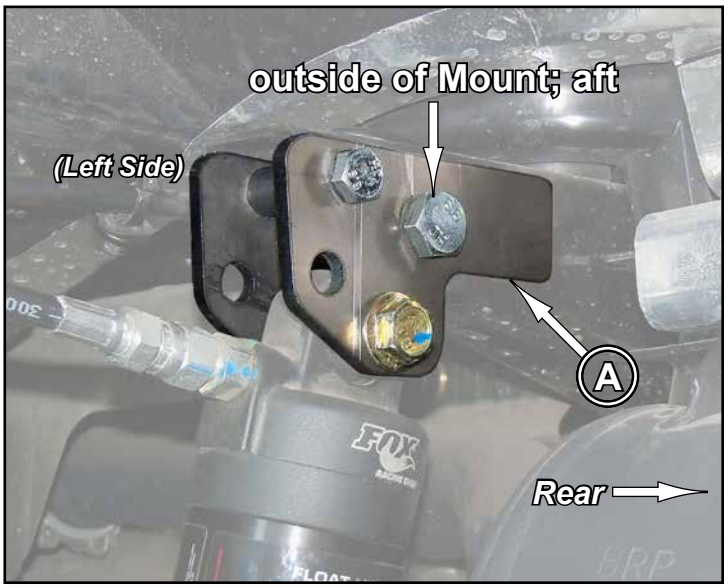

Between Mount and Bracket (A)

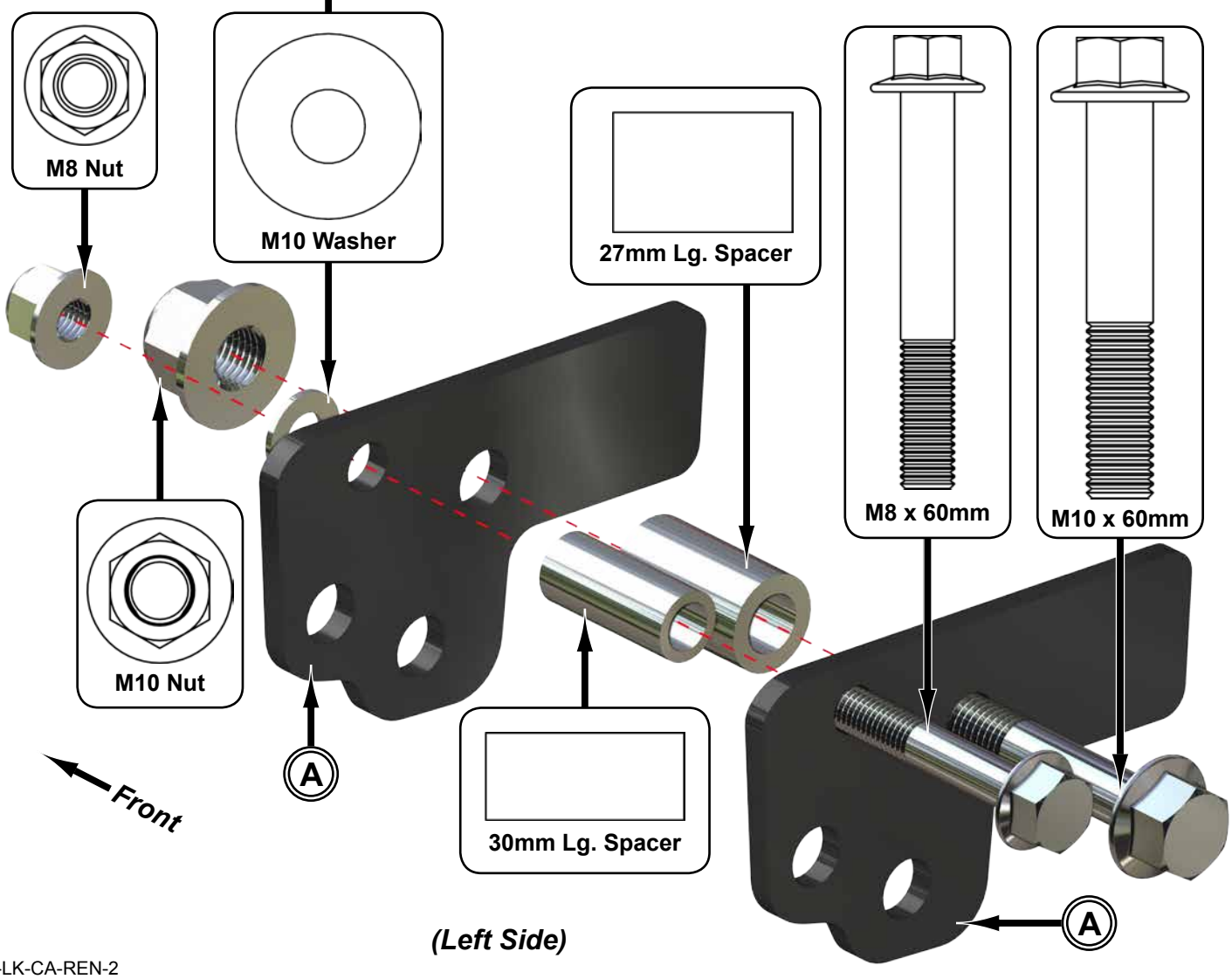

(Left Side)

Front: *Do not tighten hardware completely unless noted. Keep all components removed.*

- Raise front of machine off ground, secure with jack stands and remove Wheels and Shocks.
- Remove Center Plastic and Inner Fenders.
- Remove Mount hardware.







Front continued:

- Drill out Rivet, remove hardware, and pull Mount from machine.
- Repeat for opposite side.
- Remove Tie Rods from Steering Post, and install Steering Stop (B) and Tie Rods to Steering Post with stock hardware.

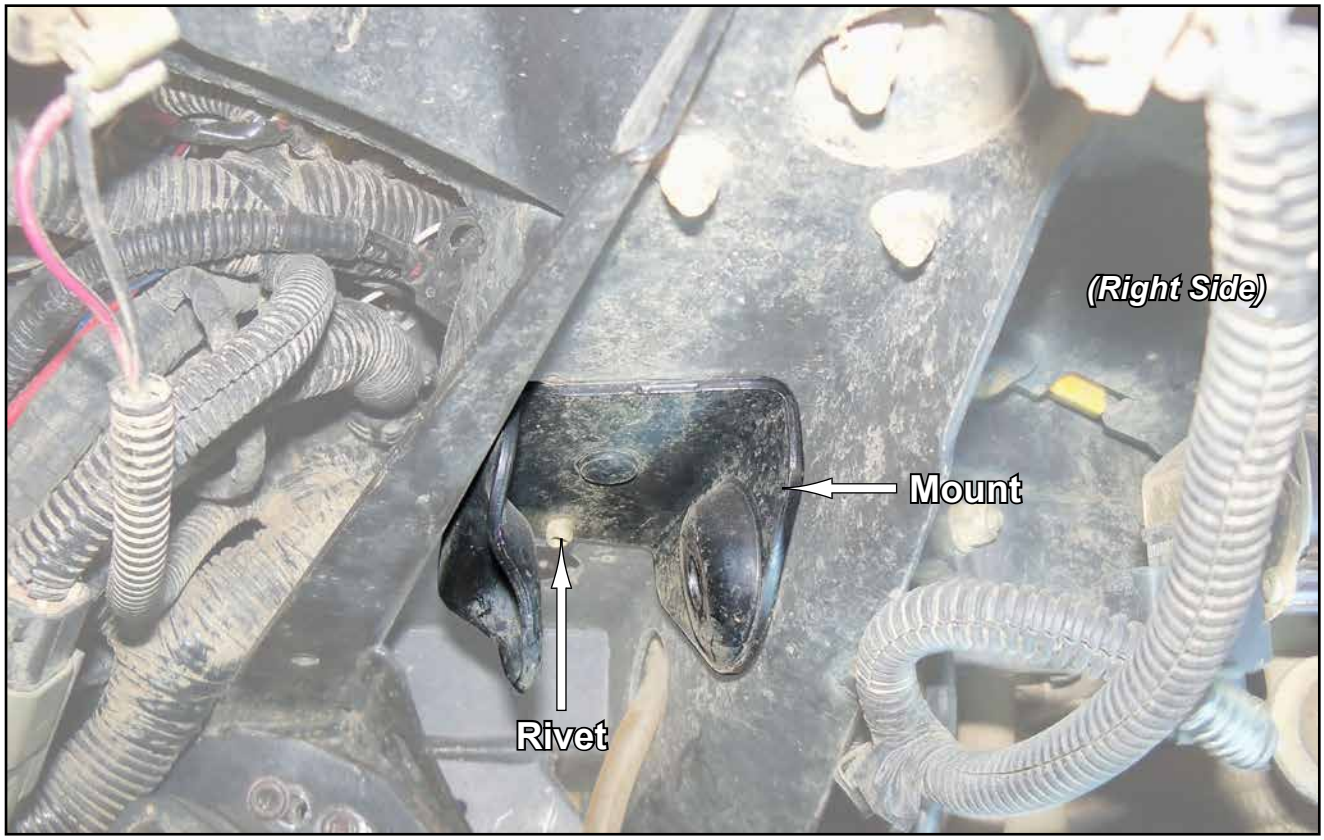

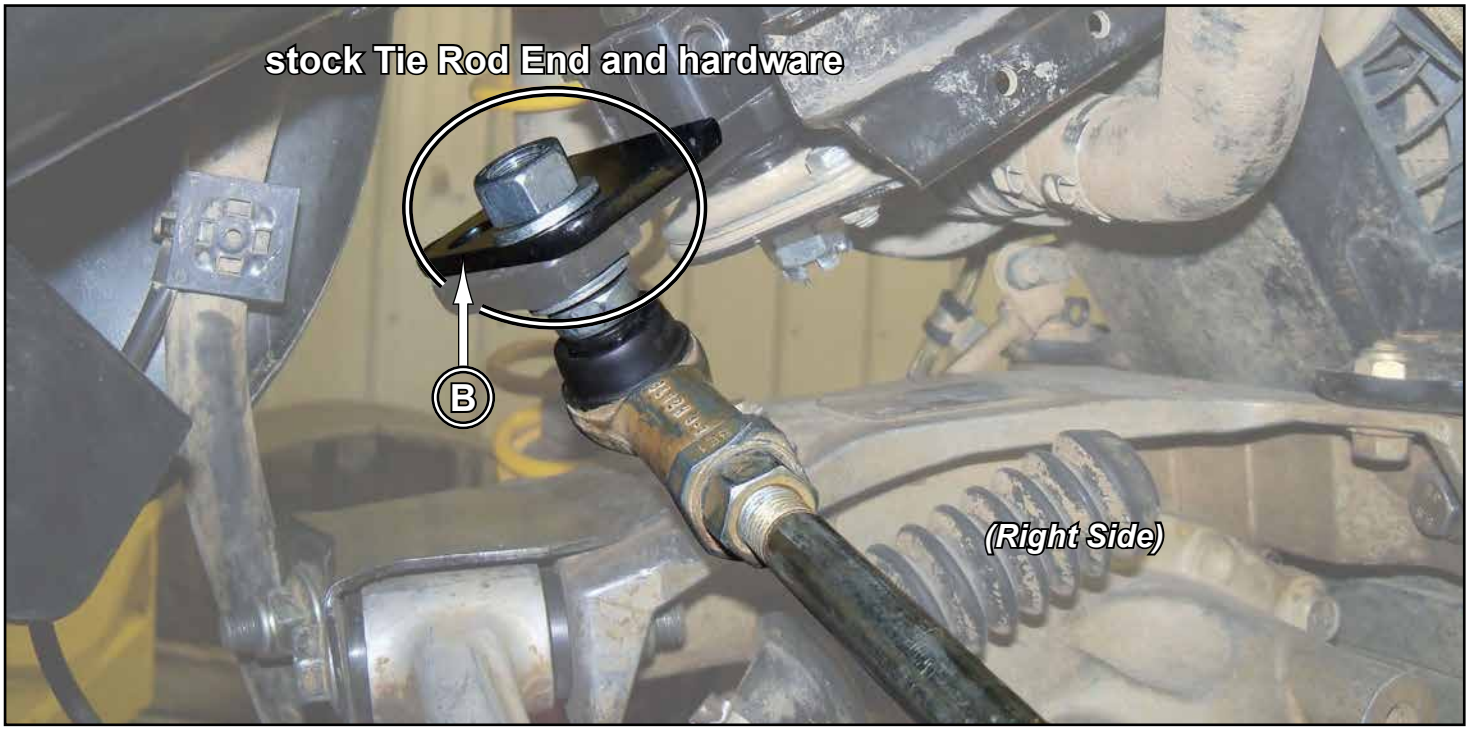

Front continued:

- Install Front Brackets (C) to Frame with hardware shown.
- Install Shocks to Front Brackets (C) with hardware shown.
- Tighten all hardware completely.

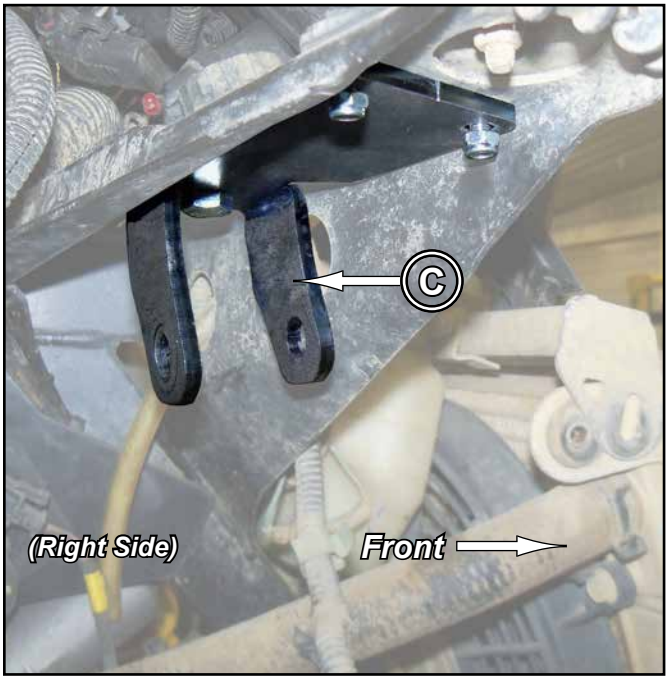

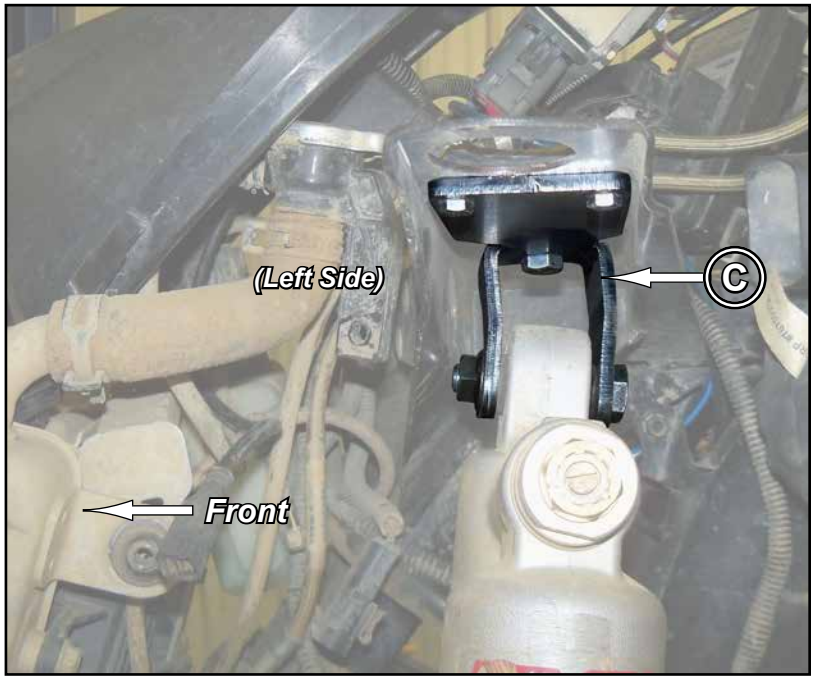

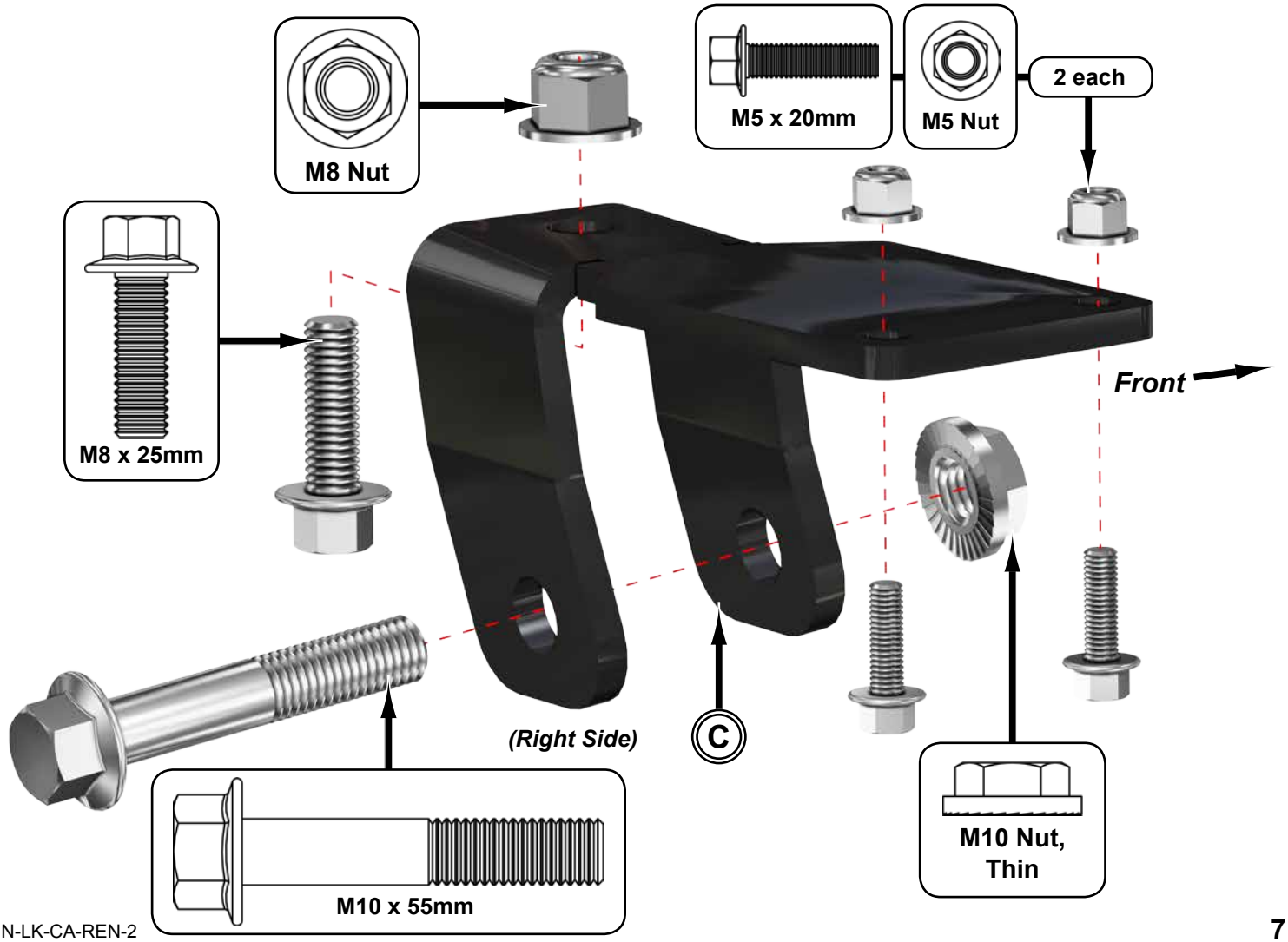

Liability Statement

SuperATV's® products are designed to best fit user's ATV/UTV under stock conditions. Adding, modifying, or fabricating any factory or aftermarket parts will void any warranty provided by SuperATV® and is not recommended. SuperATV's® products could interfere with other aftermarket accessories. If user has aftermarket products on machine, contact SuperATV® to verify that they will work together.

Although SuperATV® has thousands of satisfied customers, user should be aware that installing lift kits, long travel, or suspension kits, tires, etc. will change the ride of machine and may increase maintenance and part wear. Operating any off-road machine while, or after, consuming alcohol and/or drugs increases risk of bodily harm or death. No warranty or representation is made as to this product's ability to protect user from severe injury or death. SuperATV® urges operators and occupants to wear a helmet and appropriate riding gear at all times.

By purchasing and installing SuperATV® products, user agrees that should damages occur, SuperATV® will not be held responsible for loss of time, use, labor fees, replacement parts, or freight charges. SuperATV®, nor any 3rd party, will not be held responsible for any direct, indirect, incidental, special, or consequential damages that result from any product purchased from SuperATV®. The total liability of seller to user for all damages, losses, and causes of action, if any, shall not exceed the total purchase price paid for the product that gave rise to the claim.

SuperATV® will warranty only parts provided by SuperATV®. Any damage or problems with OEM housings, bearings, seals, or other manufacturers' products will not be covered by SuperATV®. SuperATV® parts and products are not warrantied if item was not installed properly, misused, or modified.

Installing, adding, modifying, or fabricating any factory or aftermarket product to your ATV/UTV may violate certain local, state, and federal laws. Be advised that laws vary depending on town, city, county, state, etc. Use of certain products on public streets, roads, or highways may be in violation law. The Buyer is solely and exclusively legally and personally responsible for any violation of the law by the installation or use of the product. You must abide by all local, state, and federal laws, including but not limited to vehicle safety, traffic laws, and ordinances. It is your responsibility to know the laws and how they apply to you.

The Buyer is responsible to fully understand the capability and limitations of his/her vehicle according to manufacturer specifications, warnings and instructions and agrees to hold SuperATV® harmless from any damage resulting from failure to adhere to such specifications, warnings and/ or instructions. The Buyer is also responsible to obey all applicable federal, state, and local laws and ordinances when operating his/her vehicle while using this product, and the Buyer agrees to hold SuperATV® harmless from any violation thereof.