2753 Michigan Road • Madison, Indiana 47250 • 855-743-3427

INSTALLATION INSTRUCTIONS

5” Long Travel Kit
5” Lift Kit
:for Polaris RZR®

- **Front Sway Bar will be deleted with installation of this kit.**
- **A Press or Ball Joint tool is required to remove and install Ball Joints.**
- **1.5” Offset A-Arms shown in installation illustrations.**
- **Do not discard packaging until product has been successfully installed.**



Item	Description
A	Front Upper Left
B	Front Upper Right
C	Front Lower Left
D	Front Lower Right
E	Brake Line Clip x 4
F	Brake Line (Rear)
G	Brake Line (Front)
H	Grease Fitting x 12



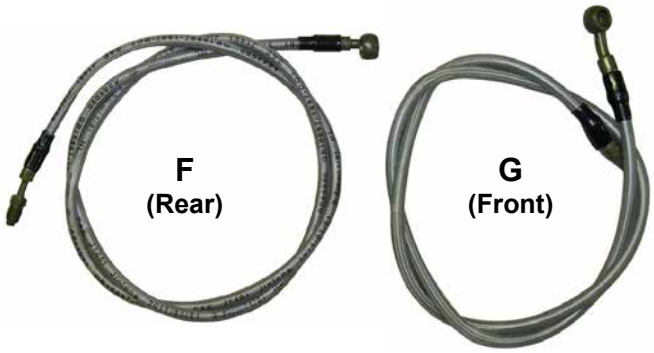

Front (G) has same style fittings at each end

(Kit Contents continue on following pages)

Need help with your installation?

sales@superatv.com

www.superatv.com

1-855-743-3427

8:00am - 8:00pm EST M-Th
8:00am - 7:00pm EST Friday
9:00am - 2:00pm EST Saturday

Read instructions and view illustrations before beginning.

Thank You For Choosing

© 2013 SuperATV.com®. All Rights Reserved.

Rev IN-LTK-P-RZR-5-1.5-HC 4/19/2013

(Kit Contents continued)

Item	Description
K	Rear Upper Left
L	Rear Upper Right
M	Rear Lower Left
N	Rear Lower Right

1.5” Offset A-Arms

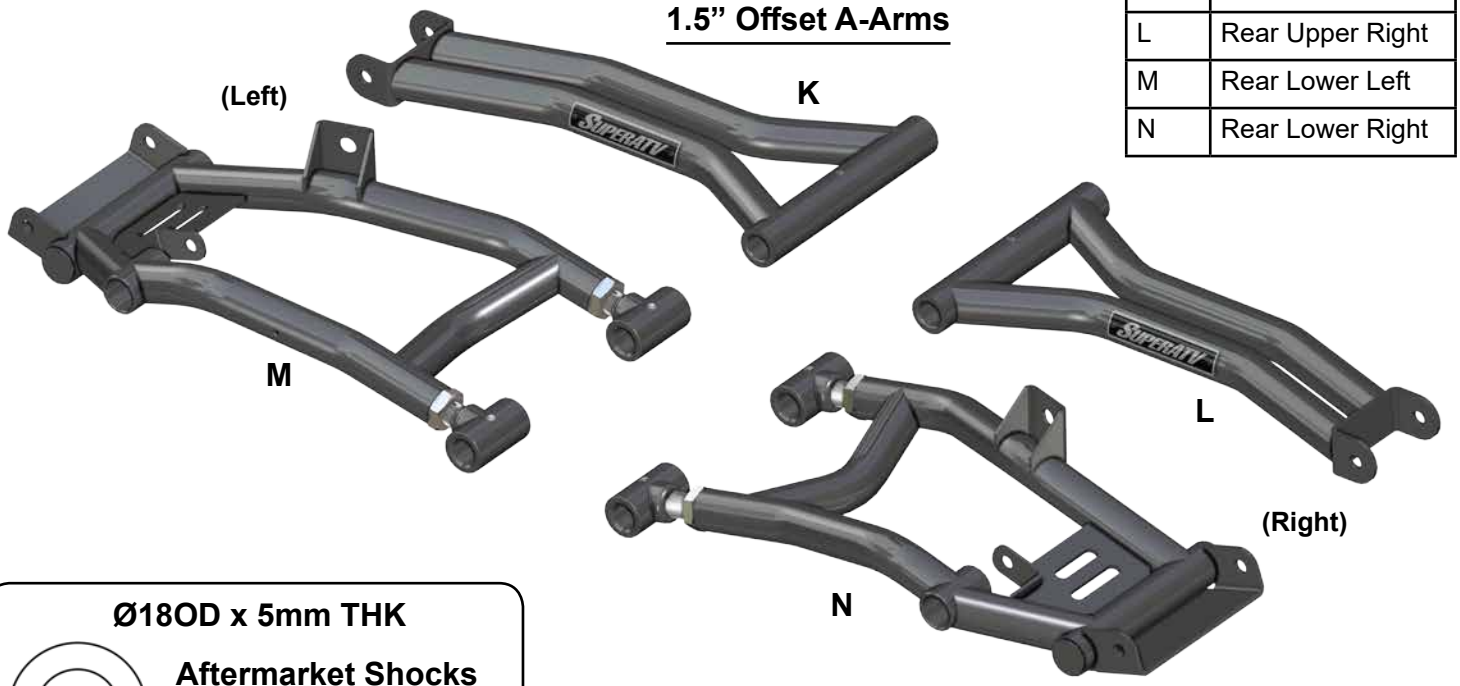

Ø18OD x 5mm THK

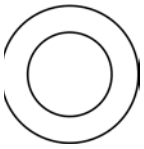

Aftermarket Shocks may require usage of provided Spacers.

Small Boot



Large Boot



Tie Rod Kit*

Depending on application Straight or Z-Bend Tie Rods will be used. Lift Kit use Z-Bend Tie Rods and Long Travel Kits use straight.

Tie Rod x 2





Ball and Socket x 2

Wire Tie



(2 long and 2 short)

Zero Offset A-Arms

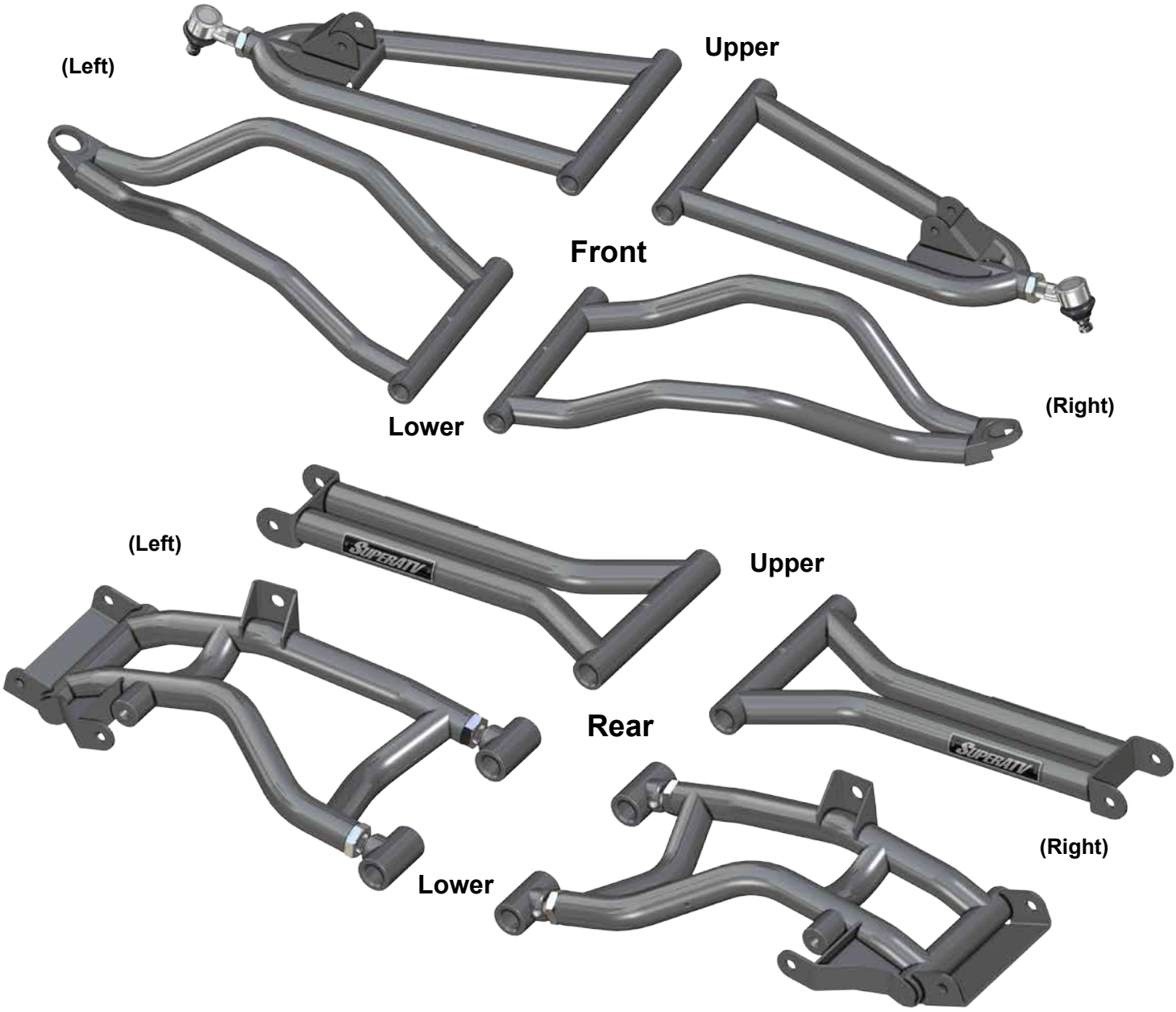

Liability Statement

SuperATV's® products are designed to best fit user's ATV/UTV under stock conditions. Adding, modifying, or fabricating any factory or aftermarket parts will void any warranty provided by SuperATV® and is not recommended. SuperATV's® products could interfere with other aftermarket accessories. If user has aftermarket products on machine, contact SuperATV® to verify that they will work together.

Although SuperATV® has thousands of satisfied customers, user should be aware that installing lift kits, long travel, or suspension kits, tires, etc. will change the ride of machine and may increase maintenance and part wear. Operating any off-road machine while, or after, consuming alcohol and/or drugs increases risk of bodily harm or death. No warranty or representation is made as to this product's ability to protect user from severe injury or death. SuperATV® urges operators and occupants to wear a helmet and appropriate riding gear at all times.

By purchasing and installing SuperATV® products, user agrees that should damages occur, SuperATV® will not be held responsible for loss of time, use, labor fees, replacement parts, or freight charges. SuperATV®, nor any 3rd party, will not be held responsible for any direct, indirect, incidental, special, or consequential damages that result from any product purchased from SuperATV®. The total liability of seller to user for all damages, losses, and causes of action, if any, shall not exceed the total purchase price paid for the product that gave rise to the claim.

SuperATV® will warranty only parts provided by SuperATV®. Any damage or problems with OEM housings, bearings, seals, or other manufacturers' products will not be covered by SuperATV®. SuperATV® parts and products are not warrantied if item was not installed properly, misused, or modified.

Installing, adding, modifying, or fabricating any factory or aftermarket product to your ATV/UTV may violate certain local, state, and federal laws. Be advised that laws vary depending on town, city, county, state, etc. Use of certain products on public streets, roads, or highways may be in violation law. The Buyer is solely and exclusively legally and personally responsible for any violation of the law by the installation or use of the product. You must abide by all local, state, and federal laws, including but not limited to vehicle safety, traffic laws, and ordinances. It is your responsibility to know the laws and how they apply to you.

The Buyer is responsible to fully understand the capability and limitations of his/her vehicle according to manufacturer specifications, warnings and instructions and agrees to hold SuperATV® harmless from any damage resulting from failure to adhere to such specifications, warnings and/ or instructions. The Buyer is also responsible to obey all applicable federal, state, and local laws and ordinances when operating his/her vehicle while using this product, and the Buyer agrees to hold SuperATV® harmless from any violation thereof.

Front Removal: *Keep all components removed from machine.*

- Raise Front of machine off ground and secure with jack stands.
- Remove Wheels.
- Remove Brake Calipers from Spindles and hang out of way.
- Remove Brake Lines.
- Remove Tie Rods from machine.
- Remove Shocks from machine.
- Remove Spindles and Axles.
- Remove stock Upper and Lower A-Arms from Frame.
- Remove stock Bushings, Sleeves, and Ball Joints from A-Arms.

Front A-Arms prep:

- Install stock Ball Joints, Bushings, and Sleeves, or SuperATV Poly Bushing Kit, into A-Arms (A-D).
- Install Grease Fittings (H) into A-Arms (A-D).



(Right)

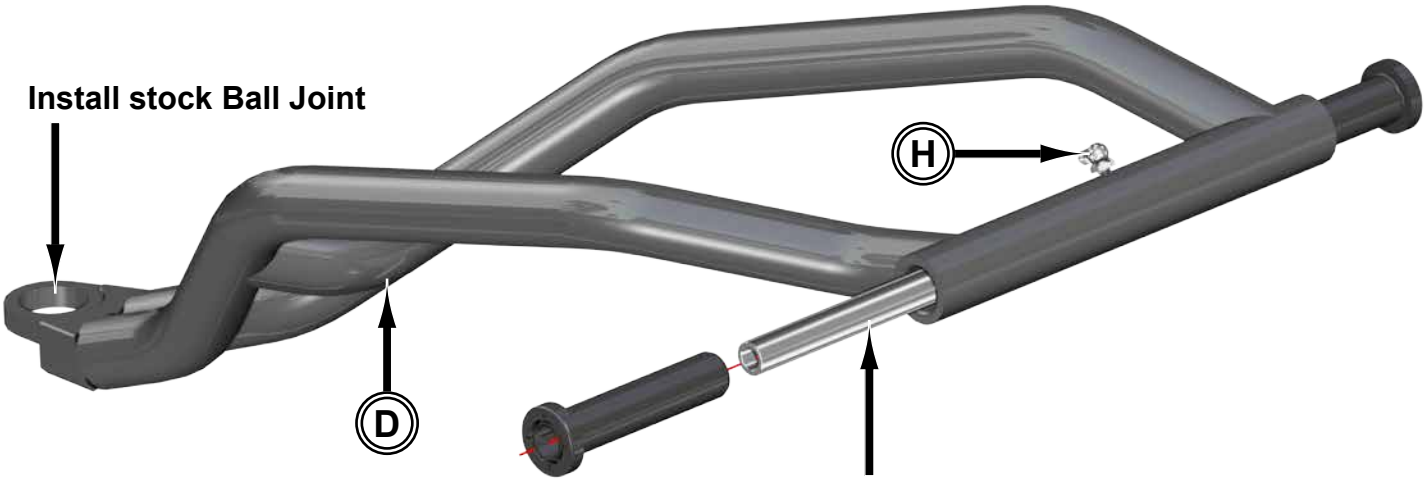

Install stock Bearings or SuperATV Poly Bushing Kit into A-Arms (A-D)

ARM SETTINGS

- Place new A-Arms onto a flat surface and verify dimension shown.
- *Negative 1° camber setting is achieved when Pivot Blocks are set to this dimension.*
- See last page for additional camber information.

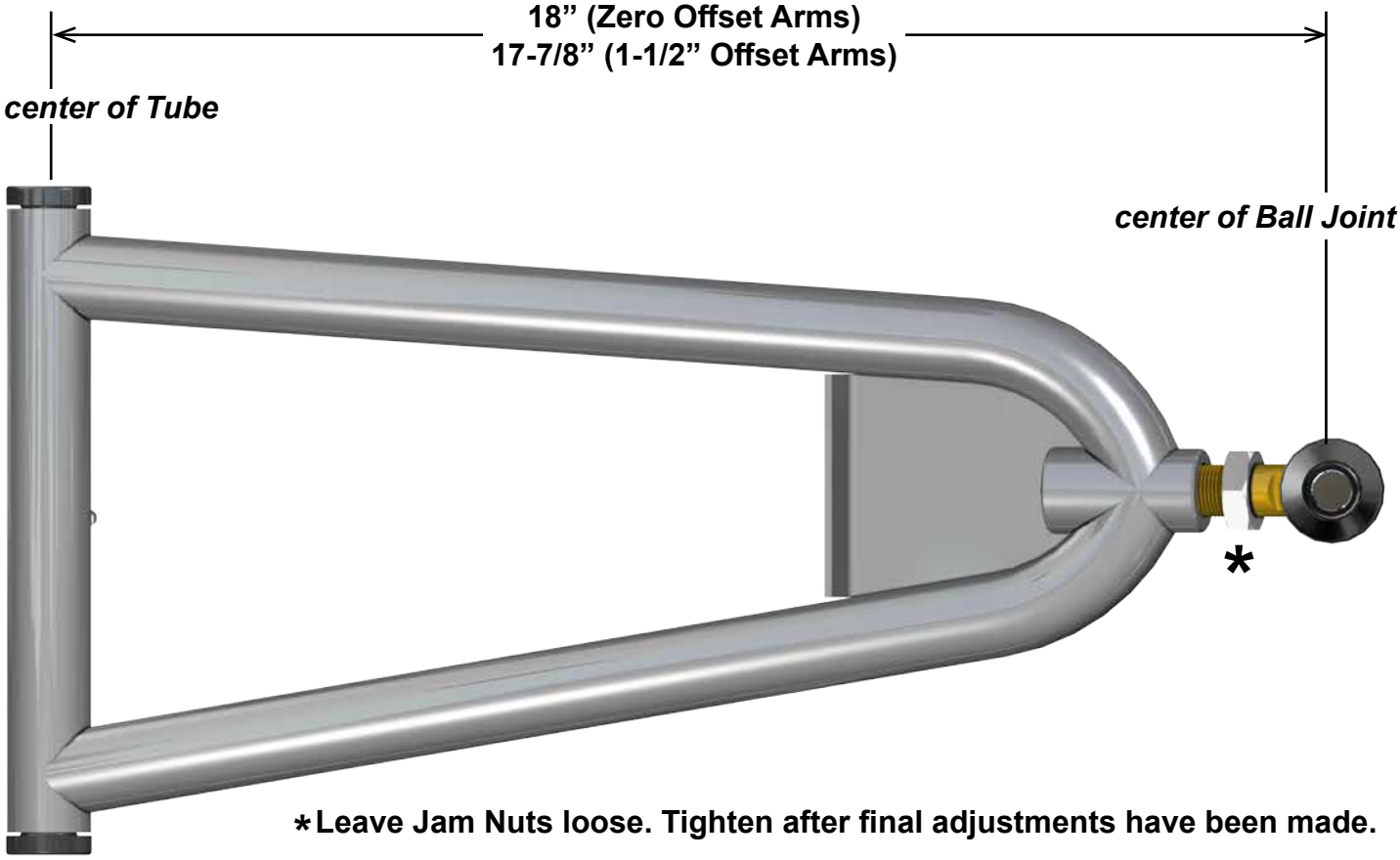

***Leave Jam Nuts loose. Tighten after final adjustments have been made.**

Differential Spacer installation:

- Remove hardware shown from Differential.
- Pry Differential up and slide Differential Spacers underneath Differential.
- Determine correct hardware and secure Differential Spacers.
- Tighten hardware completely.

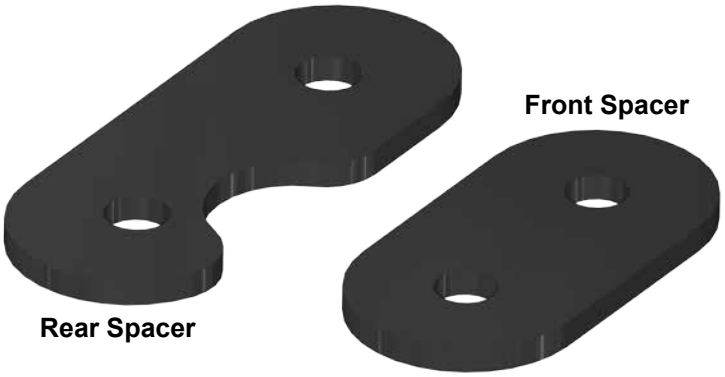

2010 and Older

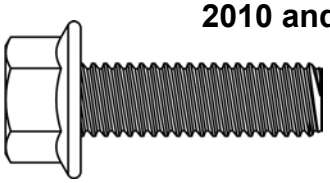

2011 and Newer

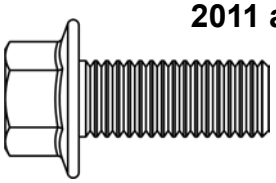

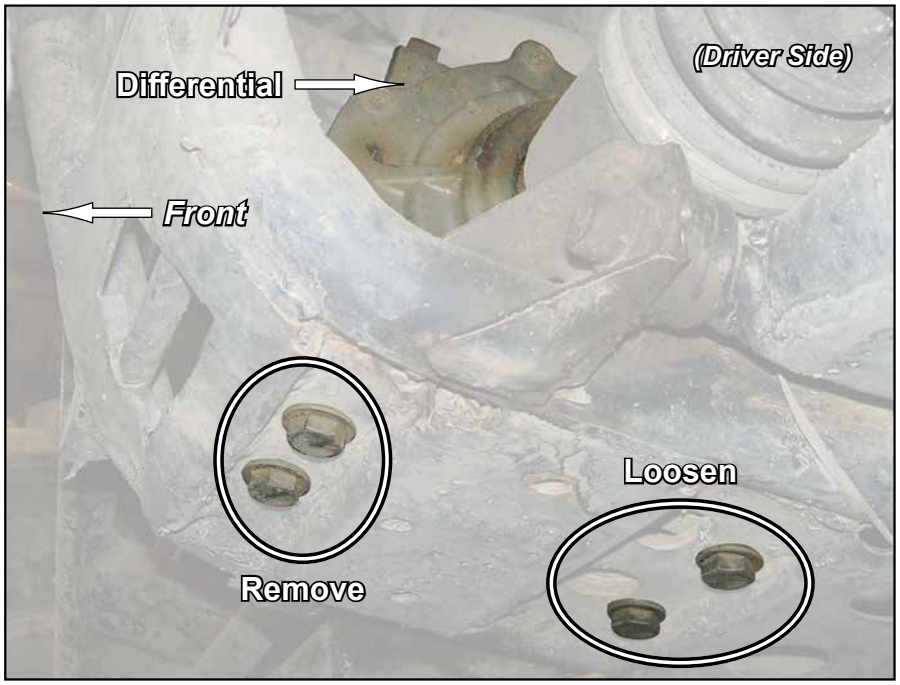

- Slide Spacers under Differential and secure with hardware shown.

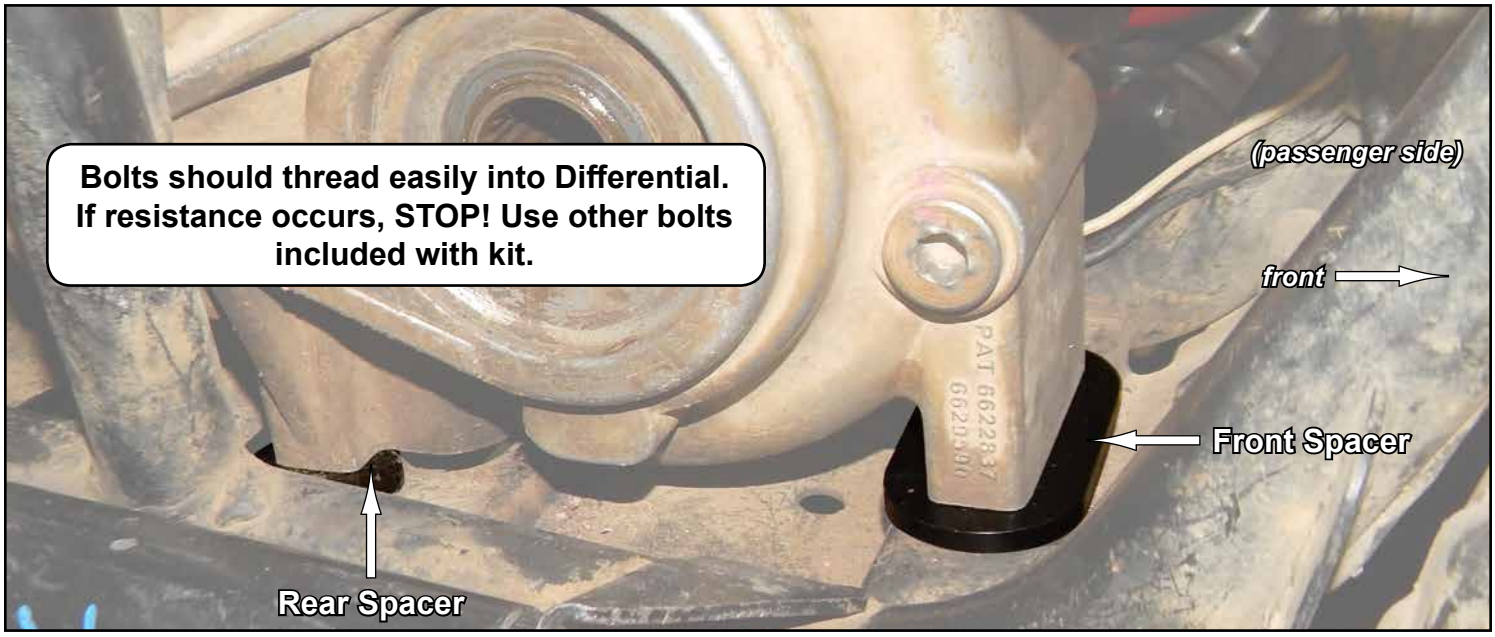

- If installing Steering Stop, install Tie Rods *before* reinstalling Boots and Wire Ties.
- Steering Stops not included with Zero Offset A-Arms.

Steering Stop installation (optional): *Driver Side installation is shown.*

- Install Bushing onto shaft.
- Repeat steps for opposite side.

(Rack and Pinion shown off machine for clarity)

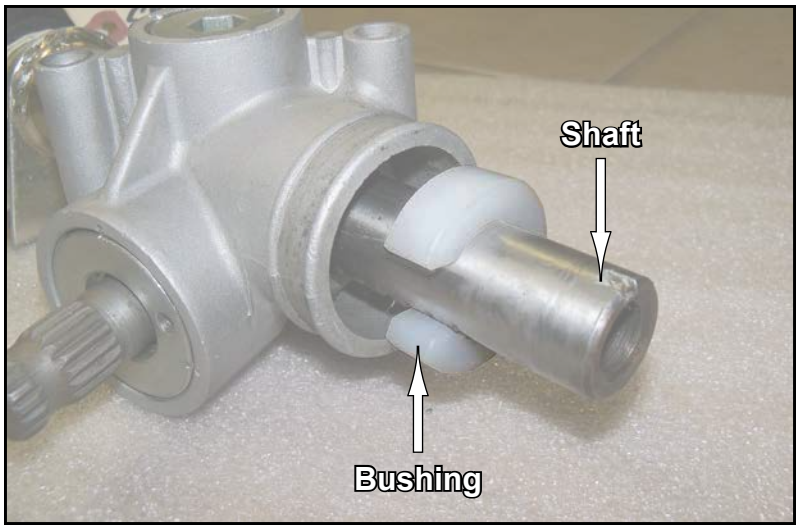

Tie Rod installation: *(Rack and Pinion shown off machine for clarity)*

- Install Ball and Socket to Rack and Pinion. **Use Loctite**.
- Remove, and keep, Jam Nut from Ball and Socket.
- Install Boot to Ball and Socket.
- Reinstall Jam Nut and install Shaft to Ball and Socket.
- Secure Boot with supplied Wire Ties.
- Install supplied Tie Rod End to Shaft.
- Repeat steps for opposite side.

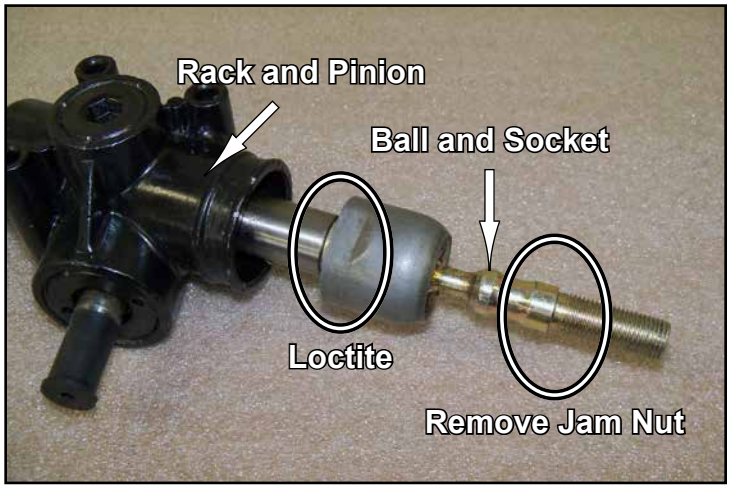

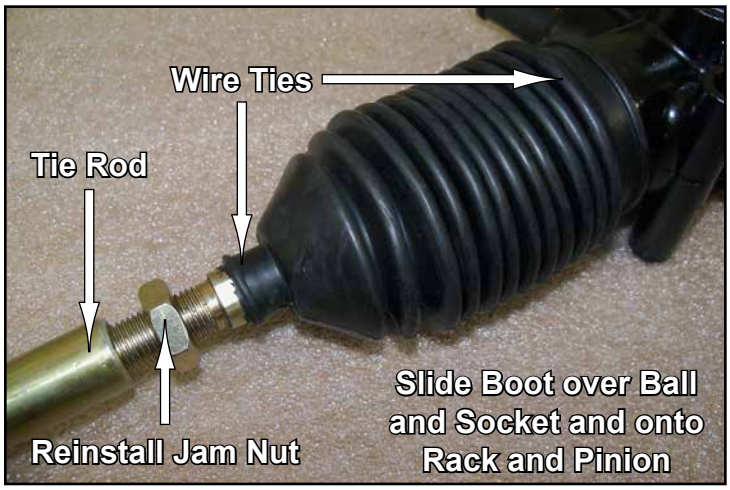

Depending on application, Straight or Z-Bend Shafts will be included.

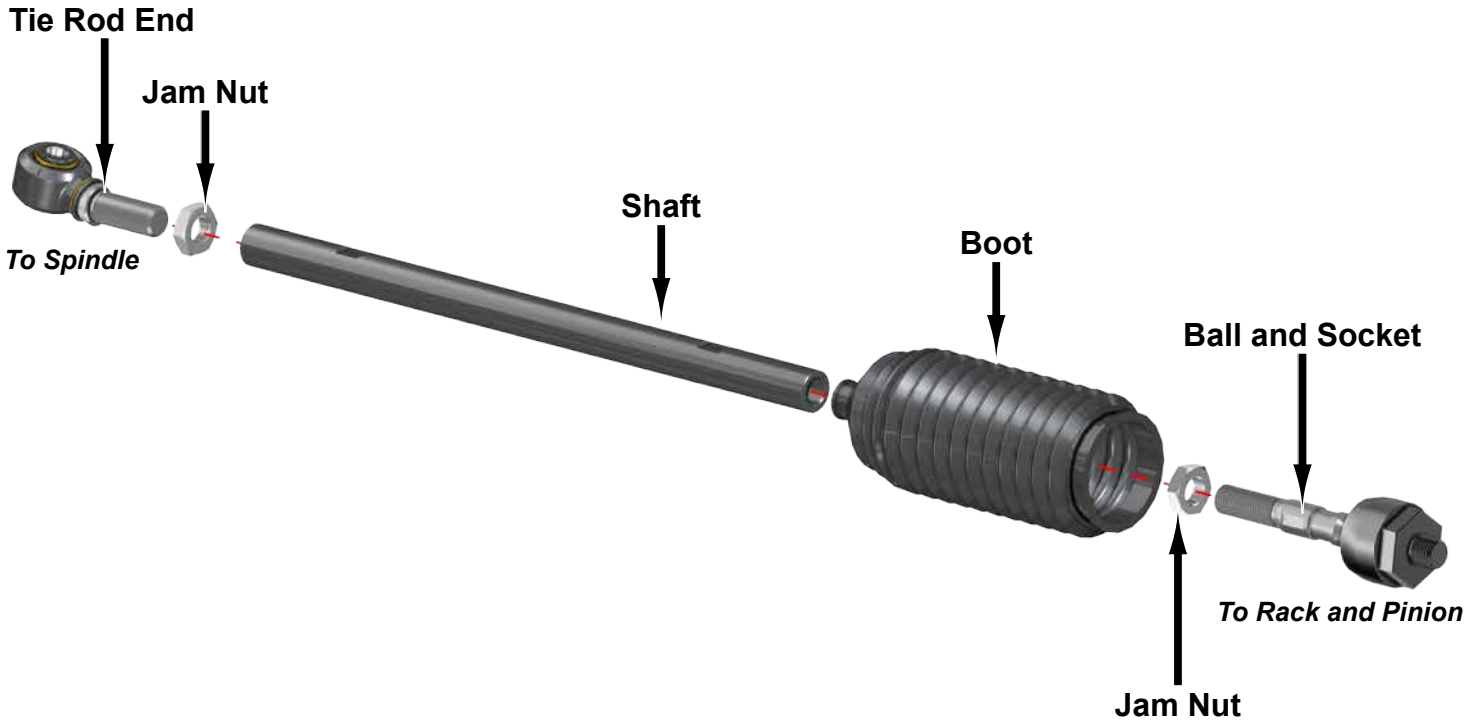

Front installation:

- Install Axles.
- Install A-Arms (A-D) to machine with stock hardware. SuperATV recommends using Loc-Tite on Nuts when installing.
- Remove Passenger and Driver side Brake Lines; install Passenger side to Driver side.
- Install Brake Line, Front (G) to Passenger side.
- Reinstall necessary components with stock hardware; tighten completely.
- Secure Tie Rod Ends to stock locations with hardware shown:

  Reinstall to *bottom* side of Spindle Steering Arm for RZR 800 2 seater and RZR S 800 2 seater.
  Reinstall to *top* side for RZR 4 800 4 seater.

- Ensure no binding can occur and secure Brake Lines with hardware shown.

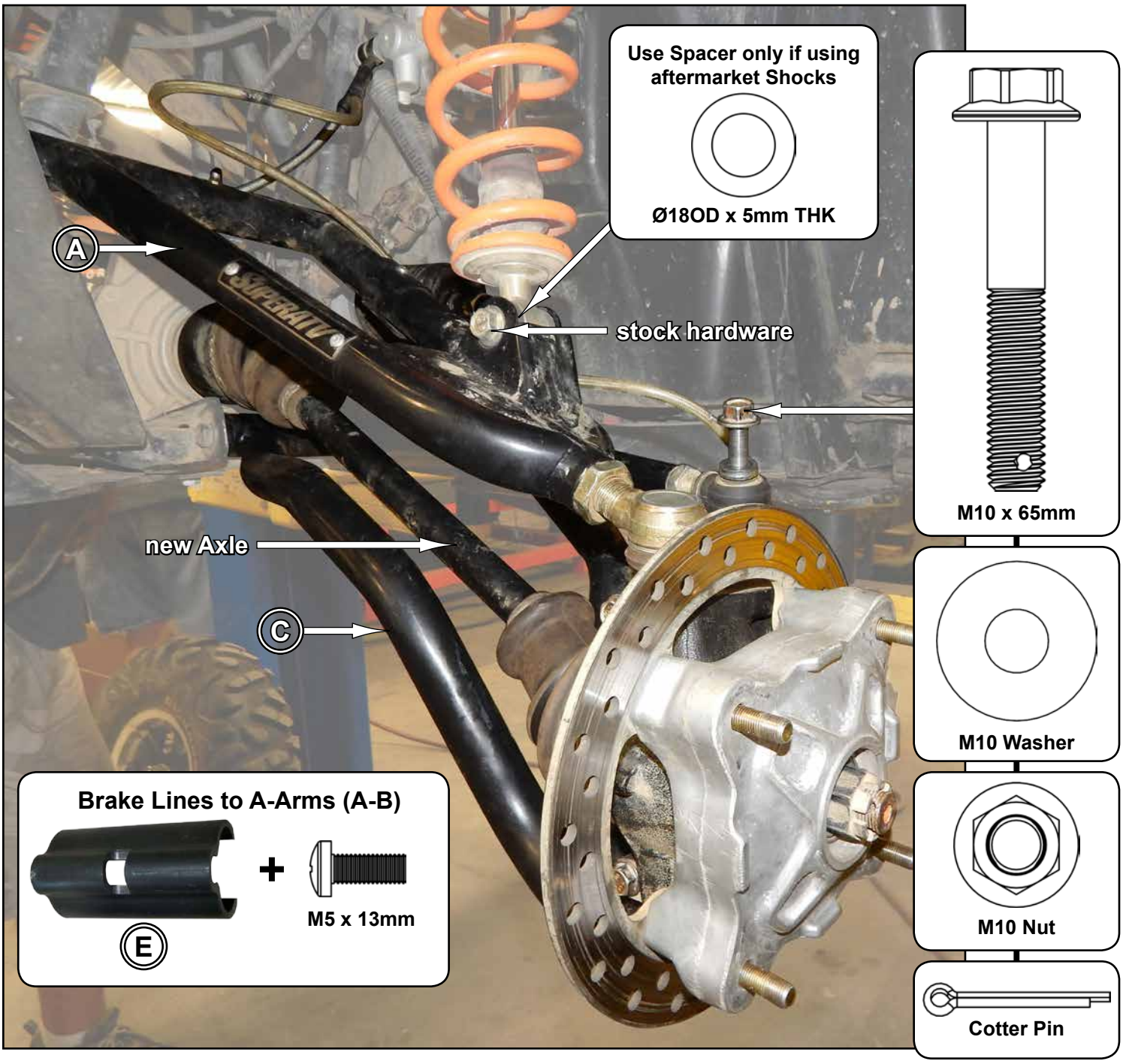

Rear Removal: *Keep all components removed from machine.*

- Raise Rear of machine off ground, secure with jack stands.
- Remove Wheels.
- Remove Brake Calipers and Brake Lines.
- Remove Shocks from machine.
- Remove Spindles and Axles.
- Remove A-Arms from Frame.
- Remove stock Bushings, Sleeves, and Ball Joints from A-Arms.
- Remove Sway Bar and components from machine.

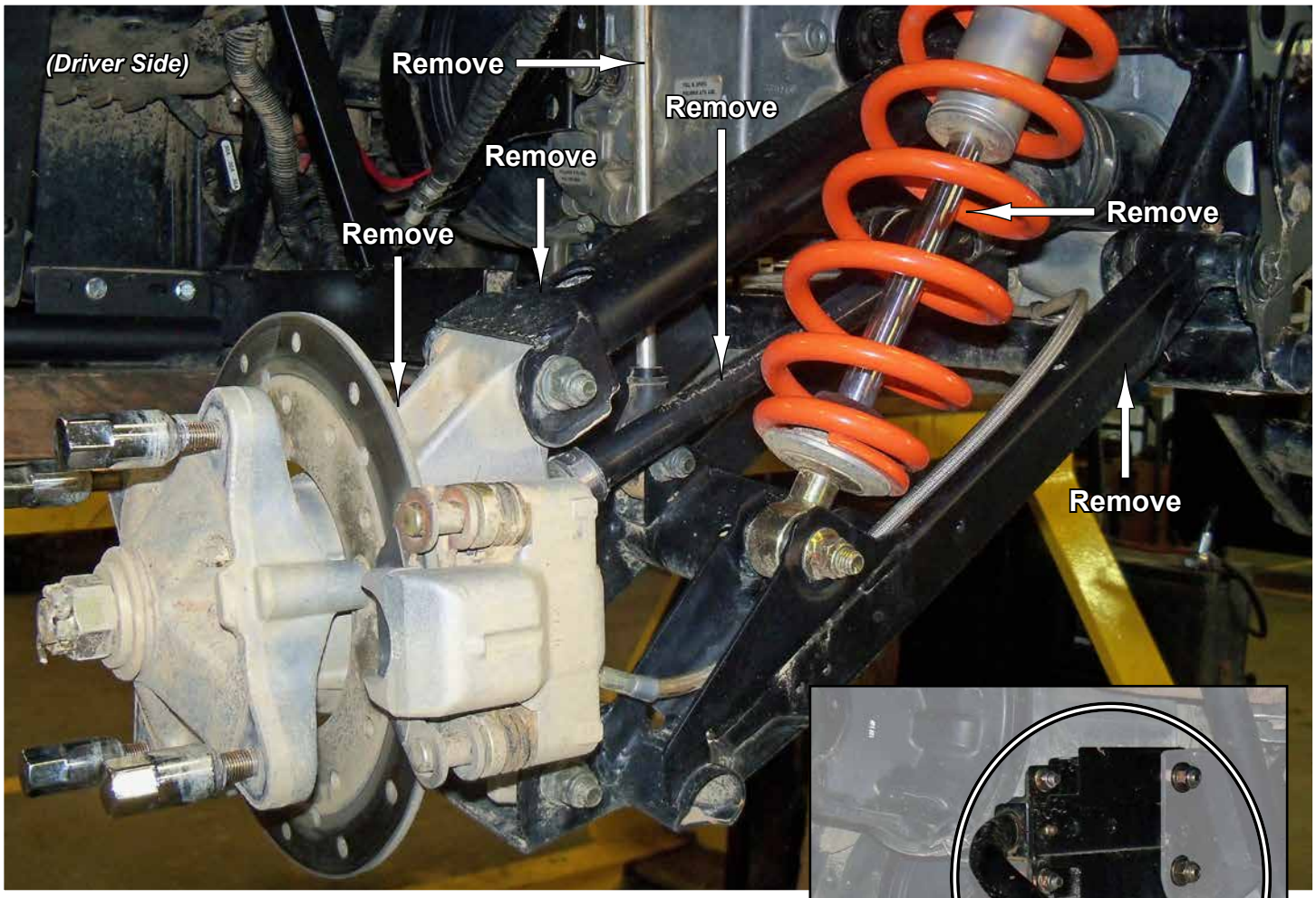

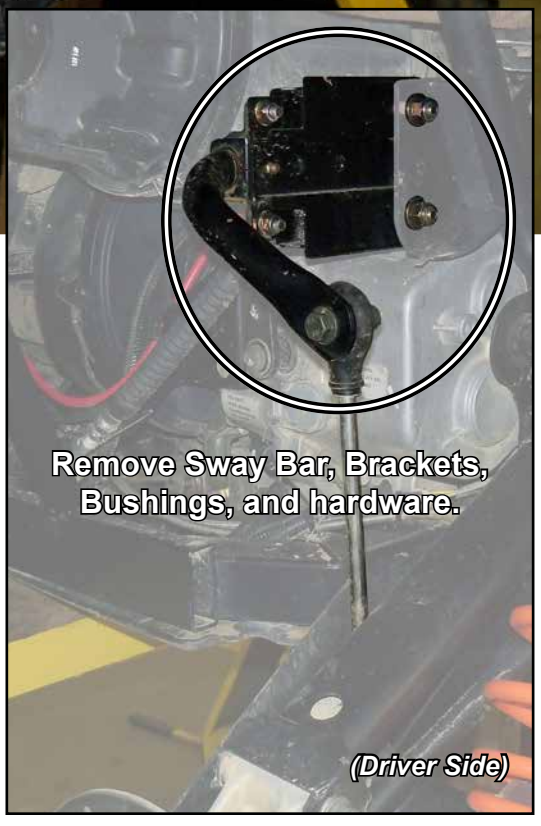

Rear A-Arms prep:

- Install stock Ball Joints, Bushings, and Sleeves, or SuperATV Poly Bushing Kit AAB-P-RZR, into A-Arms (K-N).
- Install Grease Fittings (H) into A-Arms (K-N).

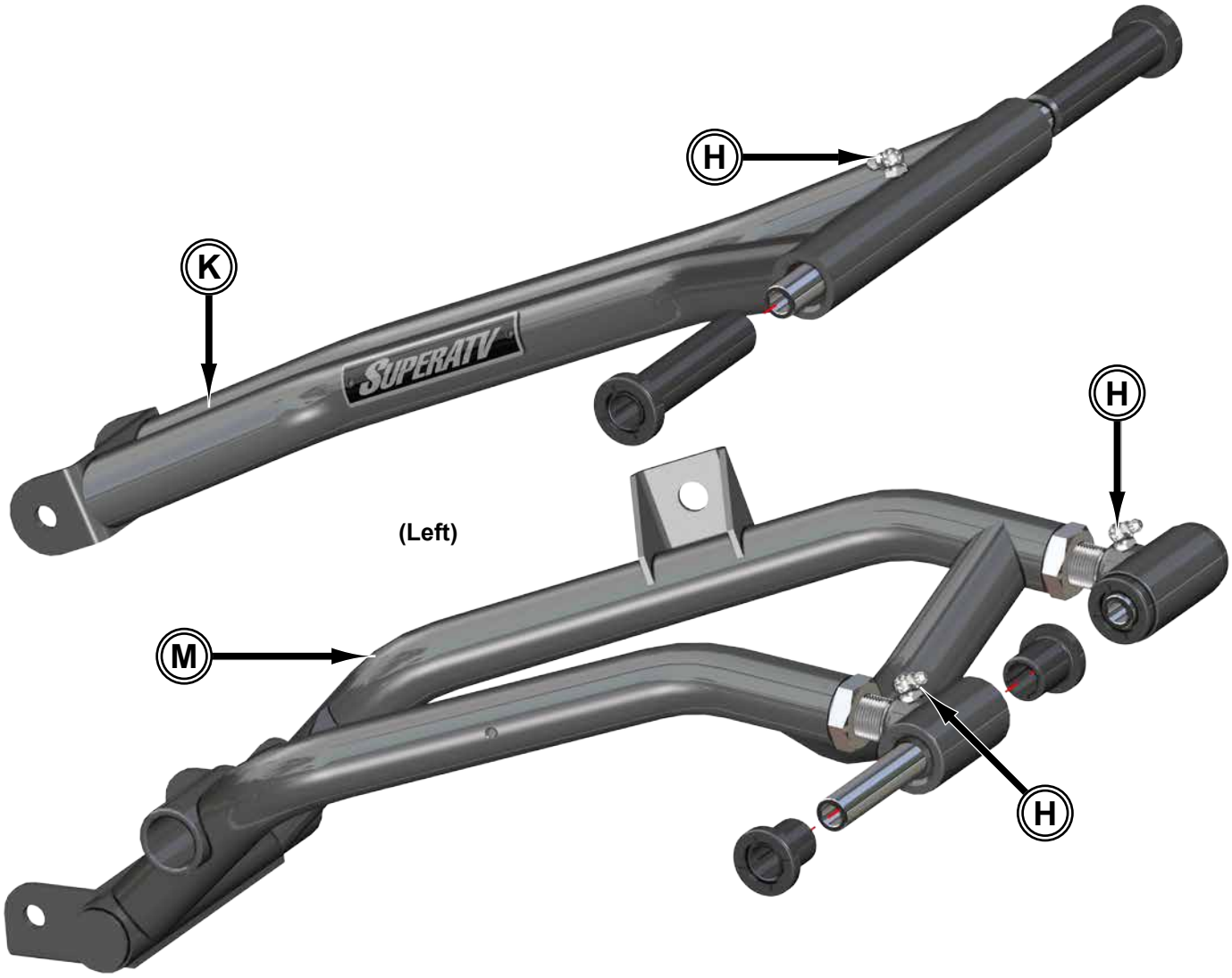

PIVOT BLOCK SETTINGS

- Place new A-Arms onto a flat surface and verify dimension shown.
- *Negative 1° camber setting is achieved when Pivot Blocks are set to this dimension.*
- See last page for additional camber information.

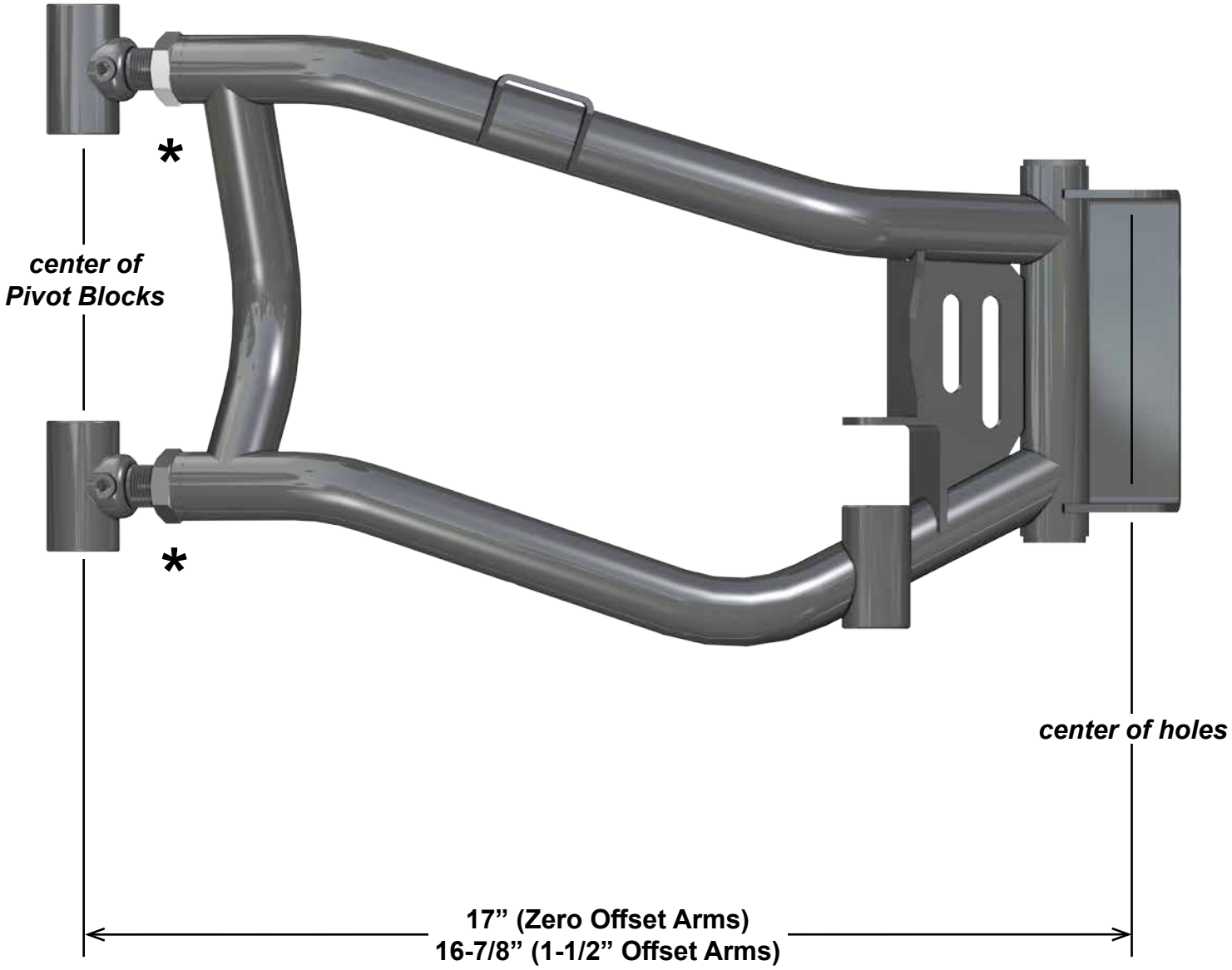

∗**Leave Jam Nuts loose. Tighten after final adjustments have been made.**

Rear installation:

- Install Axles.
- Install Upper A-Arms to machine with stock hardware. SuperATV recommends using Loc-Tite on Nuts when installing.
- Install Lower A-Arms to machine with stock hardware. ***Do not install any Nuts until all final adjustments have been completed.***
- Install provided Sway Bar. See pages 16 - 17.

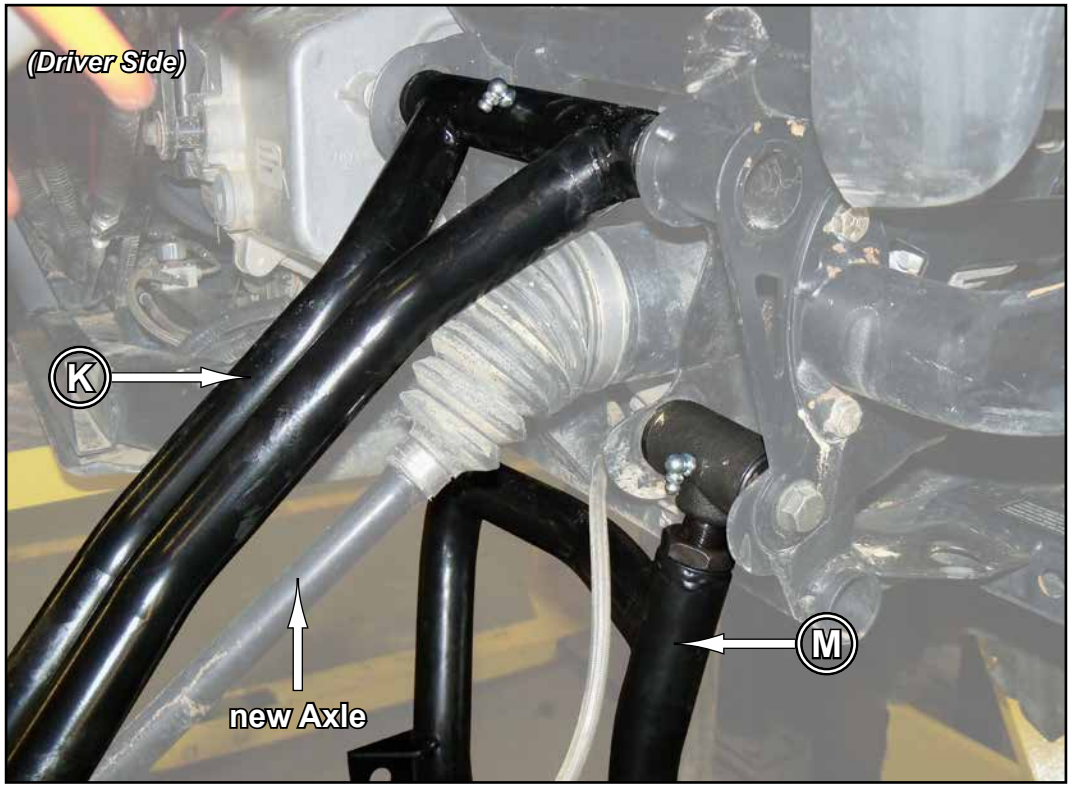

Sway Bar installation: *Do not tighten hardware completely unless noted.*

- Install Grease Fittings into Brackets (C).
- Install Brackets (C) to Frame with hardware shown. Reuse stock Brackets and Bushings.
- Install Sway Bar (D) and Sway Bar Clamps (A) to Brackets (C). Secure with hardware shown. Reuse stock Bushings.

Item	Description
A	Sway Bar Clamp x 2
B	Sway Bar Link x 2
C	Bracket x 2
D	Sway Bar

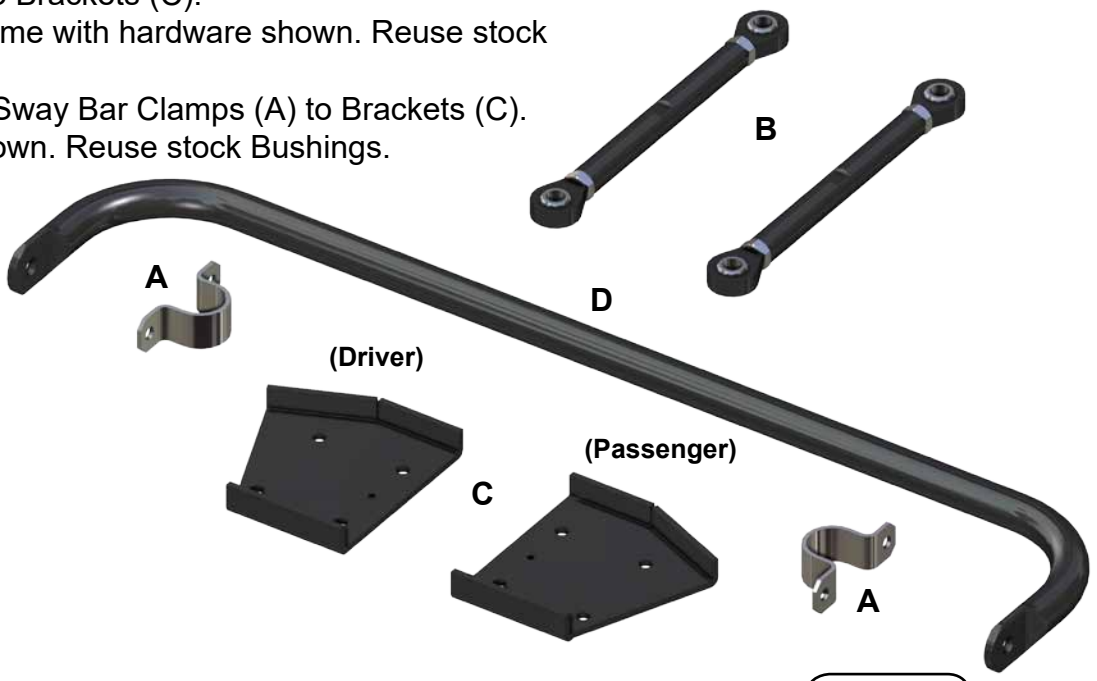

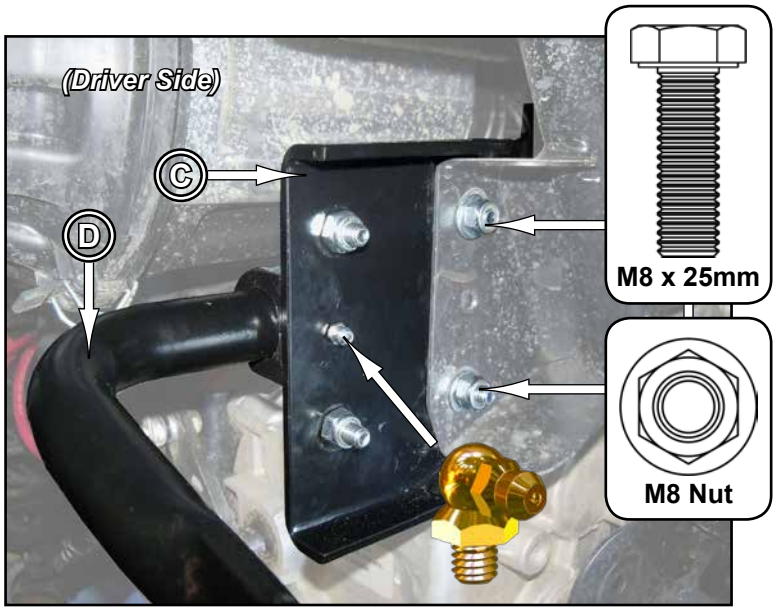

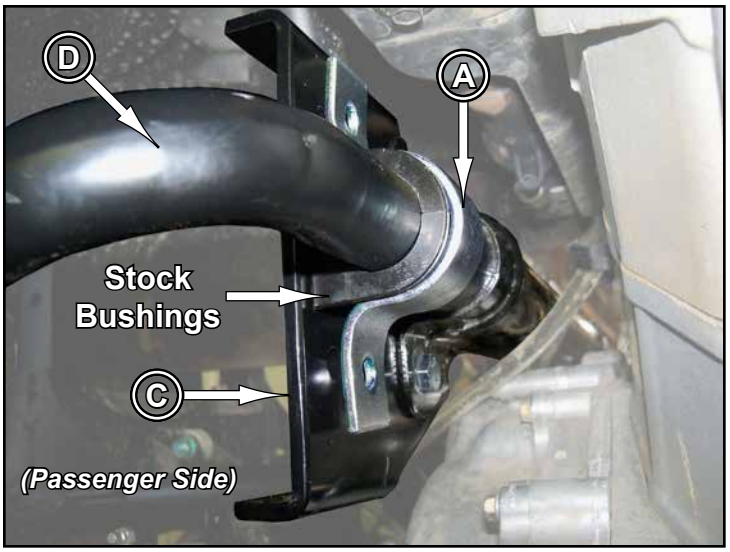

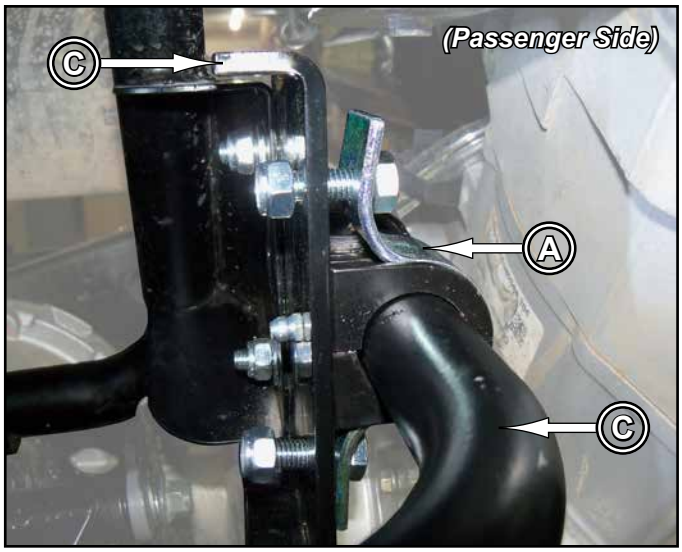

Sway Bar Installation continued: *Do not tighten hardware completely unless noted.*

- Install Sway Bar Links to Sway Bar and Lower A-Arms with hardware shown. ***Do not install any Nuts until all final adjustments have been completed.***
- Ø18mmOD x Ø13mmID x 9.5 mm THK Spacer installs between A-Arm and Sway Bar Link.



- Reinstall Hubs with stock hardware. ***Do not install any Nuts until all final adjustments have been completed.***
- Reinstall Tires and check Camber settings; see last page.
- Add Nuts to previously installed hardware and tighten completely. SuperATV recommends using Loc-Tite on Nuts.



If kit includes Shock Brackets, continue to "Brackets Installation", pages 17 - 19.

- Install Passenger side Brake Line to Driver side. Install Brake Line, Rear (F) to Passenger side.
- Ensure no binding can occur and secure Brake Lines with hardware shown.

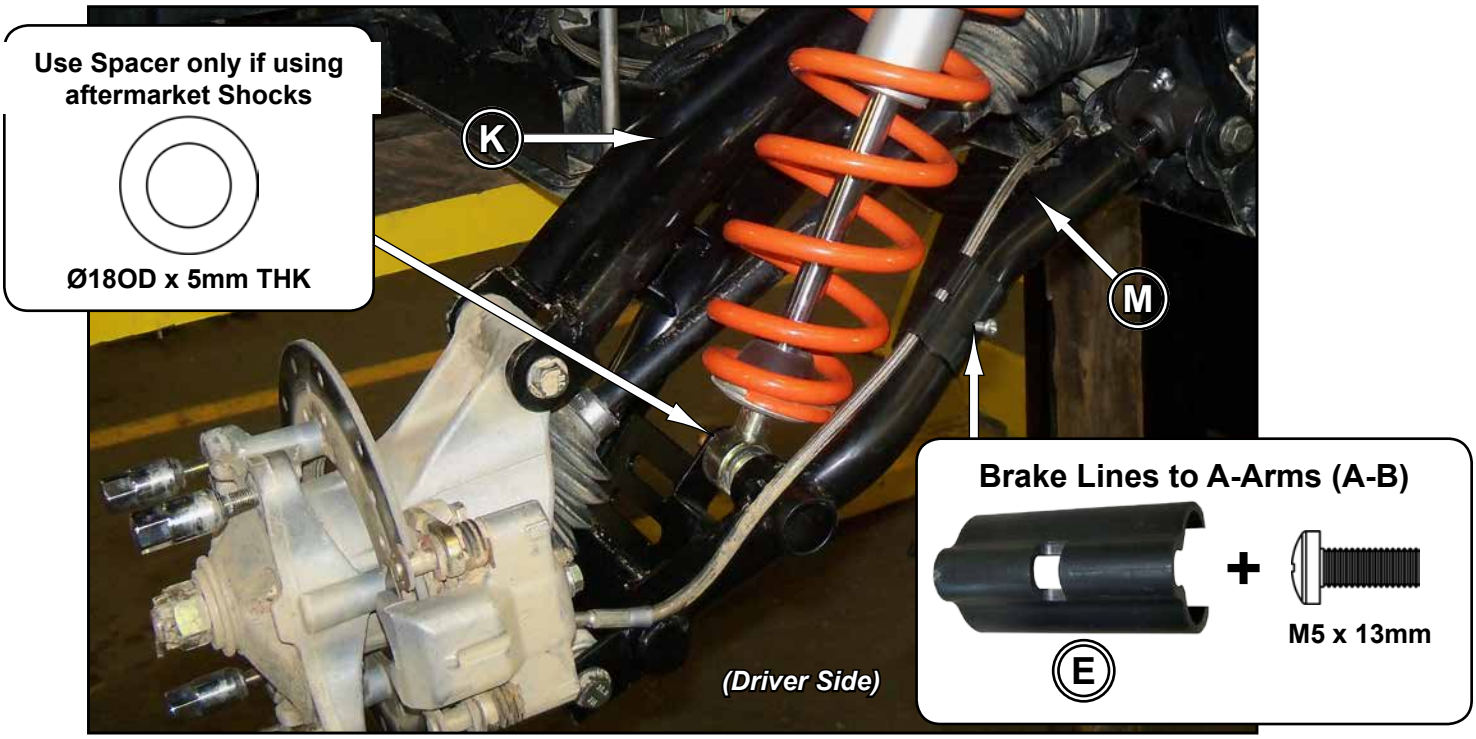

Long Travel Kit Brackets

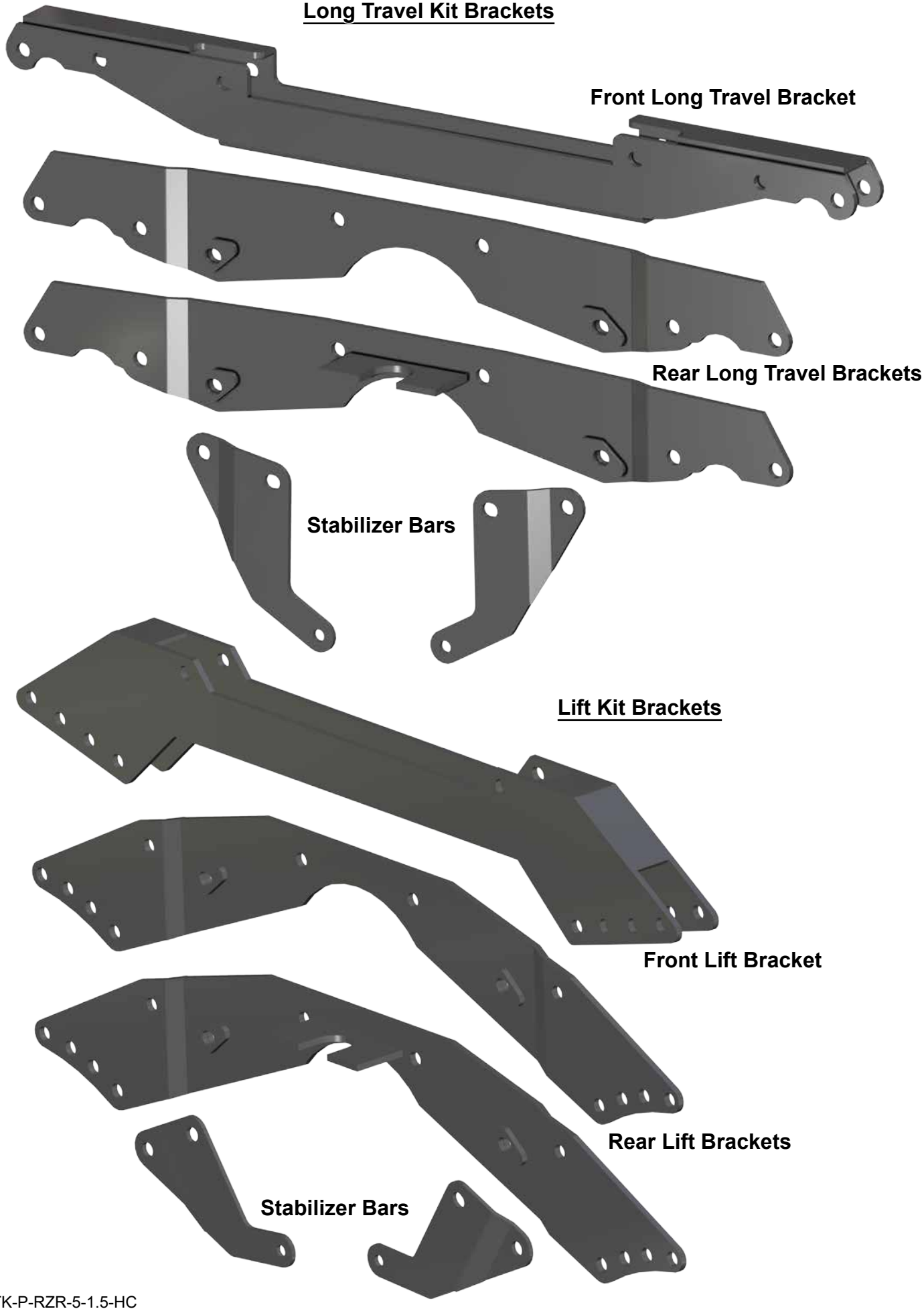

Install appropriate Front Brackets. Lift Kit installation shown.

Front Bracket installation: *Do not tighten hardware completely unless noted.*

- Install Front Bracket to Frame with hardware shown.
- Spacers, Short install between Front Bracket.
- Determine lift and install Shocks to Front Bracket with stock hardware.
- Tighten all hardware completely.

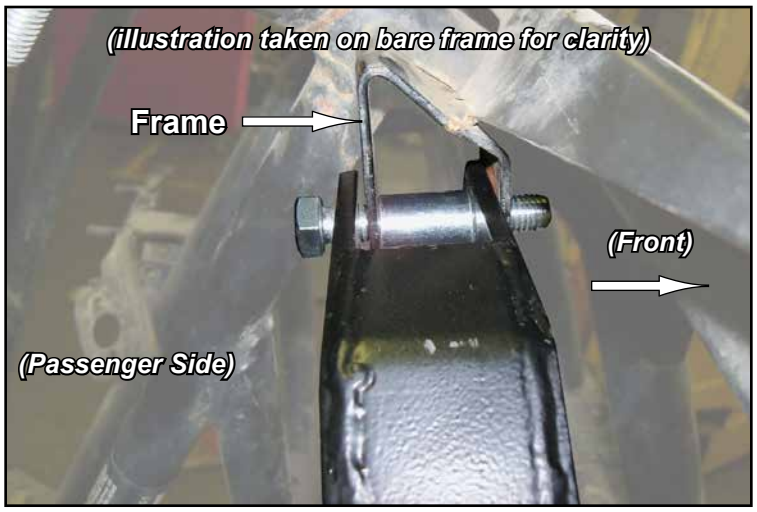

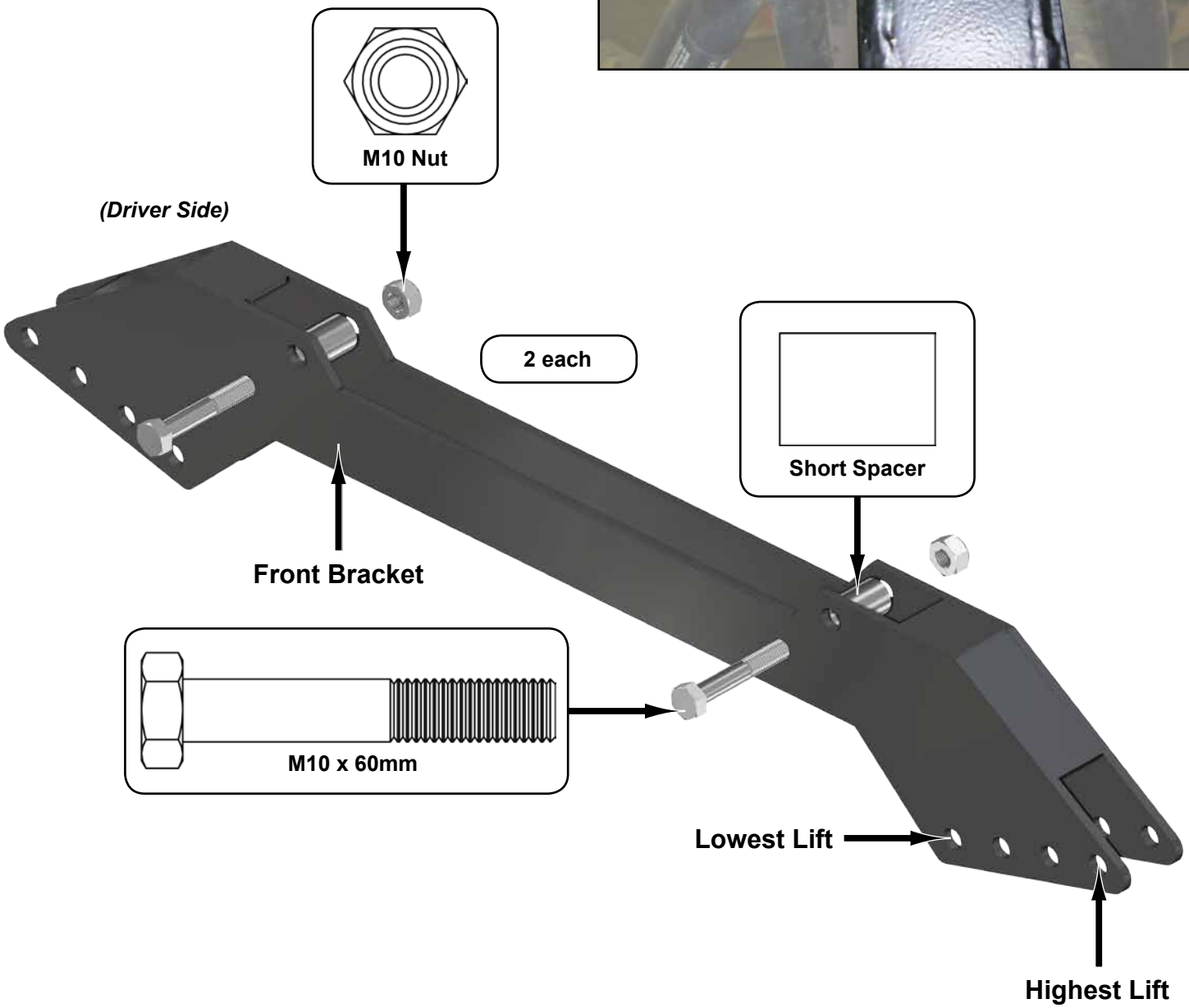

Install appropriate Rear Brackets.

Rear Bracket installation: *Do not tighten hardware completely unless noted.*

- Install Rear Brackets (Fore and Aft) to Frame with hardware shown; ***do not add Nuts to Bolts***.
- Spacers, Long install between Rear Brackets.
- Remove stock Bolts from stock Bracing.
- Install Stabilizer Bars onto Bolts and Rear Bracket Aft. Secure with hardware shown.
- Reinstall Shocks to Rear Brackets with stock hardware.
- Tighten all hardware completely.

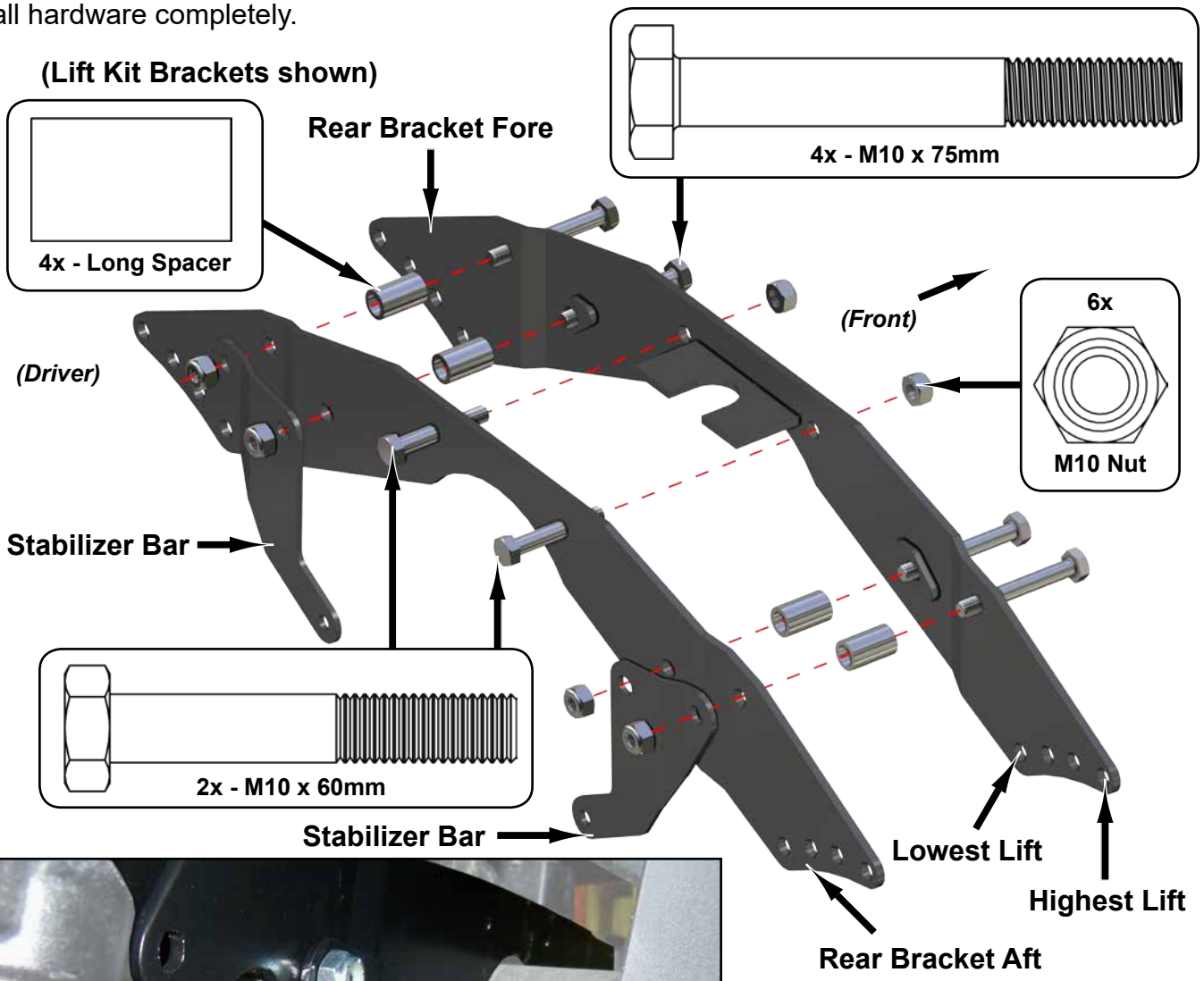

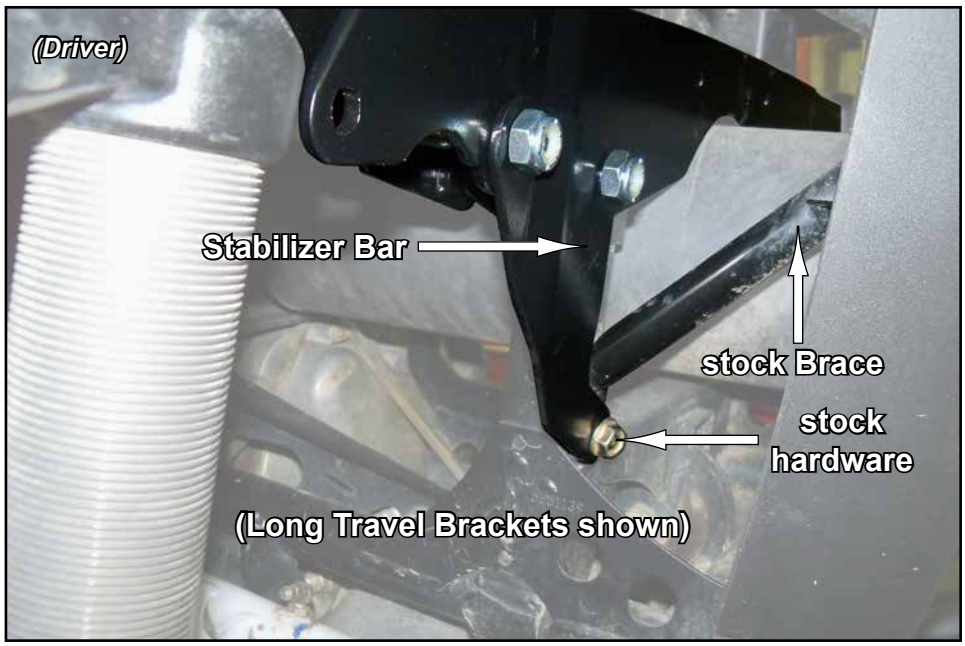

CAMBER

- **Tires must have equal air pressure before making adjustments.**
- **Adjustments to be made after all suspension components have been completely assembled.**
- **Tires must not be in contact with ground when making adjustments.**
- **Perform adjustments in small increments.**





Adjusting Camber:

- Remove A-Arms from Frame and turn Pivot Blocks to adjust camber. Reinstall Arms.
- Lower machine and settle suspension components by rolling machine back and forth several feet at a time.
- Check settings and make small adjustments as needed.
- Each time an adjustment is made, machine must be rolled back and forth to settle suspension components.
- Once desired setting is achieved, tighten hardware completely. Loc-tite on Nuts is recommended.

A NEGATIVE CAMBER SETTING OF 1° to 2° IS RECOMMENDED.

LOWER:
Too much positive camber: adjust Pivot Blocks *OUT*.
Too much negative camber: adjust Pivot Blocks *IN*.
note: 2 full turns is 1°

UPPER A-ARMS:
Too much positive camber: adjust Pivot Blocks *IN*.
Too much negative camber: adjust Pivot Blocks *OUT*.
note: 2 full turns is 1°

Adjust, in or out, to achieve correct setting



2753 Michigan Road • Madison, Indiana 47250 • 855-743-3427

INSTALLATION INSTRUCTIONS

Phantom Fully Adjustable Shocks

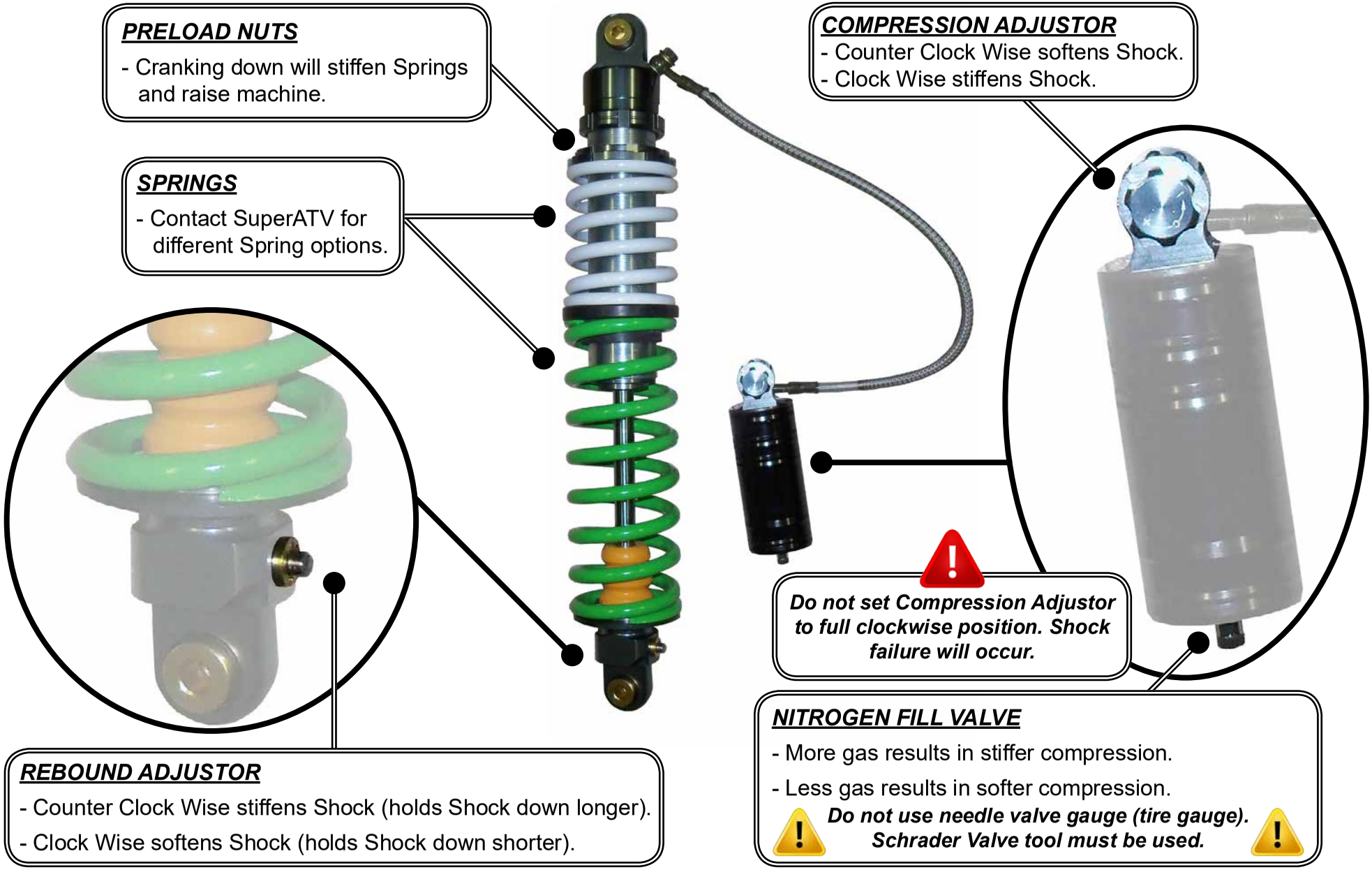

PRELOAD NUTS

- Cranking down will stiffen Springs and raise machine.

SPRINGS

- Contact SuperATV for different Spring options.

COMPRESSION ADJUSTOR

- Counter Clock Wise softens Shock.
- Clock Wise stiffens Shock.

Do not set Compression Adjustor to full clockwise position. Shock failure will occur.

REBOUND ADJUSTOR

- Counter Clock Wise stiffens Shock (holds Shock down longer).
- Clock Wise softens Shock (holds Shock down shorter).

NITROGEN FILL VALVE

- More gas results in stiffer compression.
- Less gas results in softer compression.

Do not use needle valve gauge (tire gauge). Schrader Valve tool must be used.

Read instructions and view illustrations before beginning.

© 2011 SuperATV.com® All Rights Reserved.

Hose and Reservoir *MUST* be mounted away from Muffler





Spanner Wrench
(NOT INCLUDED)

When adjusting Pre-load Nuts, use Spanner Wrench

Need help with your installation?

sales@superatv.com

www.superatv.com

1-855-743-3427

8:00am - 8:00pm EST M-Th
8:00am - 7:00pm EST Friday
9:00am - 2:00pm EST Saturday

MAINTENANCE

- Inspect Shocks before riding.
- Rinse mud and debris away after riding. ***DO NOT USE A HIGH PRESSURE WASHER***. Standard garden hose is suitable.

SERVICE

- Shock servicing and rebuilding requires special tools and knowledge. SuperATV recommends using a trained professional or service center. Depending on usage, SuperATV recommends servicing every year for racing applications, and every (2) years under normal riding applications.
- Use synthetic medium #10 shock oil.

WARRANTY

- Shocks include a (6) month free of manufacturing defects warranty.

Thank You For Choosing SUPERATV.COM®

Liability Statement

SuperATV's® products are designed to best fit user's ATV/UTV under stock conditions. Adding, modifying, or fabricating any factory or aftermarket parts will void any warranty provided by SuperATV® and is not recommended. SuperATV's® products could interfere with other aftermarket accessories. If user has aftermarket products on machine, contact SuperATV® to verify that they will work together.

Although SuperATV® has thousands of satisfied customers, user should be aware that installing lift kits, long travel, or suspension kits, tires, etc. will change the ride of machine and may increase maintenance and part wear. Operating any off-road machine while, or after, consuming alcohol and/or drugs increases risk of bodily harm or death. No warranty or representation is made as to this product's ability to protect user from severe injury or death. SuperATV® urges operators and occupants to wear a helmet and appropriate riding gear at all times.

By purchasing and installing SuperATV® products, user agrees that should damages occur, SuperATV® will not be held responsible for loss of time, use, labor fees, replacement parts, or freight charges. SuperATV®, nor any 3rd party, will not be held responsible for any direct, indirect, incidental, special, or consequential damages that result from any product purchased from SuperATV®. The total liability of seller to user for all damages, losses, and causes of action, if any, shall not exceed the total purchase price paid for the product that gave rise to the claim.

SuperATV® will warranty only parts provided by SuperATV®. Any damage or problems with OEM housings, bearings, seals, or other manufacturers' products will not be covered by SuperATV®. SuperATV® parts and products are not warrantied if item was not installed properly, misused, or modified.

Installing, adding, modifying, or fabricating any factory or aftermarket product to your ATV/UTV may violate certain local, state, and federal laws. Be advised that laws vary depending on town, city, county, state, etc. Use of certain products on public streets, roads, or highways may be in violation law. The Buyer is solely and exclusively legally and personally responsible for any violation of the law by the installation or use of the product. You must abide by all local, state, and federal laws, including but not limited to vehicle safety, traffic laws, and ordinances. It is your responsibility to know the laws and how they apply to you.

The Buyer is responsible to fully understand the capability and limitations of his/her vehicle according to manufacturer specifications, warnings and instructions and agrees to hold SuperATV® harmless from any damage resulting from failure to adhere to such specifications, warnings and/ or instructions. The Buyer is also responsible to obey all applicable federal, state, and local laws and ordinances when operating his/her vehicle while using this product, and the Buyer agrees to hold SuperATV® harmless from any violation thereof.