2753 Michigan Road • Madison, Indiana 47250 • 855-743-3427

INSTALLATION INSTRUCTIONS

Adjustable Lift Kit

Polaris RZR® 900 - General™

A Press or Ball Joint tool is required to remove and install Ball Joints.

Item	Description
A	Upper A-Arm, Passenger
B	Lower A-Arm, Passenger
C	Upper A-Arm, Driver
D	Lower A-Arm, Driver
J	Front Lift Bracket



(Passenger)

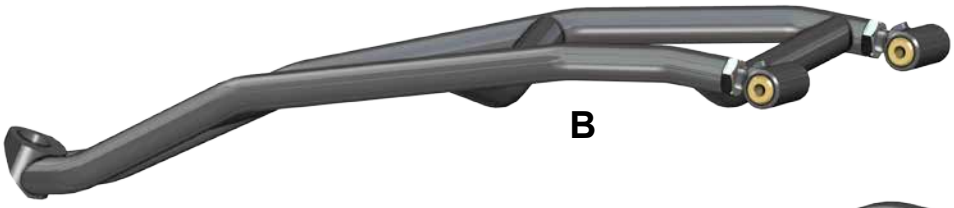

Front A-Arms





(Driver)



(Kit contents continue on following pages)

- FRONT Stock Sway Bar cannot be used.

Need help with your installation?

sales@superatv.com

www.superatv.com

1-855-743-3427

8:00am - 8:00pm EST M-Th
8:00am - 7:00pm EST Friday
9:00am - 2:00pm EST Saturday

Read instructions and view illustrations before beginning.

Thank You For Choosing

© 2018 SuperATV.com®. All Rights Reserved.

(Kit contents continued)

Item	Description
E	Upper A-Arm, Passenger
F	Lower A-Arm, Passenger
G	Upper A-Arm, Driver
H	Lower A-Arm, Driver

Rear A-Arms

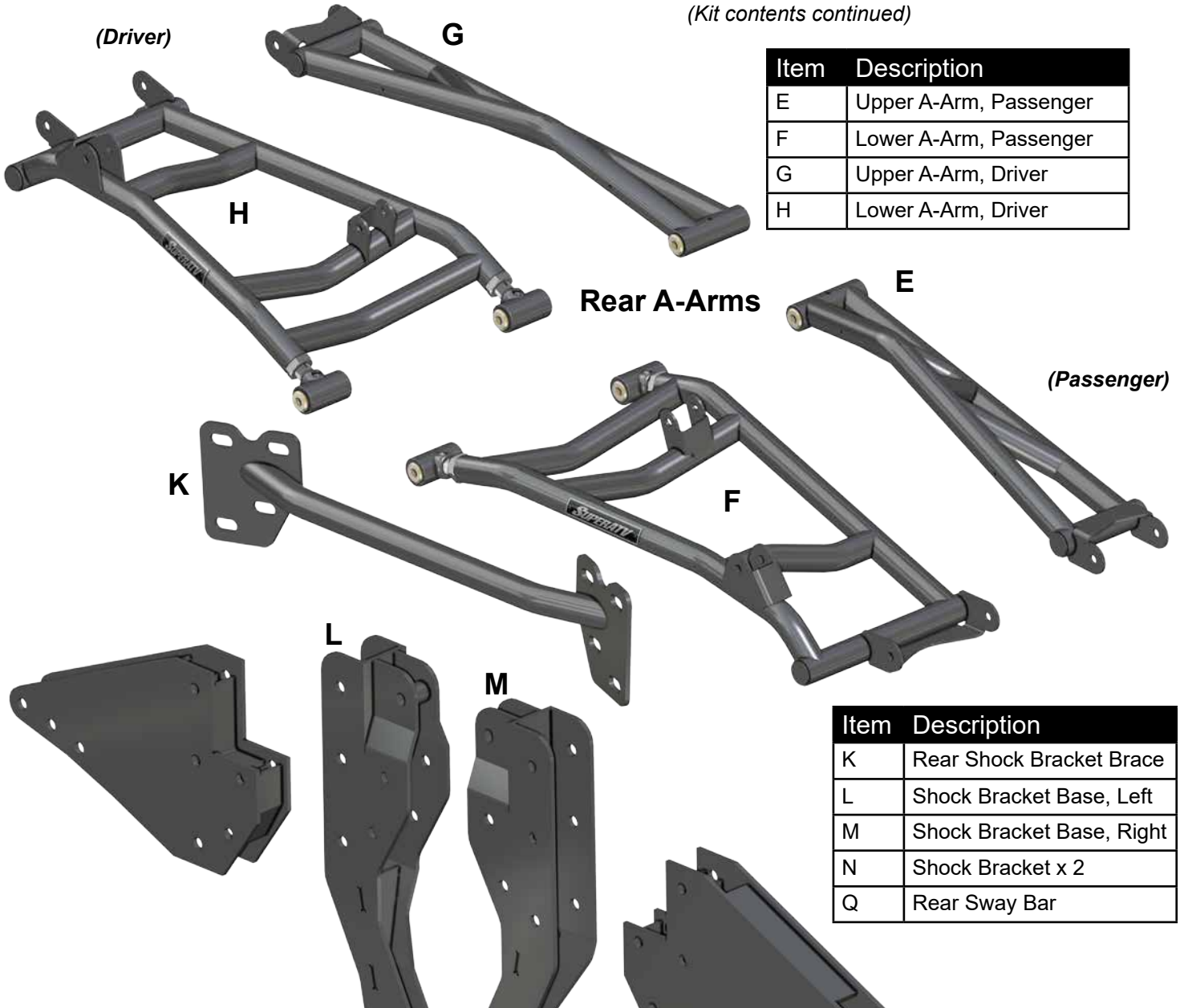

Item	Description
K	Rear Shock Bracket Brace
L	Shock Bracket Base, Left
M	Shock Bracket Base, Right
N	Shock Bracket x 2
Q	Rear Sway Bar



- USE ON 900 MODELS ONLY
- NOT INCLUDED OR USED ON RZRS 900 MODELS

(Kit contents continued)



10x - Brake Line Clamps



2x - Pivot Bushing Spacer

8x - Straight Fitting



4x - 90° Fitting

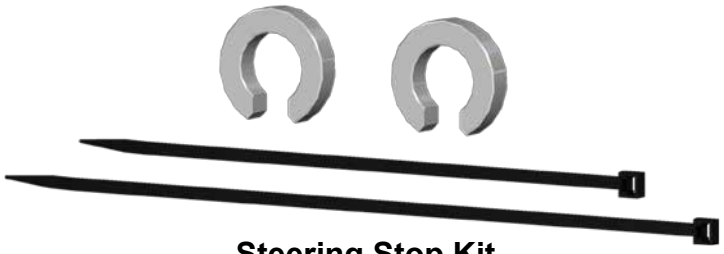

Steering Stop Kit

Brake Lines (P)

Location	Length (Approx)
Right Front	56”
Left Front	42”
Right Rear	60”
Left Rear	48”





Front Brake Lines have same style fittings at each end.

Liability Statement

SuperATV’s® products are designed to best fit user’s ATV/UTV under stock conditions. Adding, modifying, or fabricating any factory or aftermarket parts will void any warranty provided by SuperATV® and is not recommended. SuperATV’s® products could interfere with other aftermarket accessories. If user has aftermarket products on machine, contact SuperATV® to verify that they will work together.

Although SuperATV® has thousands of satisfied customers, user should be aware that installing lift kits, long travel, or suspension kits, tires, etc. will change the ride of machine and may increase maintenance and part wear. Operating any off-road machine while, or after, consuming alcohol and/or drugs increases risk of bodily harm or death. No warranty or representation is made as to this product’s ability to protect user from severe injury or death. SuperATV® urges operators and occupants to wear a helmet and appropriate riding gear at all times.

By purchasing and installing SuperATV® products, user agrees that should damages occur, SuperATV® will not be held responsible for loss of time, use, labor fees, replacement parts, or freight charges. SuperATV®, nor any 3rd party, will not be held responsible for any direct, indirect, incidental, special, or consequential damages that result from any product purchased from SuperATV®. The total liability of seller to user for all damages, losses, and causes of action, if any, shall not exceed the total purchase price paid for the product that gave rise to the claim.

SuperATV® will warranty only parts provided by SuperATV®. Any damage or problems with OEM housings, bearings, seals, or other manufacturers’ products will not be covered by SuperATV®. SuperATV® parts and products are not warrantied if item was not installed properly, misused, or modified.

Installing, adding, modifying, or fabricating any factory or aftermarket product to your ATV/UTV may violate certain local, state, and federal laws. Be advised that laws vary depending on town, city, county, state, etc. Use of certain products on public streets, roads, or highways may be in violation law. The Buyer is solely and exclusively legally and personally responsible for any violation of the law by the installation or use of the product. You must abide by all local, state, and federal laws, including but not limited to vehicle safety, traffic laws, and ordinances. It is your responsibility to know the laws and how they apply to you.

The Buyer is responsible to fully understand the capability and limitations of his/her vehicle according to manufacturer specifications, warnings and instructions and agrees to hold SuperATV® harmless from any damage resulting from failure to adhere to such specifications, warnings and/ or instructions. The Buyer is also responsible to obey all applicable federal, state, and local laws and ordinances when operating his/her vehicle while using this product, and the Buyer agrees to hold SuperATV® harmless from any violation thereof.

Phantom Pro-Sport Series Shocks Settings:



Front components shown must be removed; *Keep all components removed from machine.*

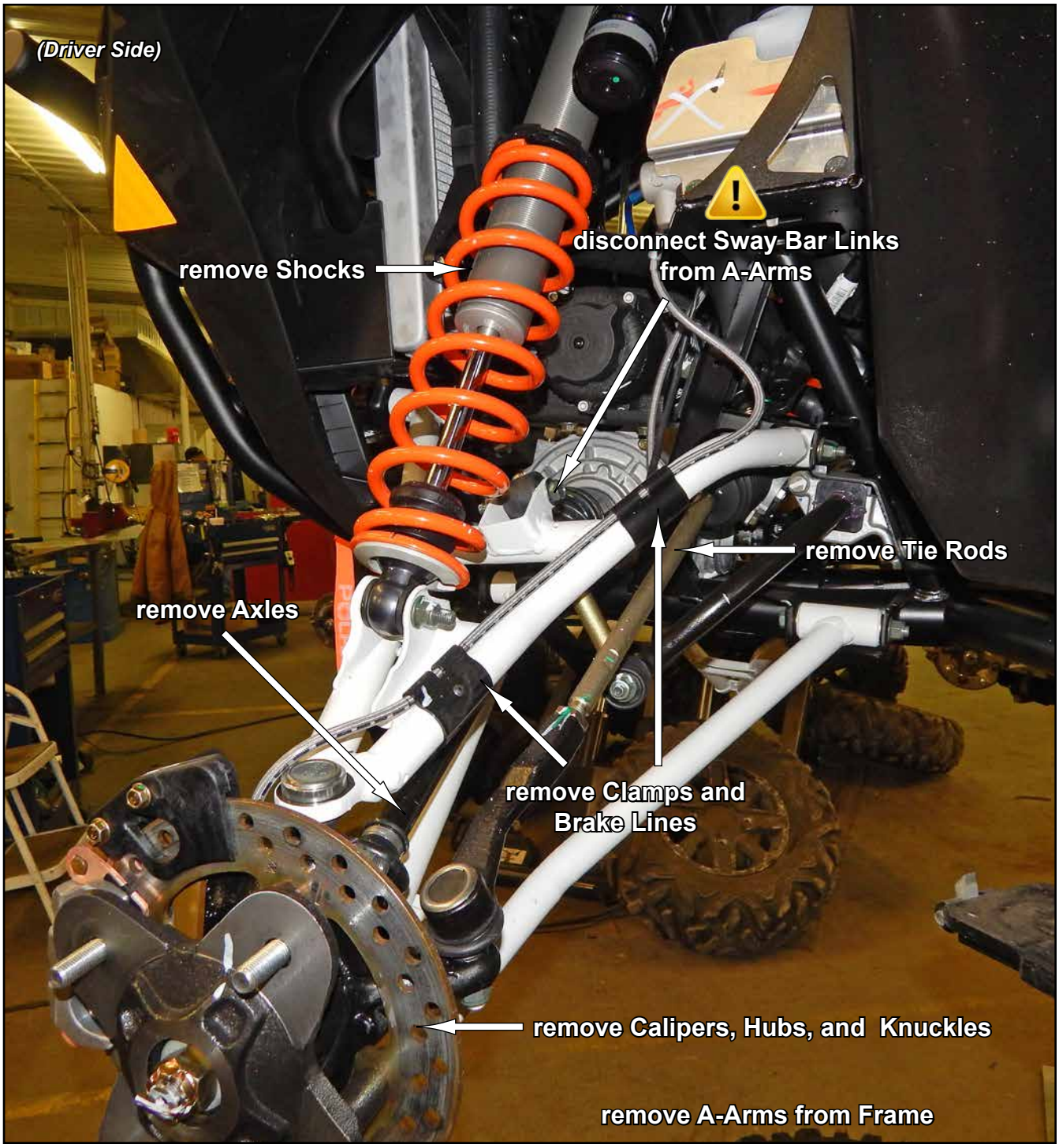

General models only: remove Sway Bar Links and Sway Bar from machine.

Vent Tube Rerouting:

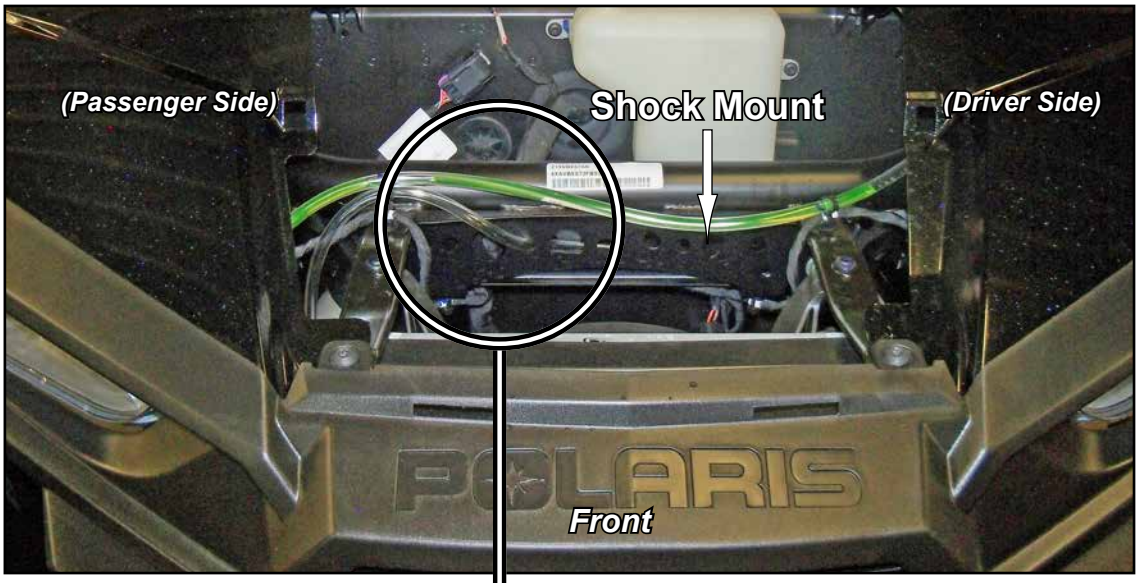

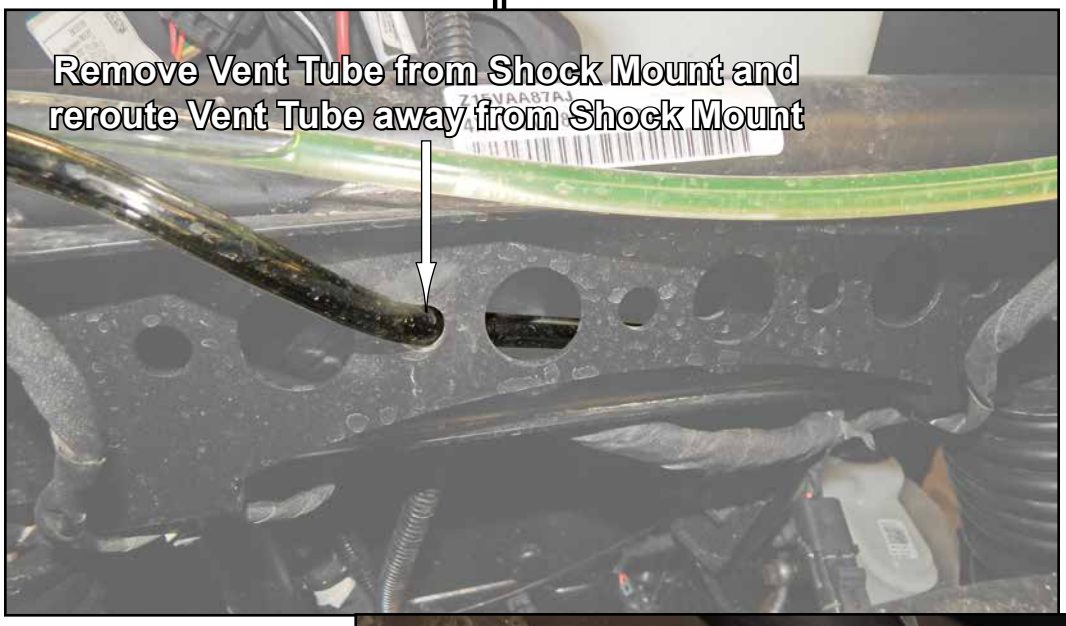

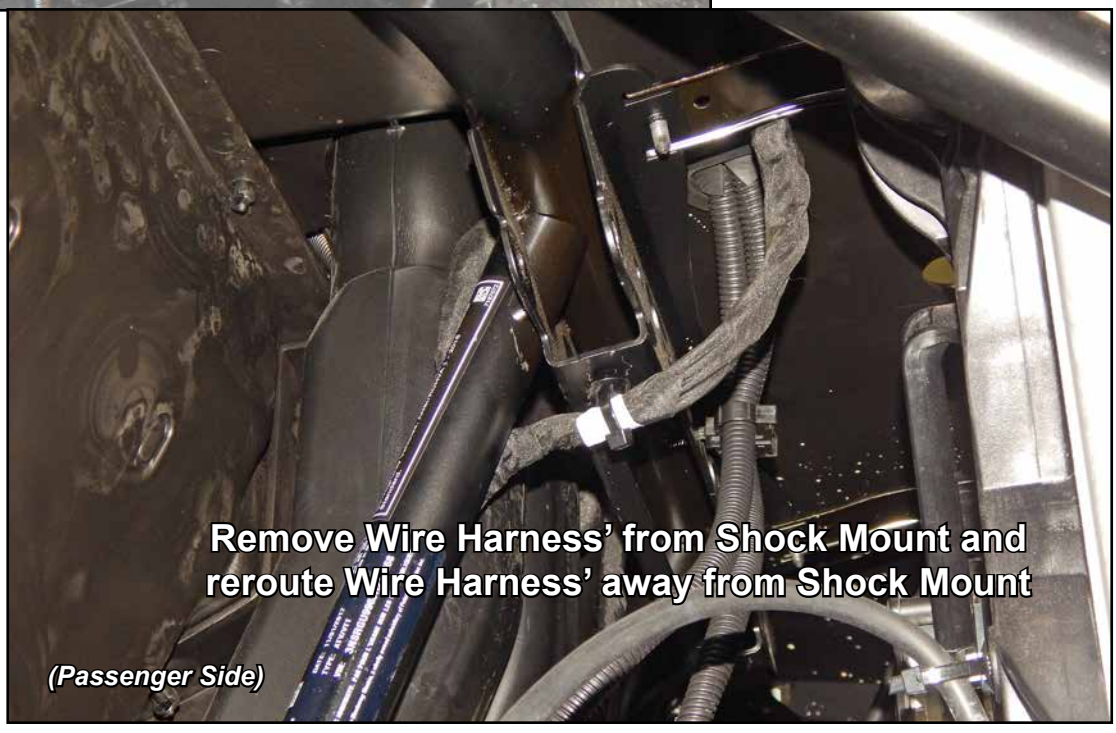

Steering Stop Installation: *Rack and Pinion shown off machine for clarity*

Note: Driver Side installation is shown.

- Unclamp and slide Boot away from Steering Gear Box.
- Install Steering Stop Bushing onto shaft.
- Repeat steps for opposite side.

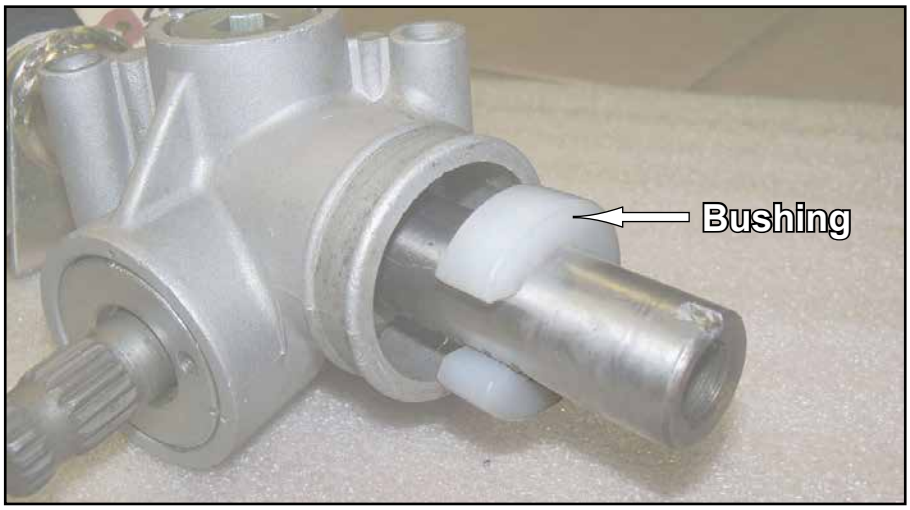

Tie Rods Installation:

- Remove Jam Nuts from Ball and Sockets.
- Install Ball and Sockets to Rack and Pinion. Use Loctite.
- Install Boots to Rack and Pinion and secure with Wire Ties.
- Reinstall Jam Nuts to Ball and Sockets.
- Install Tie Rod Shafts to Ball and Sockets.
- When securing Tie Rod Ends to Spindles, use hardware shown.



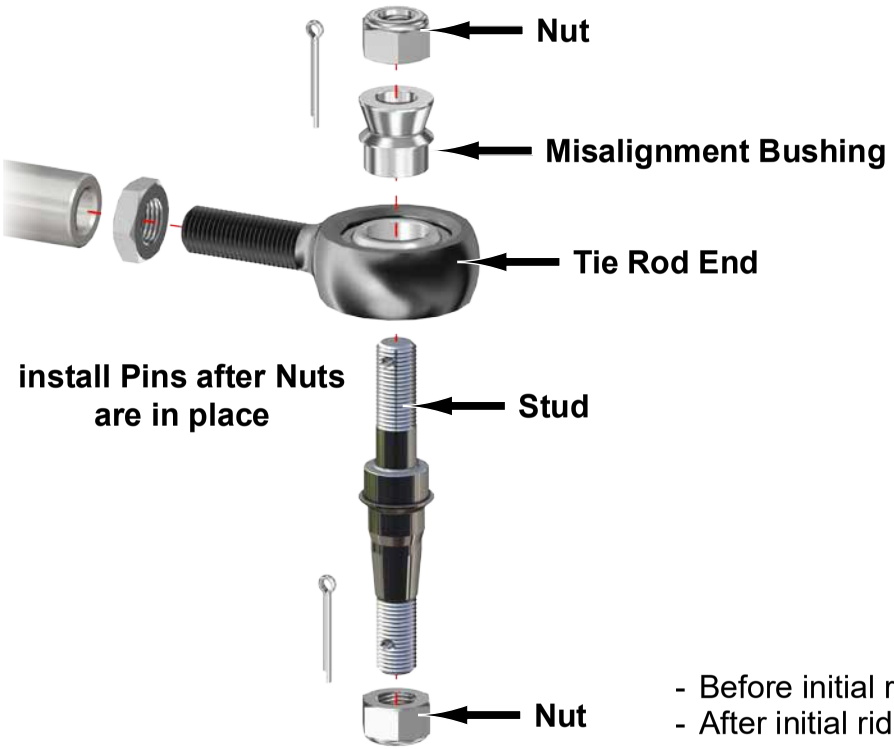

- Before initial ride, set toe-in of vehicle.
- After initial ride check to see that hardware remained tight.

A-Arms Prep:

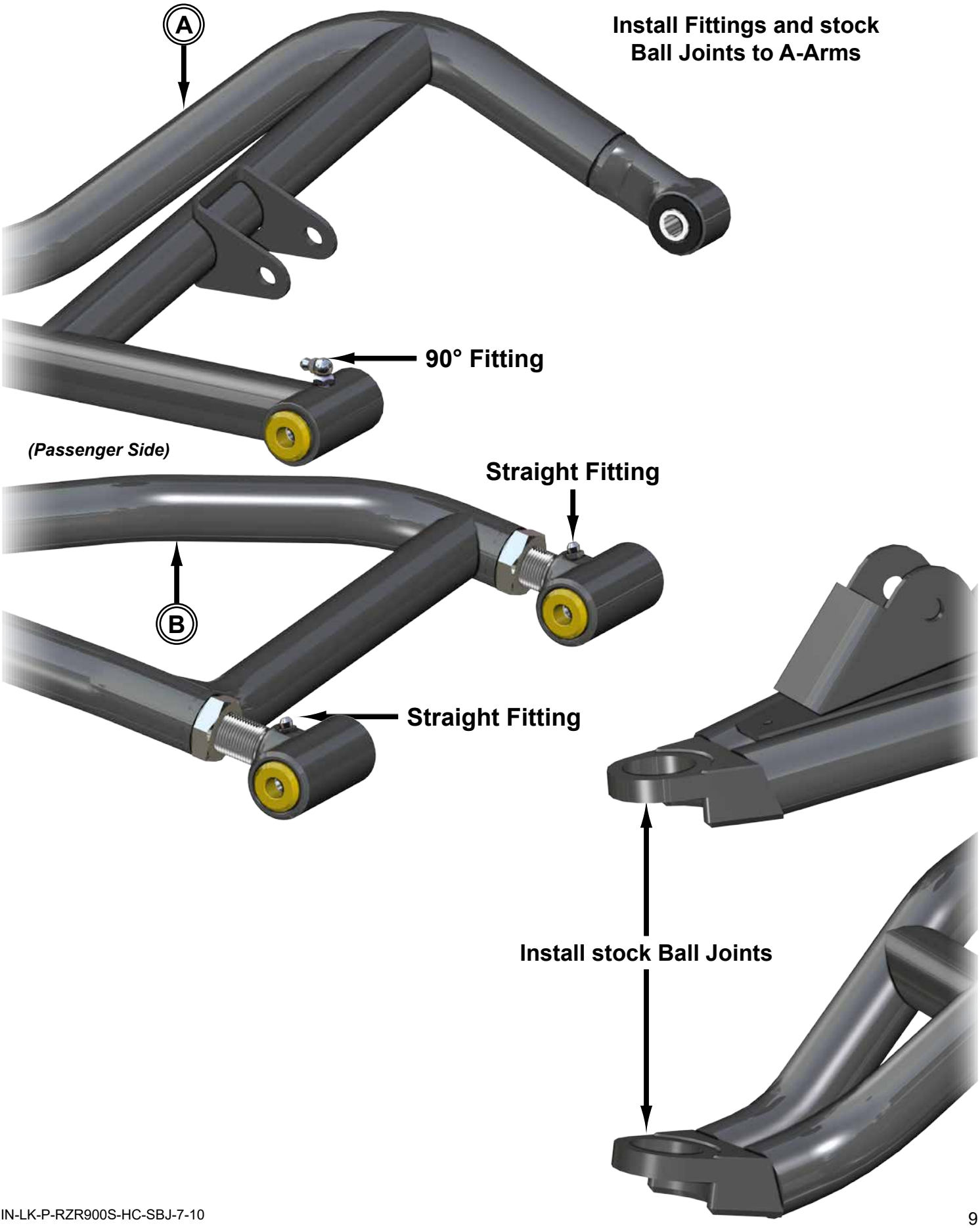
A
Install Fittings and stock Ball Joints to A-Arms
90° Fitting
(Passenger Side)
Straight Fitting
B
Straight Fitting
Install stock Ball Joints

PIVOT BLOCK SETTINGS

- Place new A-Arms onto a flat surface and verify dimension shown.
- *Negative 1° camber setting is achieved when Pivot Blocks are set to this dimension.*
- See last page for additional camber information.

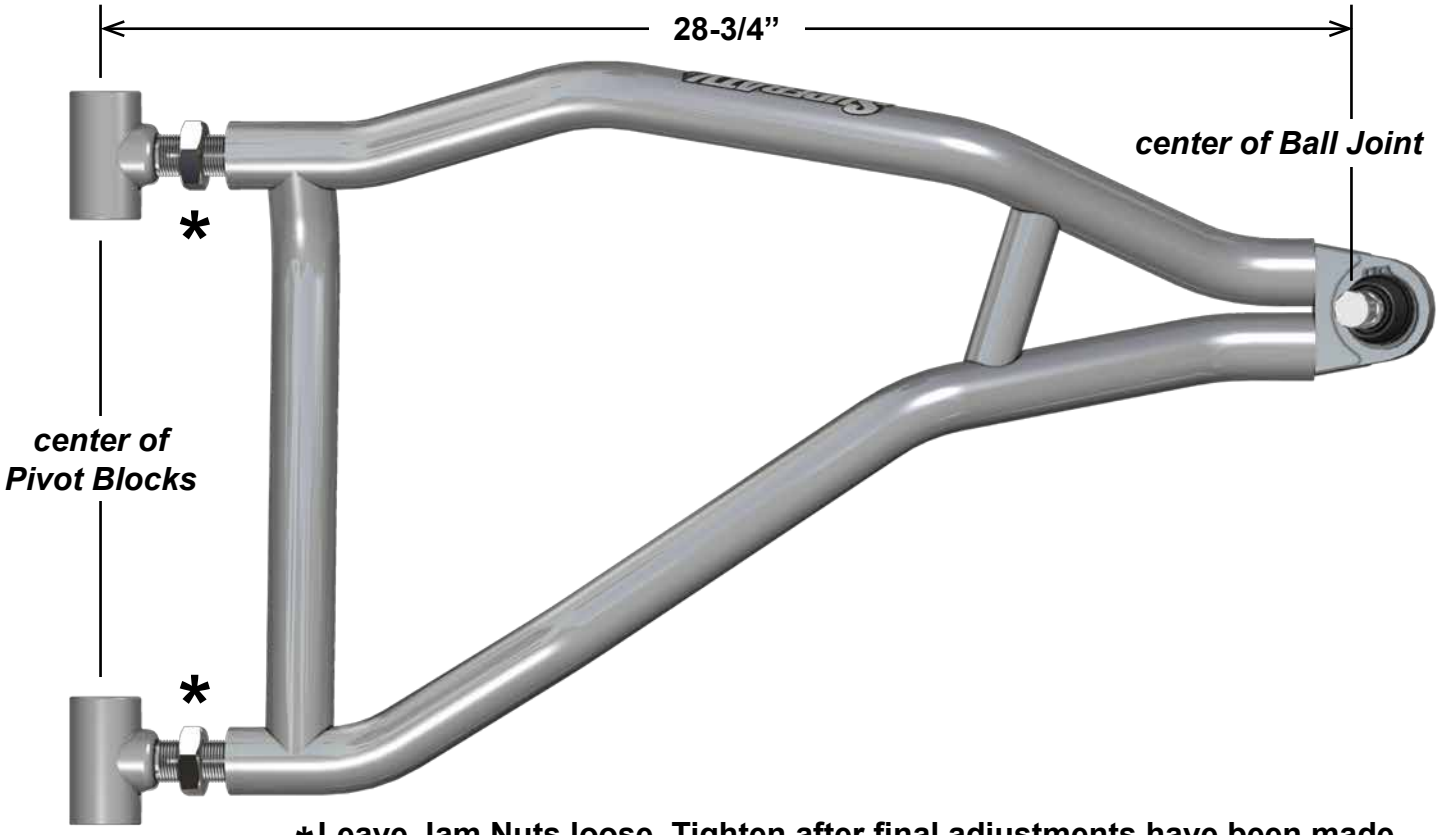

∗Leave Jam Nuts loose. Tighten after final adjustments have been made.

Front Lift Bracket Installation: *Do not tighten hardware completely unless noted.*

- Install Front Lift Bracket (J) to Frame with hardware shown.

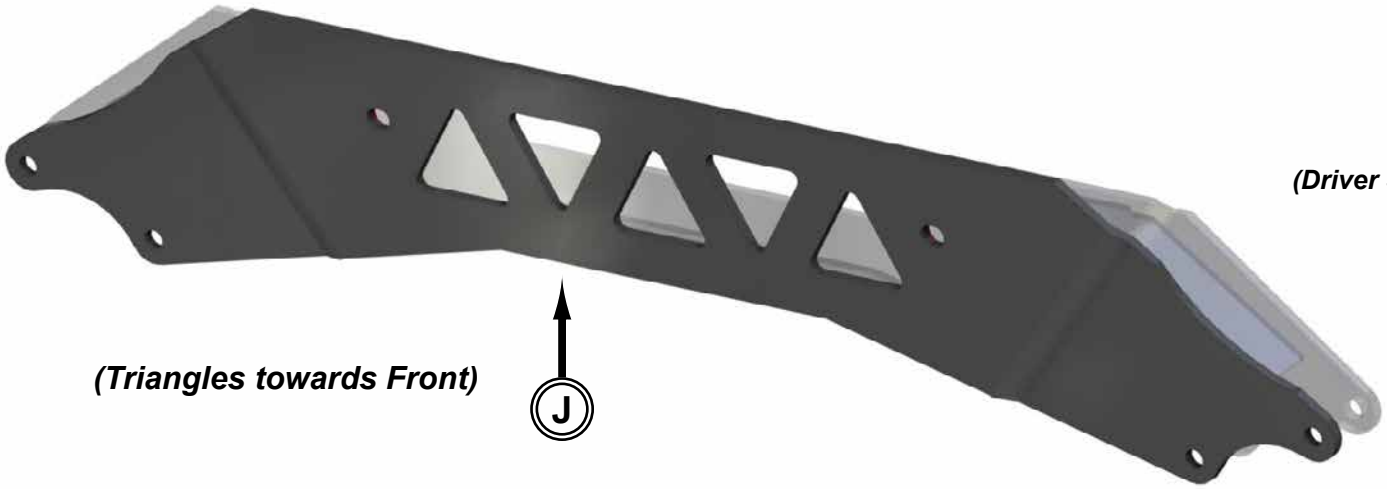

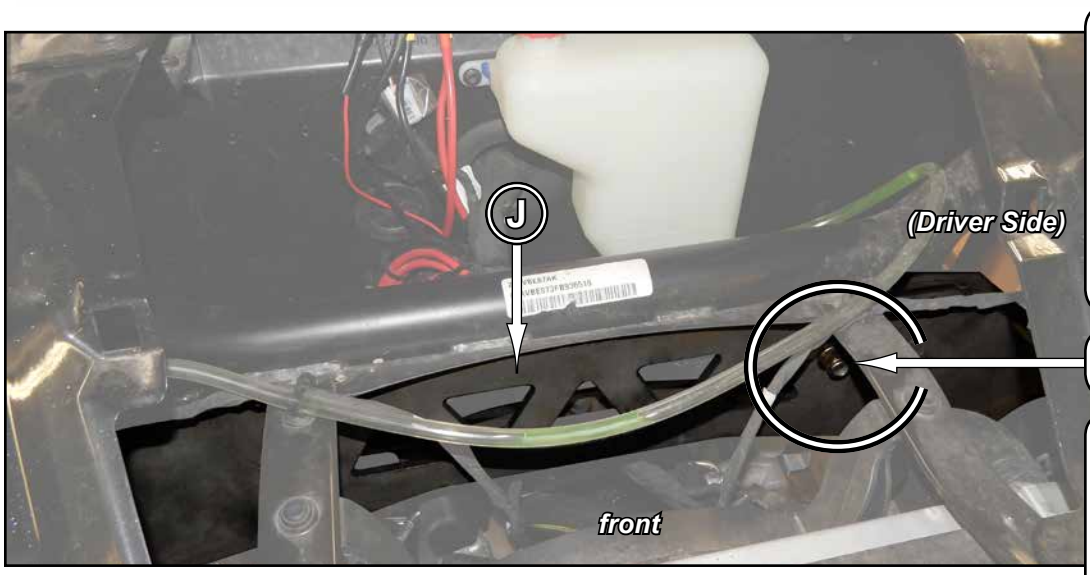

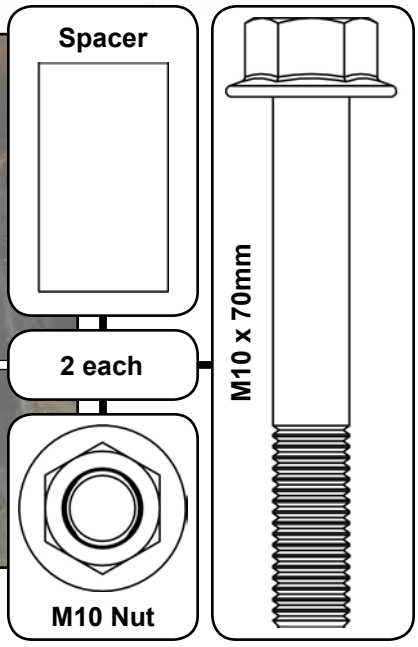

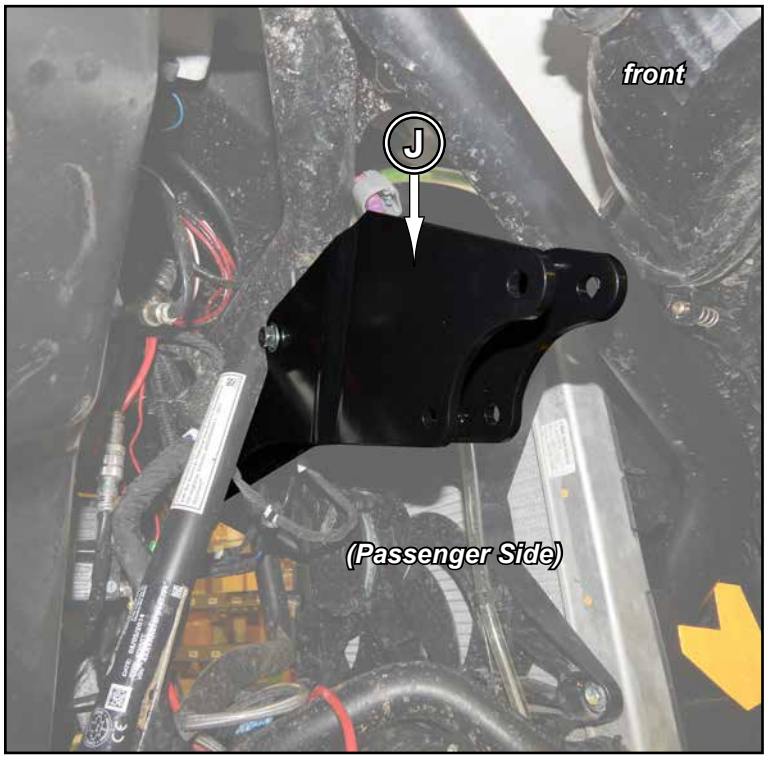

Hint: use needle nose pliers or a telescoping magnet to place Spacers into position.

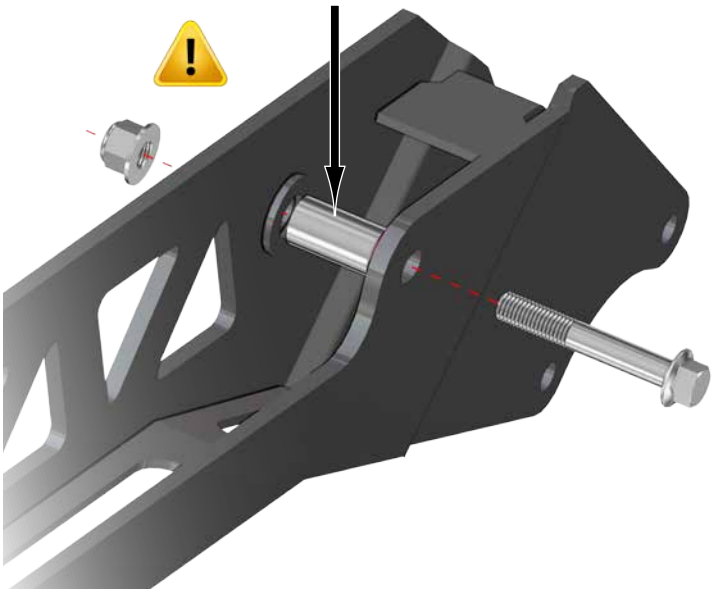

tighten hardware completely

Front Installation: *Do not tighten hardware completely unless noted.*

- Install A-Arms (A-D) to Frame with stock hardware. Tighten Upper A-Arm completely; SuperATV recommends Loc-Tite on Nuts. ***Keep Nuts on Lower Arms loose until all final adjustments have been completed.***
- Secure Sway Bar Links to Arms with stock hardware. ***Keep Nuts on Lower Arms loose until all final adjustments have been completed.***
- Install new Axles.
- Reinstall Hubs and Knuckles; tighten hardware.

Due to manufacturer changes in Frame design, SuperATV Upper A-Arms will fit tightly when installed.

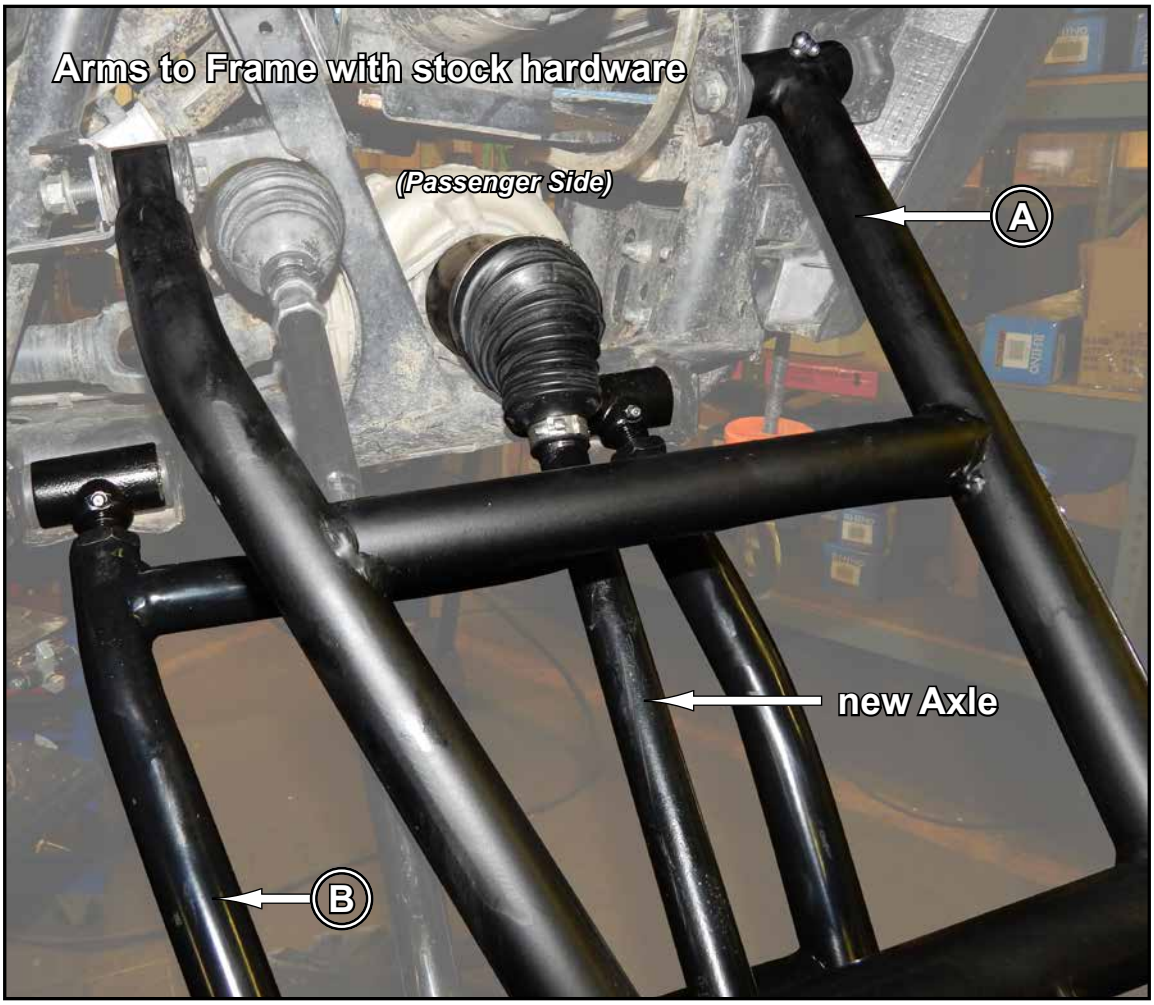

Front Installation: *Do not tighten hardware completely unless noted.*

- Determine desired amount of lift and install Shocks with hardware shown.

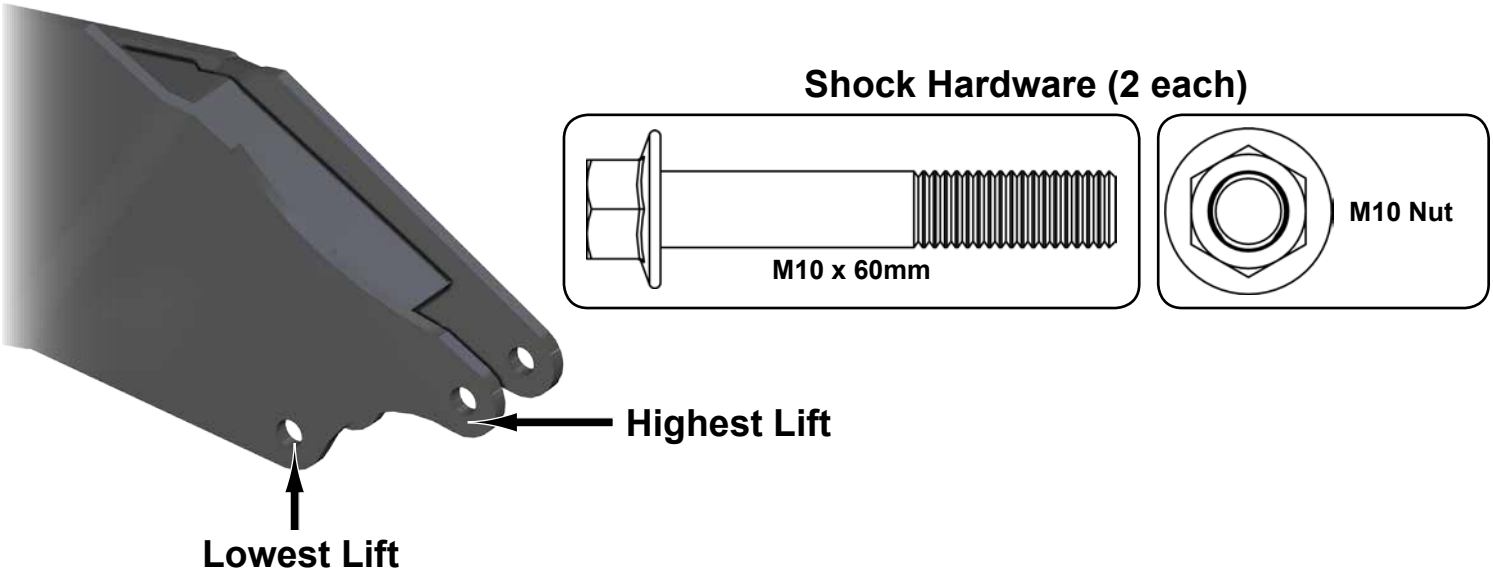

tighten hardware completely

Shock Mounting Notes:

- Secure Reservoirs away from heat.
- Ensure Hoses are not bound after installation.
- *Phantom Pro Reservoirs shown.*

Reservoirs to face in when installing Phantom Pro Piggyback Shocks to inner most hole.





Front Installation: *Do not tighten hardware completely unless noted.*

- Reinstall Calipers.
- Install Brake Lines and secure to A-Arms (A)(C) with components shown. Ensure no binding or interference can occur when in use.

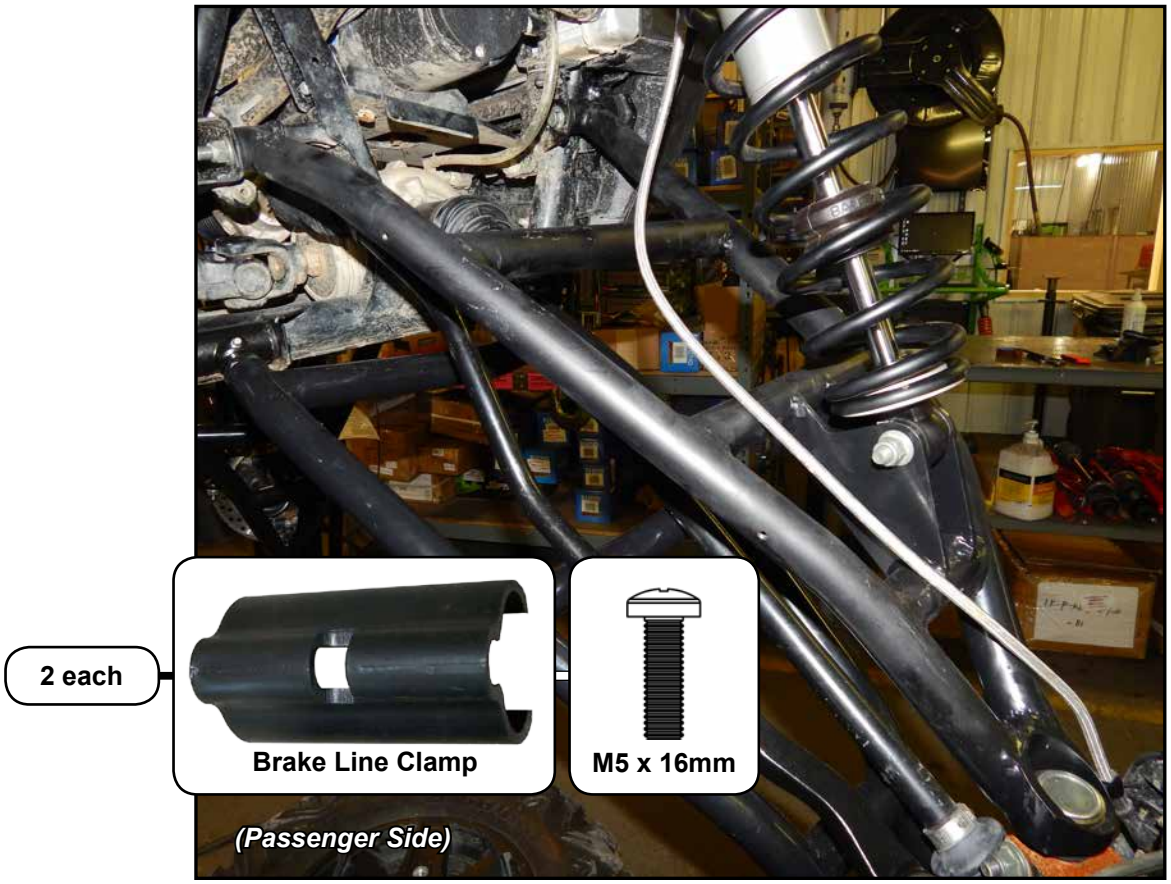

Rear components shown must be removed; *Keep all components removed from machine.*

900 models: Remove Sway Bar and Sway Bar components.
900 S or XC models: Disconnect from A-Arms only.

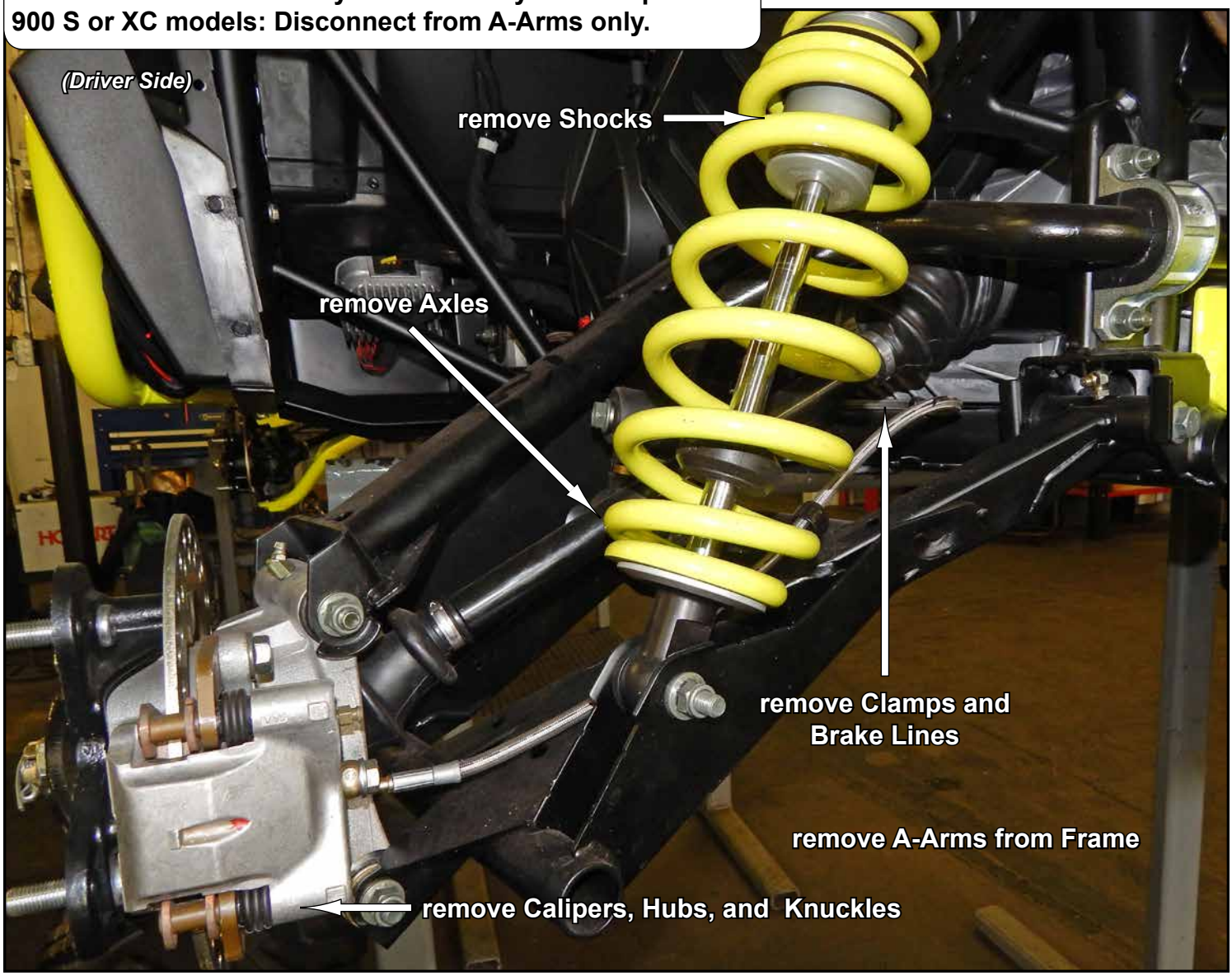

If present, relocate Relay.

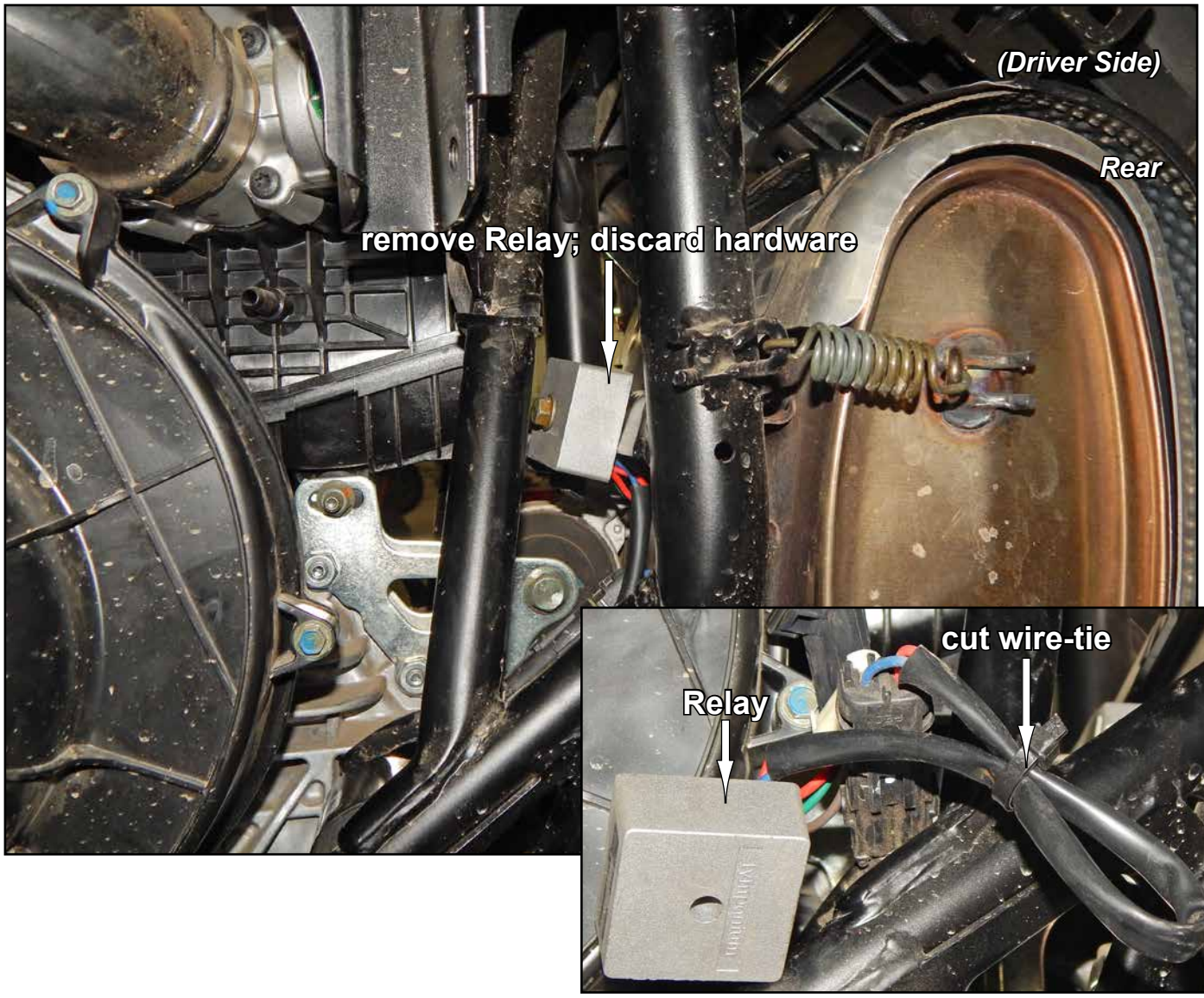



Rear A-Arms Prep: *Do not tighten hardware completely unless noted.*

- Install provided Bearings and Pivot Shafts to new A-Arms.
- Install Zerk Fittings if not present.

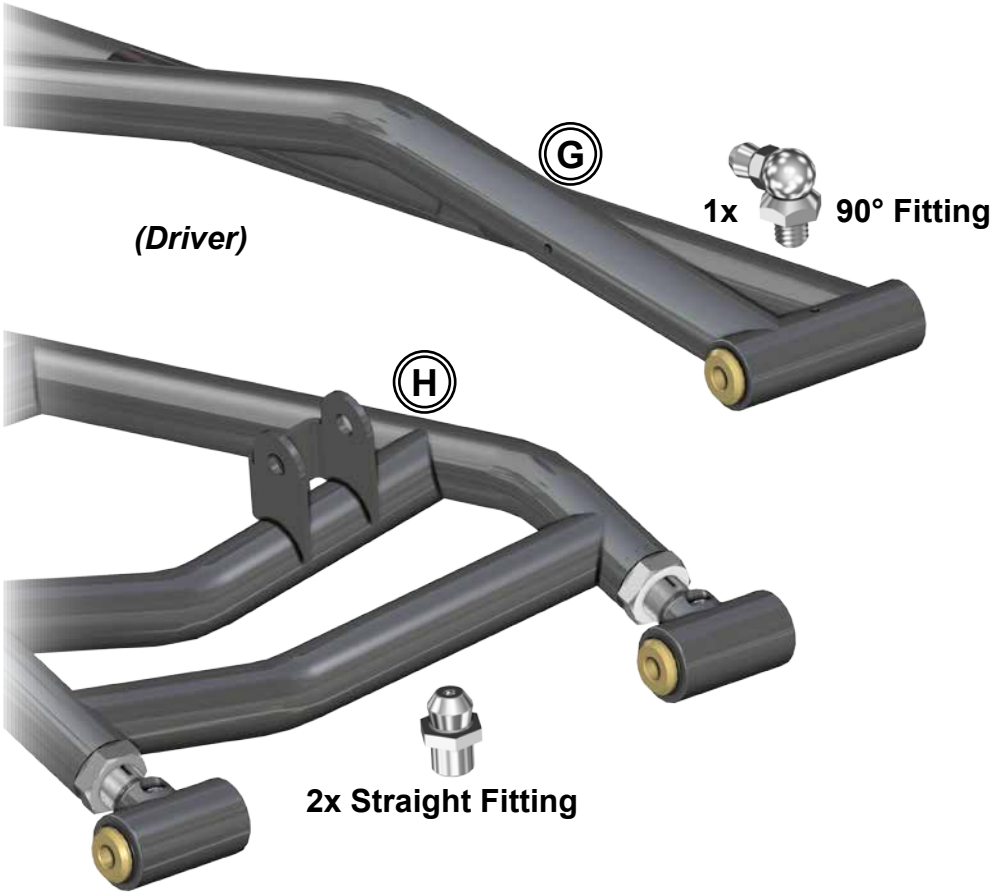



2016+ models:

Holes shown in Lower A-Arms must be drilled to Ø12mm to accept larger stock bolt.



PIVOT BLOCK SETTINGS

- Place new A-Arms onto a flat surface and verify dimension shown.
- *Negative 1° camber setting is achieved when Pivot Blocks are set to this dimension.*
- See last page for additional camber information.

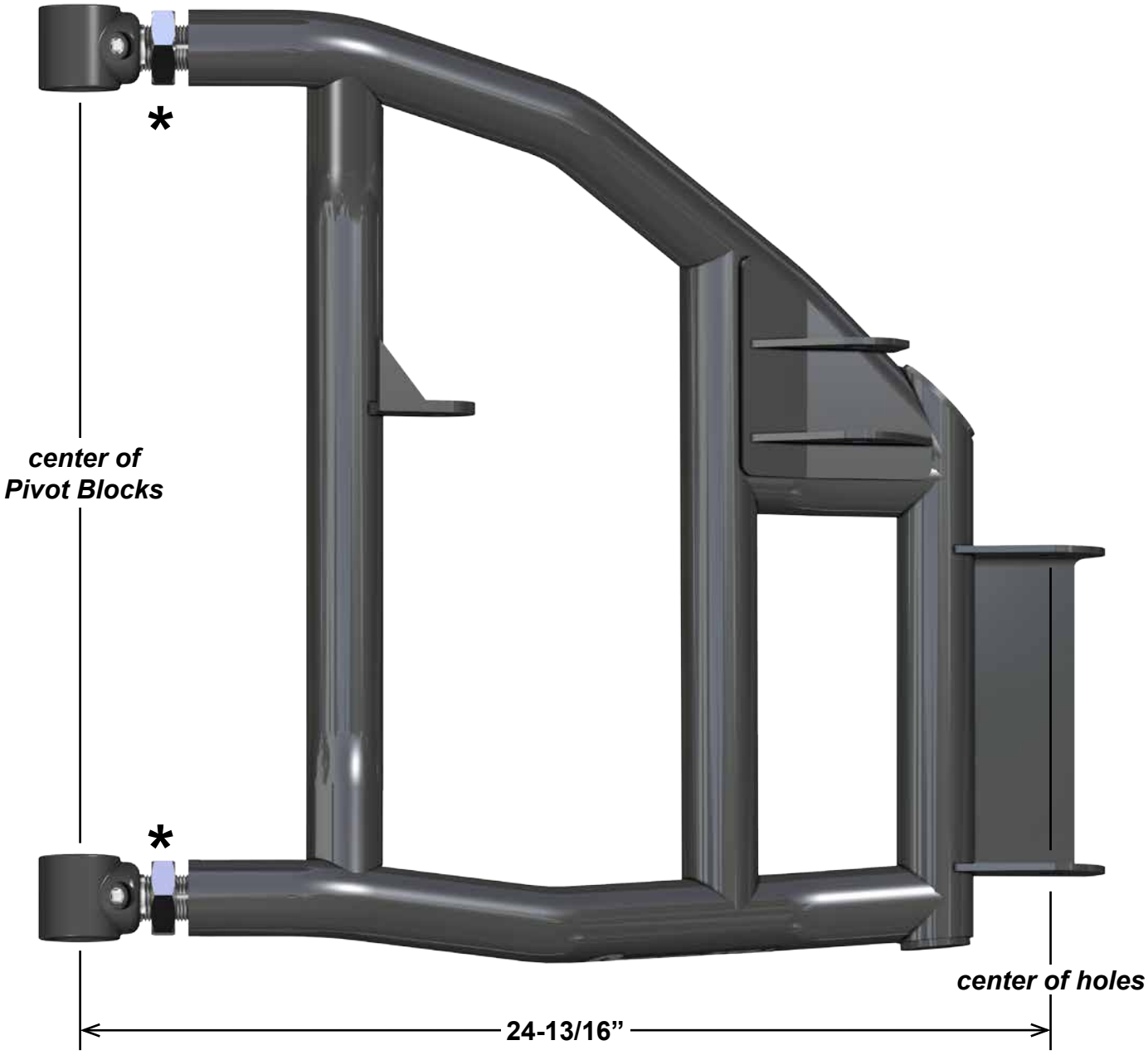

∗**Leave Jam Nuts loose. Tighten after final adjustments have been made.**

Rear Installation: *Do not tighten hardware completely unless noted.*

- Install Upper A-Arms (E)(G) to Frame with stock hardware. Tighten Upper A-Arm completely; SuperATV recommends using Loc-Tite on nuts.
- Install *front* portion of Lower A-Arms (F)(H) with stock hardware and supplied Pivot Bushing Spacer. ***Keep Nuts loose until all final adjustments have been completed.***
- Secure *rear* portion of Lower A-Arms (F)(H) with hardware shown; ***do not add M10-1.50 Nylock Nut at this time.***

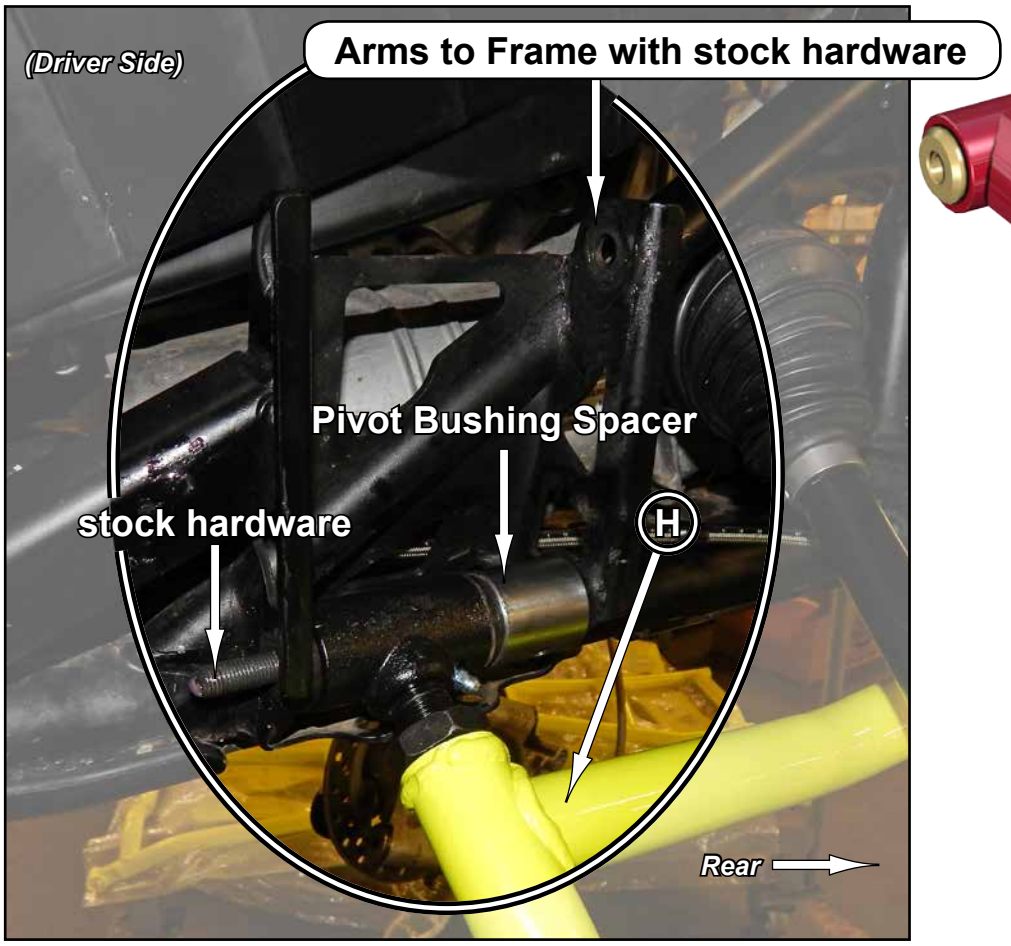

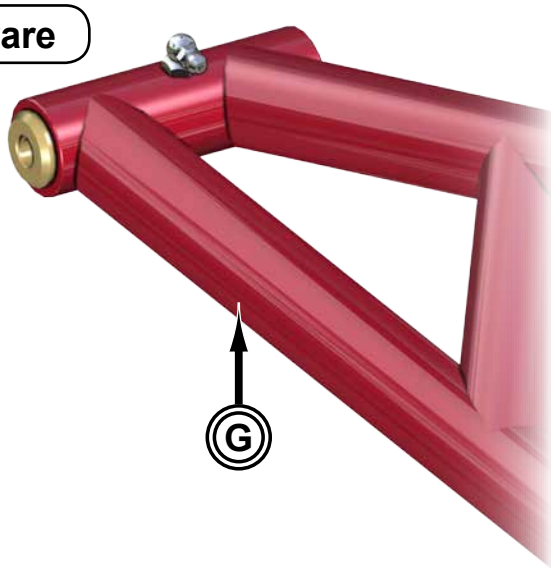

Rear Installation continued: *Do not tighten hardware completely unless noted.*

- Install Shock Bracket Base, Left (L) into stock Shock Mount with stock Shock hardware.



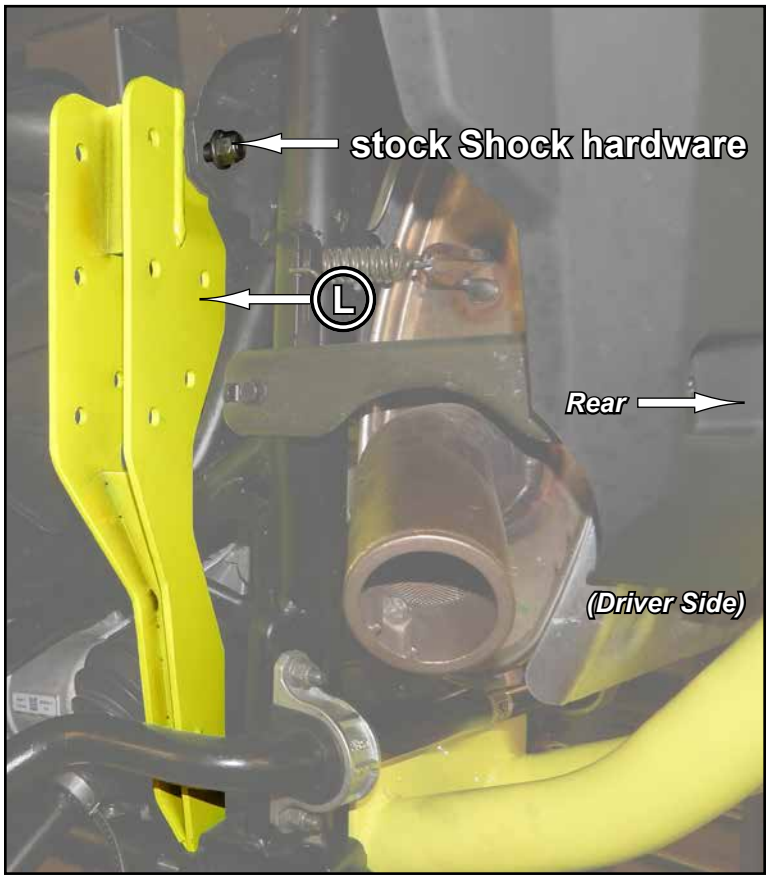

- Place lower hole in Shock Bracket Base, Left (L) onto previously installed hardware and secure with M10-1.50 Nylock Nut.

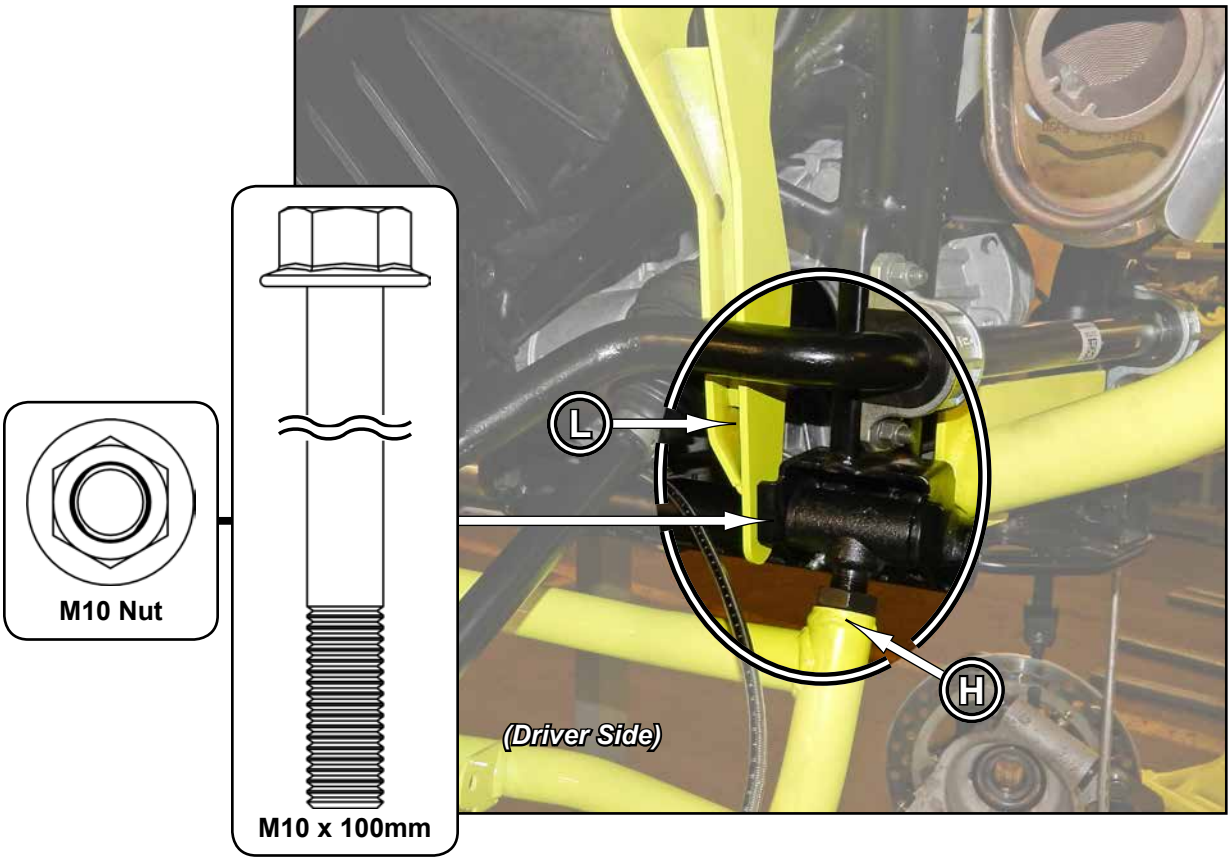

Rear Installation continued: *Do not tighten hardware completely unless noted.*

- Insert Rear Shock Bracket Brace (K) through Frame from opposite side.

Rear Shock Bracket Brace (K) must be inserted through Frame before both Shock Brackets Bases (L-M) are installed.

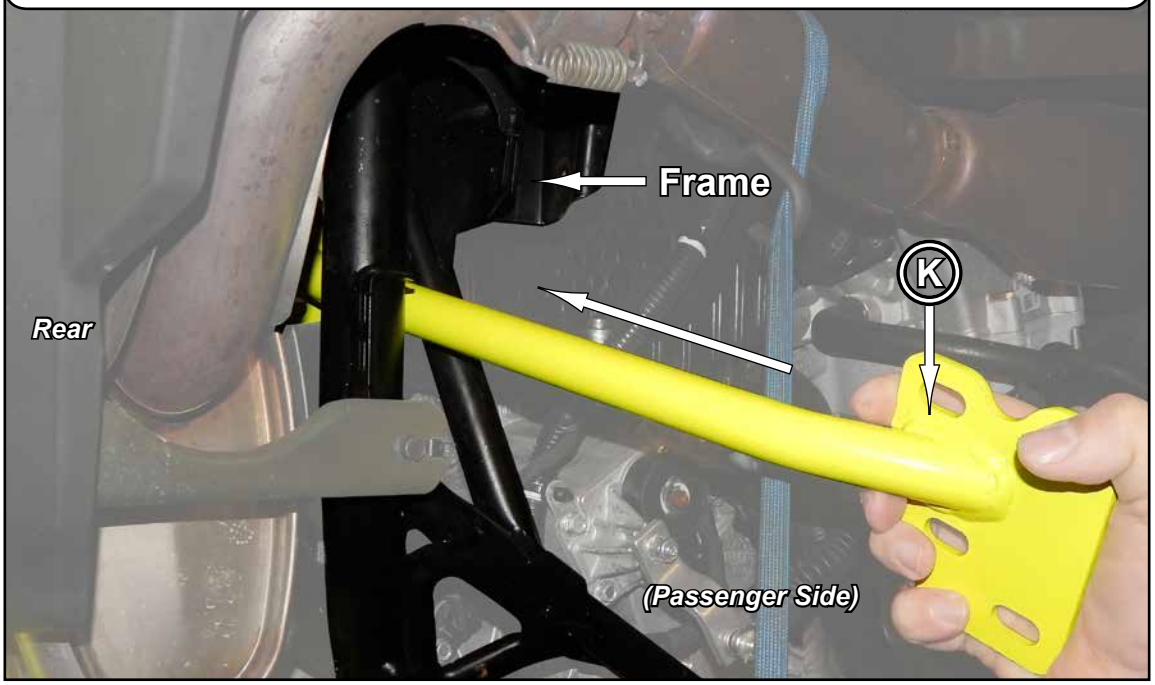

- Install Shock Bracket (N) into Shock Bracket Base, Left (L).
- Secure Shock Bracket (N), Shock Bracket Base, Left (L), and Rear Shock Bracket Brace (K) with hardware shown.
- Repeat for Shock Bracket Base, Right (M).

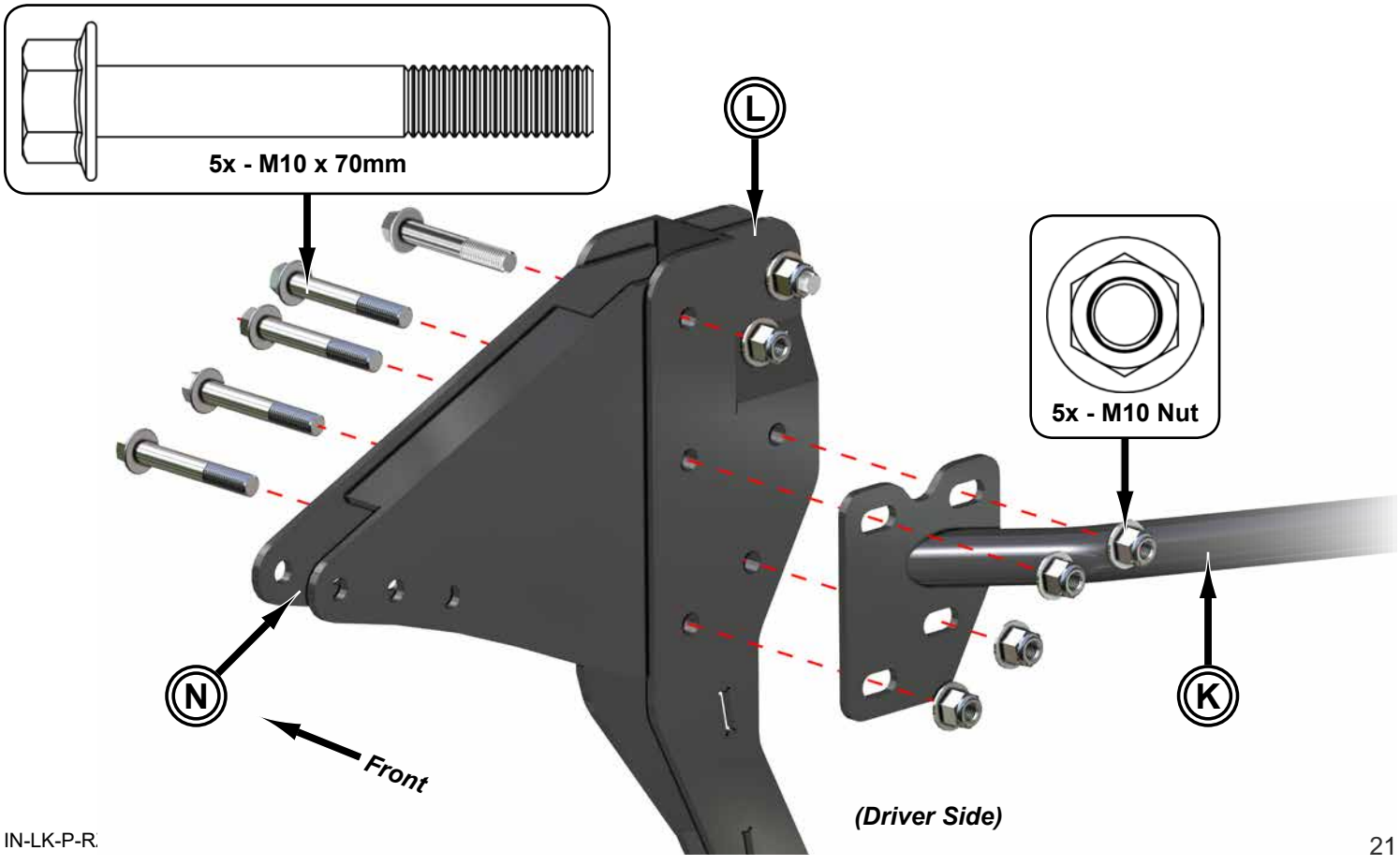

Rear Installation continued: *Do not tighten hardware completely completely unless noted.*

- Install new Axles.
- **900 models:** Install Sway Bar (Q) and Bushings with stock hardware and components.
- Reinstall Calipers, Hubs, Knuckles, etc.
- Connect Sway Bar Links to Lower A-Arms (F)(H) and Sway Bar with stock hardware.
- Determine desired amount of lift and install Shocks with hardware shown.

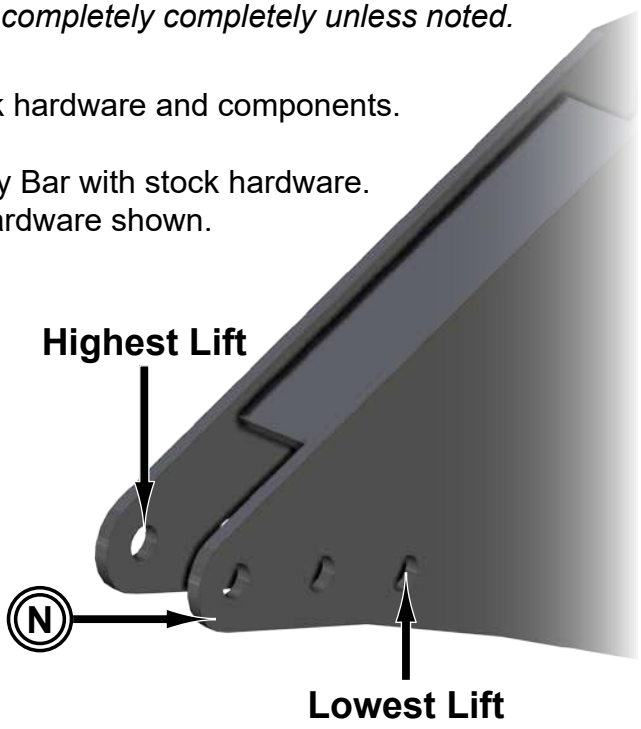

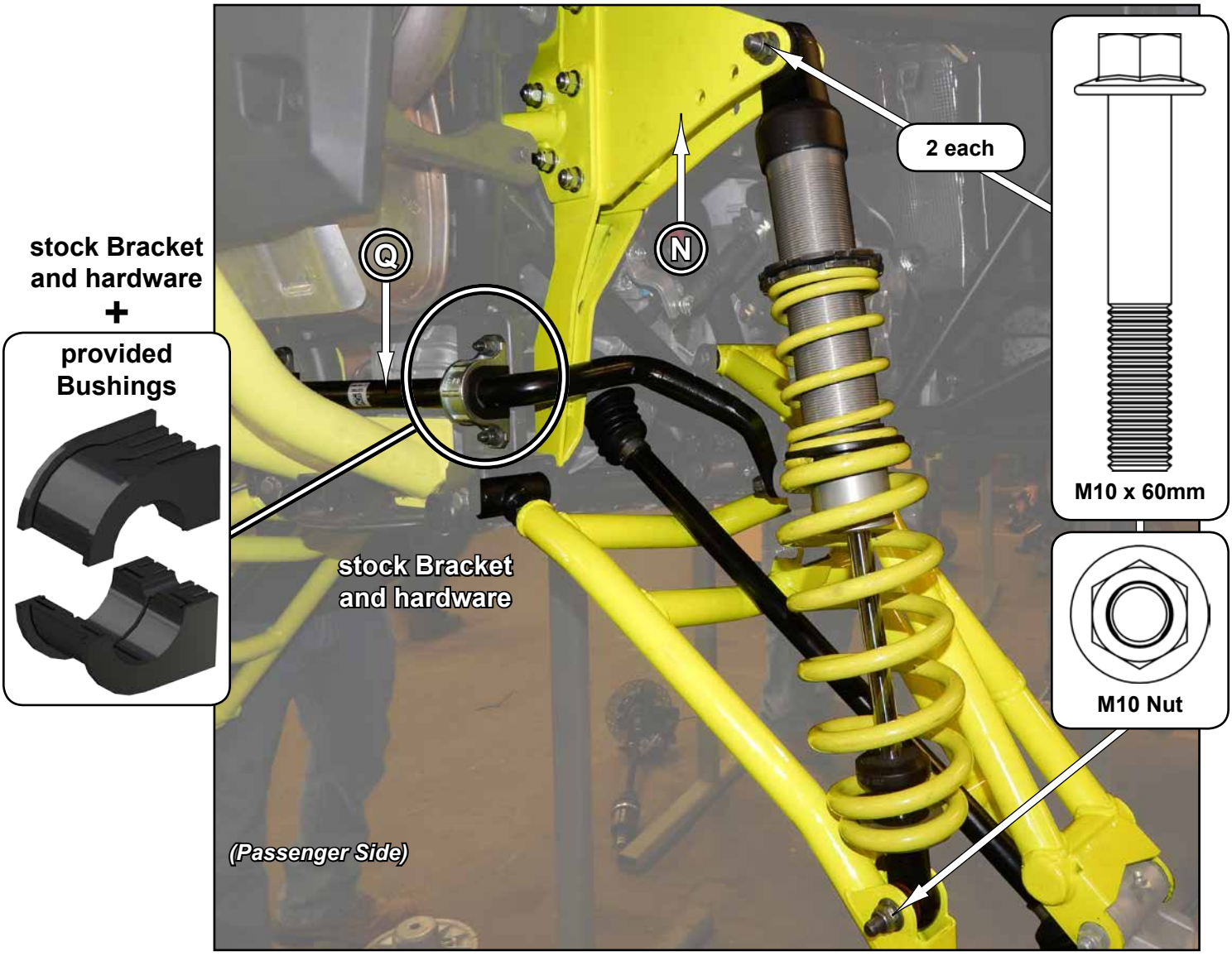

Rear Installation continued: *Do not tighten hardware completely unless noted.*

- Reinstall Calipers.
- Install Brake Lines and secure to A-Arms (E)(G) with components shown. Ensure no binding or interference can occur when in use.

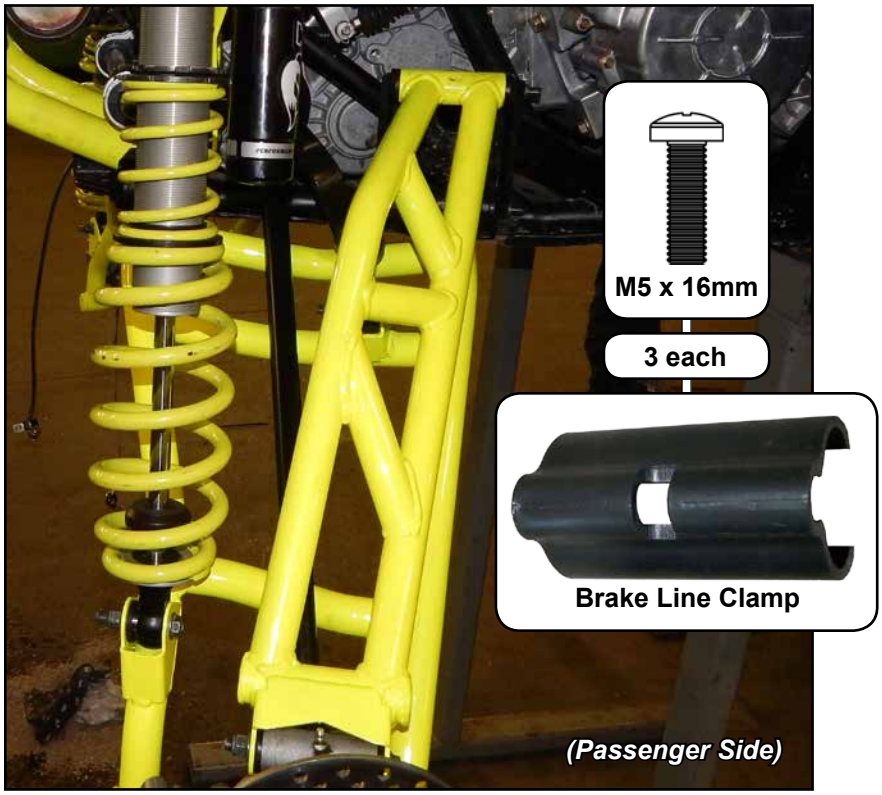

Shock Mounting Notes:

- Secure Reservoirs away from heat.
- Ensure Hoses are not bound after installation.
- *Phantom Pro Reservoirs shown.*

Reservoirs to face in when installing Phantom Pro Piggyback Shocks to inner most hole.

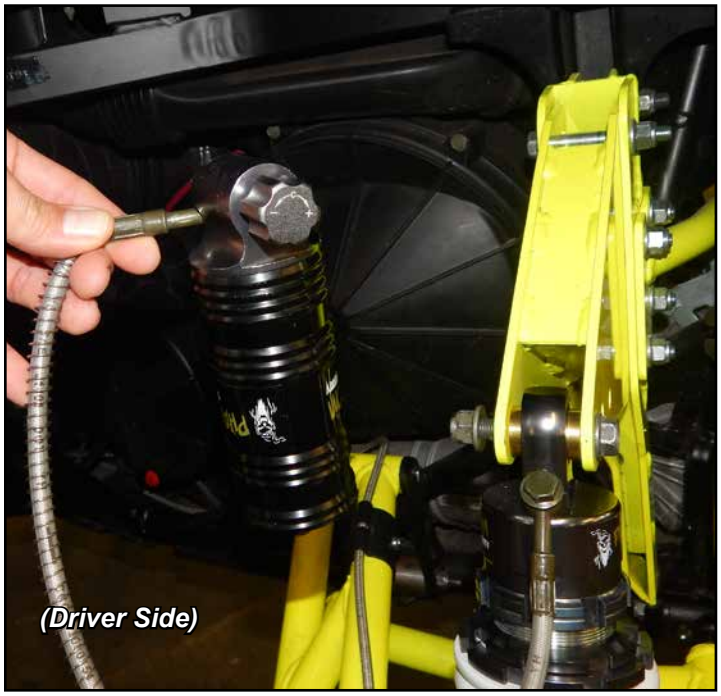

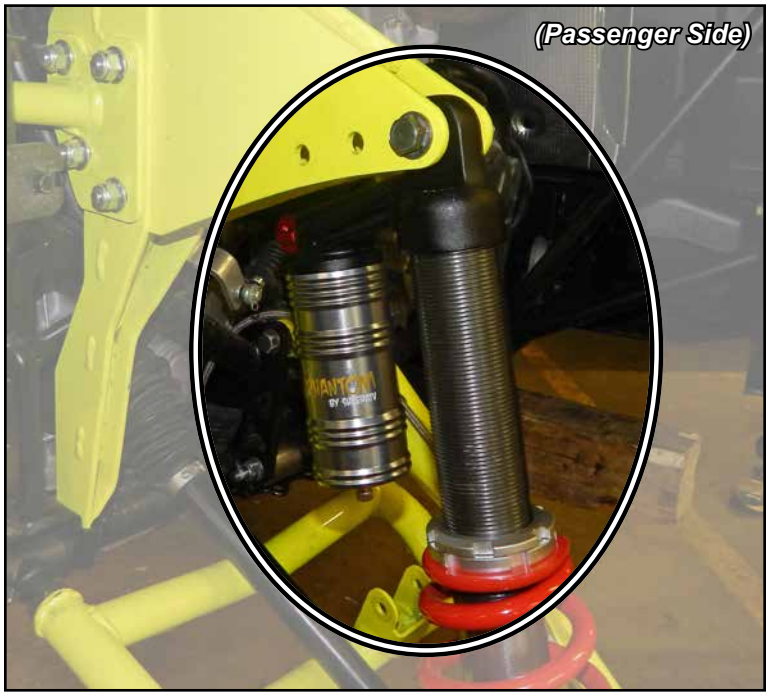

- Reinstall Tires and check Camber settings; see last page.
- Tighten Nuts on previously installed A-Arm hardware. SuperATV recommends using Loc-Tite on Nuts.

CAMBER

- **Tires must have equal air pressure before making adjustments.**
- **Adjustments to be made after all suspension components have been completely assembled.**
- **Tires must not be in contact with ground when making adjustments.**
- **Perform adjustments in small increments.**





Adjusting Camber:

- Remove A-Arms from Frame and turn Pivot Blocks to adjust camber. Reinstall Arms.
- Lower machine and settle suspension components by rolling machine back and forth several feet at a time.
- Check settings and make small adjustments as needed.
- Each time an adjustment is made, machine must be rolled back and forth to settle suspension components.
- Once desired setting is achieved, tighten hardware completely. Loc-tite on Nuts is recommended.

A NEGATIVE CAMBER SETTING OF 1° to 2° IS RECOMMENDED.

LOWER:
Too much positive camber: adjust Pivot Blocks *OUT*.
Too much negative camber: adjust Pivot Blocks *IN*.
note: 2 full turns is 1°

UPPER A-ARMS:
Too much positive camber: adjust Pivot Blocks *IN*.
Too much negative camber: adjust Pivot Blocks *OUT*.
note: 2 full turns is 1°

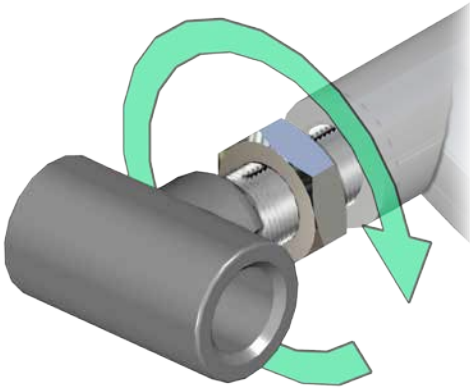

IN-Arm-Settings

2753 Michigan Road • Madison, Indiana 47250 • 855-743-3427

INSTALLATION INSTRUCTIONS

Sway Bar: for 2015 Polaris RZR® S

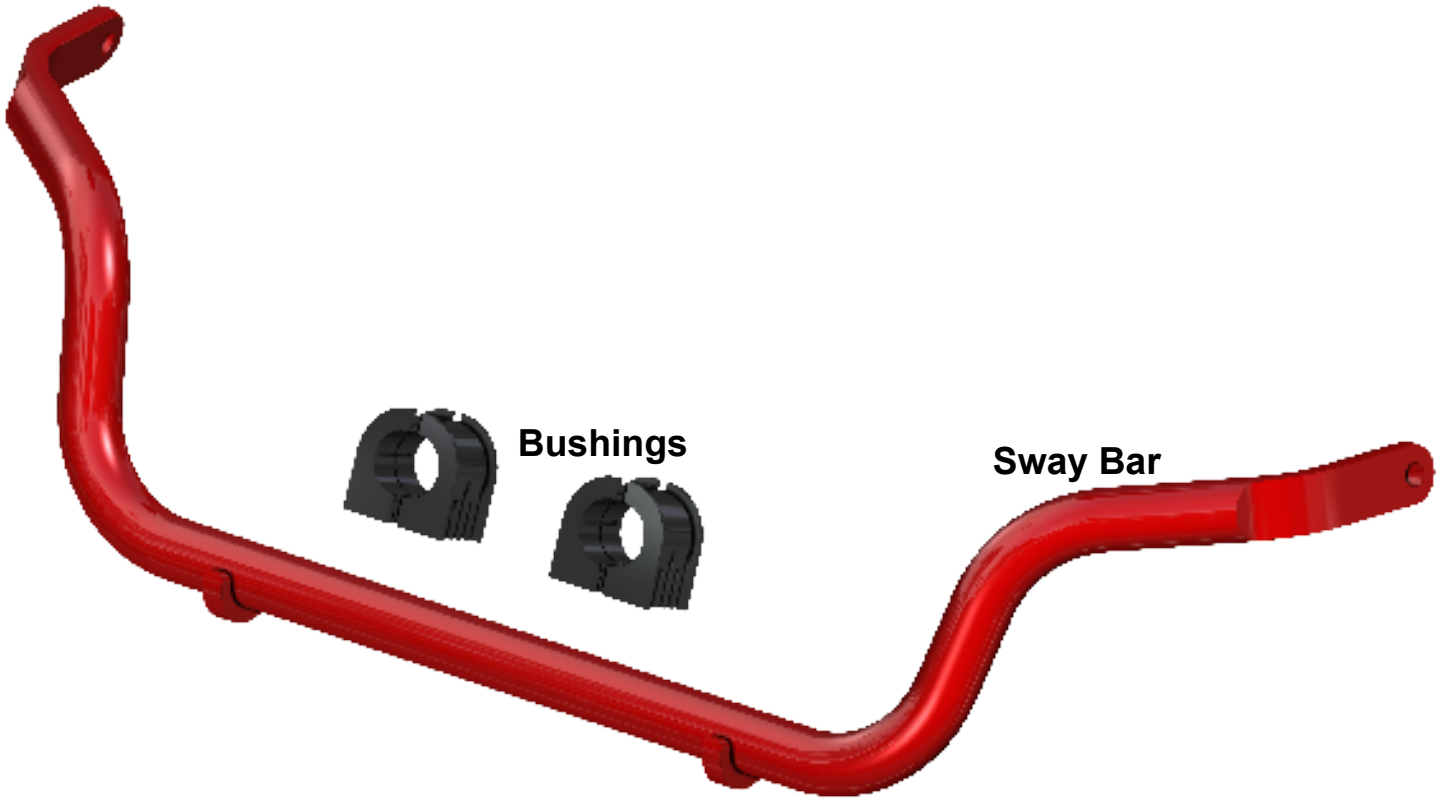

Liability Statement

SuperATV's® products are designed to best fit user's ATV/UTV under stock conditions. Adding, modifying, or fabricating any factory or aftermarket parts will void any warranty provided by SuperATV® and is not recommended. SuperATV's® products could interfere with other aftermarket accessories. If user has aftermarket products on machine, contact SuperATV® to verify that they will work together.

Although SuperATV® has thousands of satisfied customers, user should be aware that installing lift kits, long travel, or suspension kits, tires, etc. will change the ride of machine and may increase maintenance and part wear. Operating any off-road machine while, or after, consuming alcohol and/or drugs increases risk of bodily harm or death. No warranty or representation is made as to this product's ability to protect user from severe injury or death. SuperATV® urges operators and occupants to wear a helmet and appropriate riding gear at all times.

By purchasing and installing SuperATV® products, user agrees that should damages occur, SuperATV® will not be held responsible for loss of time, use, labor fees, replacement parts, or freight charges. SuperATV®, nor any 3rd party, will not be held responsible for any direct, indirect, incidental, special, or consequential damages that result from any product purchased from SuperATV®. The total liability of seller to user for all damages, losses, and causes of action, if any, shall not exceed the total purchase price paid for the product that gave rise to the claim.

SuperATV® will warranty only parts provided by SuperATV®. Any damage or problems with OEM housings, bearings, seals, or other manufacturers' products will not be covered by SuperATV®. SuperATV® parts and products are not warrantied if item was not installed properly, misused, or modified.

Installing, adding, modifying, or fabricating any factory or aftermarket product to your ATV/UTV may violate certain local, state, and federal laws. Be advised that laws vary depending on town, city, county, state, etc. Use of certain products on public streets, roads, or highways may be in violation law. The Buyer is solely and exclusively legally and personally responsible for any violation of the law by the installation or use of the product. You must abide by all local, state, and federal laws, including but not limited to vehicle safety, traffic laws, and ordinances. It is your responsibility to know the laws and how they apply to you.

The Buyer is responsible to fully understand the capability and limitations of his/her vehicle according to manufacturer specifications, warnings and instructions and agrees to hold SuperATV® harmless from any damage resulting from failure to adhere to such specifications, warnings and/ or instructions. The Buyer is also responsible to obey all applicable federal, state, and local laws and ordinances when operating his/her vehicle while using this product, and the Buyer agrees to hold SuperATV® harmless from any violation thereof.

Need help with your installation?

sales@superatv.com

www.superatv.com

1-855-743-3427

8:00am - 8:00pm EST M-Th
8:00am - 7:00pm EST Friday
9:00am - 2:00pm EST Saturday

Read instructions and view illustrations before beginning.

Thank You For Choosing

© 2015 SuperATV.com®. All Rights Reserved.

Rear components shown must be removed; *Keep all components removed from machine.*





Install new Sway Bar as shown.

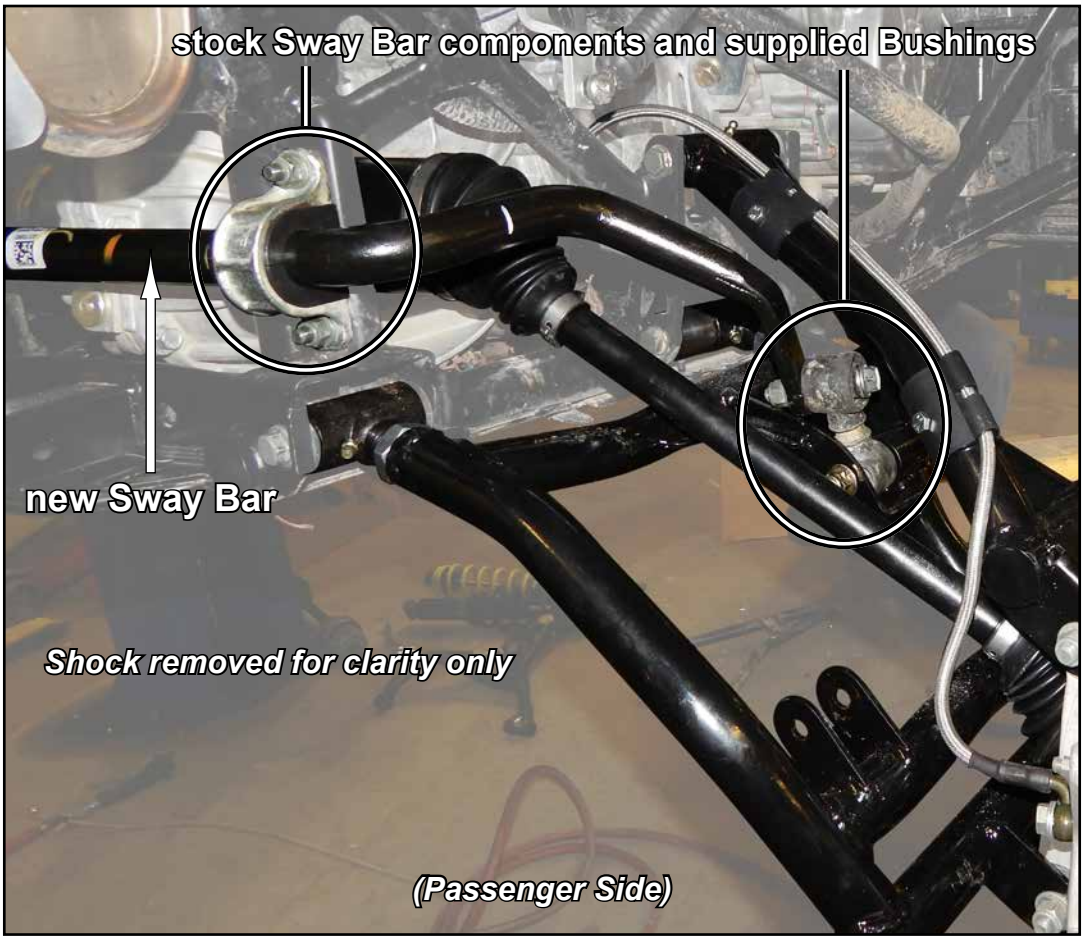

2753 Michigan Road • Madison, Indiana 47250 • 855-743-3427

SETUP GUIDE

Phantom Fully Adjustable Shocks

PRELOAD NUT
- Cranking down will stiffen Springs and raise machine; use, not included, Spanner Wrench.

SPRINGS
- Contact SuperATV for different Spring options.

REBOUND ADJUSTOR
- Counter Clock Wise softens Shock (holds Shock down longer).
- Clock Wise stiffens Shock (holds Shock down shorter).





COMPRESSION ADJUSTOR
- Counter Clock Wise softens Shock.
- Clock Wise stiffens Shock.

Do not set Compression Adjustor to full clockwise position. Shock failure will occur.

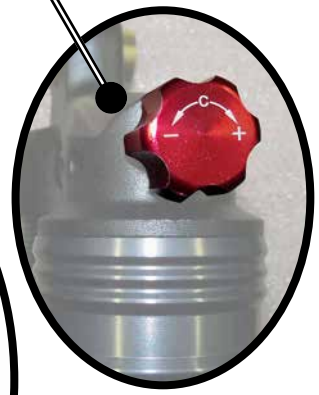



NITROGEN FILL VALVE
- More gas results in stiffer compression.
- Less gas results in softer compression.

Do not use needle valve gauge (tire gauge). Schrader Valve tool must be used.

© 2012 SuperATV.com® All Rights Reserved.

MAINTENANCE

- Inspect Shocks before riding.
- Rinse mud and debris away after riding. ***DO NOT USE A HIGH PRESSURE WASHER***. Standard garden hose is suitable.

SERVICE

- Shock servicing and rebuilding requires special tools and knowledge. SuperATV recommends using a trained professional or service center. Depending on usage, SuperATV recommends servicing every year for racing applications, and every (2) years under normal riding applications.
- Use synthetic medium #10 shock oil.

WARRANTY

- Shocks include a (3) months free of manufacturing defects warranty.



Spanner Wrench
(NOT INCLUDED)

When adjusting Pre-load Nuts, use Spanner Wrench

Liability Statement

SuperATV's® products are designed to best fit user's ATV/UTV under stock conditions. Adding, modifying, or fabricating any factory or aftermarket parts will void any warranty provided by SuperATV® and is not recommended. SuperATV's® products could interfere with other aftermarket accessories. If user has aftermarket products on machine, contact SuperATV® to verify that they will work together.

Although SuperATV® has thousands of satisfied customers, user should be aware that installing lift kits, long travel, or suspension kits, tires, etc. will change the ride of machine and may increase maintenance and part wear. Operating any off-road machine while, or after, consuming alcohol and/or drugs increases risk of bodily harm or death. No warranty or representation is made as to this product's ability to protect user from severe injury or death. SuperATV® urges operators and occupants to wear a helmet and appropriate riding gear at all times.

By purchasing and installing SuperATV® products, user agrees that should damages occur, SuperATV® will not be held responsible for loss of time, use, labor fees, replacement parts, or freight charges. SuperATV®, nor any 3rd party, will not be held responsible for any direct, indirect, incidental, special, or consequential damages that result from any product purchased from SuperATV®. The total liability of seller to user for all damages, losses, and causes of action, if any, shall not exceed the total purchase price paid for the product that gave rise to the claim.

SuperATV® will warranty only parts provided by SuperATV®. Any damage or problems with OEM housings, bearings, seals, or other manufacturers' products will not be covered by SuperATV®. SuperATV® parts and products are not warrantied if item was not installed properly, misused, or modified.

Installing, adding, modifying, or fabricating any factory or aftermarket product to your ATV/UTV may violate certain local, state, and federal laws. Be advised that laws vary depending on town, city, county, state, etc. Use of certain products on public streets, roads, or highways may be in violation law. The Buyer is solely and exclusively legally and personally responsible for any violation of the law by the installation or use of the product. You must abide by all local, state, and federal laws, including but not limited to vehicle safety, traffic laws, and ordinances. It is your responsibility to know the laws and how they apply to you.

The Buyer is responsible to fully understand the capability and limitations of his/her vehicle according to manufacturer specifications, warnings and instructions and agrees to hold SuperATV® harmless from any damage resulting from failure to adhere to such specifications, warnings and/ or instructions. The Buyer is also responsible to obey all applicable federal, state, and local laws and ordinances when operating his/her vehicle while using this product, and the Buyer agrees to hold SuperATV® harmless from any violation thereof.

Need help with your installation?

sales@superatv.com

www.superatv.com

1-855-743-3427

8:00am - 8:00pm EST M-Th
8:00am - 7:00pm EST Friday
9:00am - 2:00pm EST Saturday

Thank You For Choosing

SUPERATV.COM®