2753 Michigan Road • Madison, Indiana 47250 • 855-743-3427

INSTALLATION INSTRUCTIONS
Power Steering Kit:
for Arctic Cat® Wildcat Trail

Item	Description
A	Motor Mount
B	Stiffener
C	Support Plate
D	Upper Shaft
R	Connectors
S	Lower Shaft

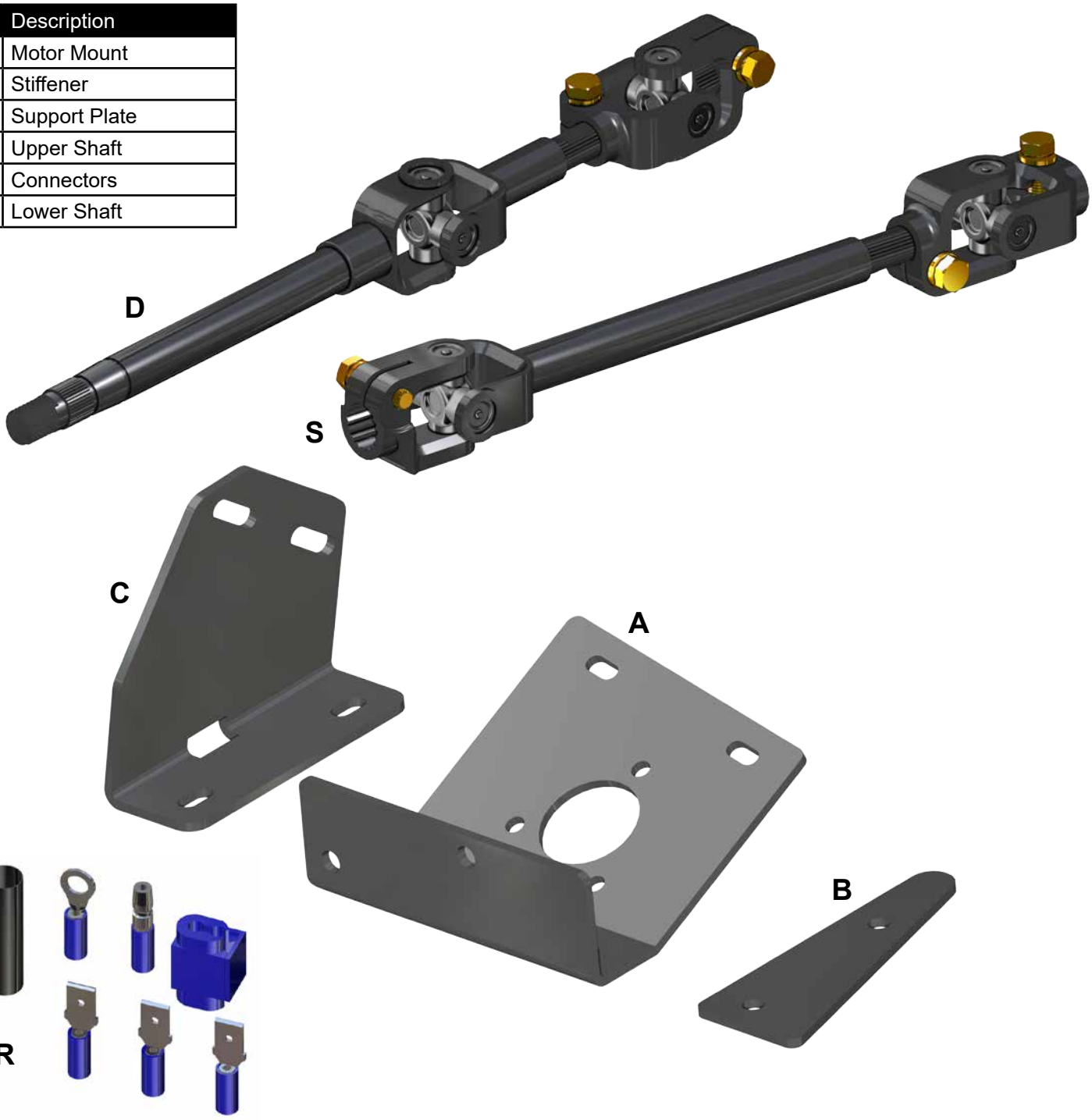

(Kit contents continue on following page)

Need help with your installation?

sales@superatv.com

www.superatv.com

1-855-743-3427

8:00am - 8:00pm EST M-Th
8:00am - 7:00pm EST Friday
9:00am - 2:00pm EST Saturday

Read instructions and view illustrations before beginning.

Thank You For Choosing

© 2014 SuperATV.com®. All Rights Reserved.

Rev IN-PS-5-51 2/28/2018

*Connections

- Before installing, ensure that all Gaskets in electrical connections are properly seated.
- If Gaskets are not seated use a Flathead Screwdriver to seat.



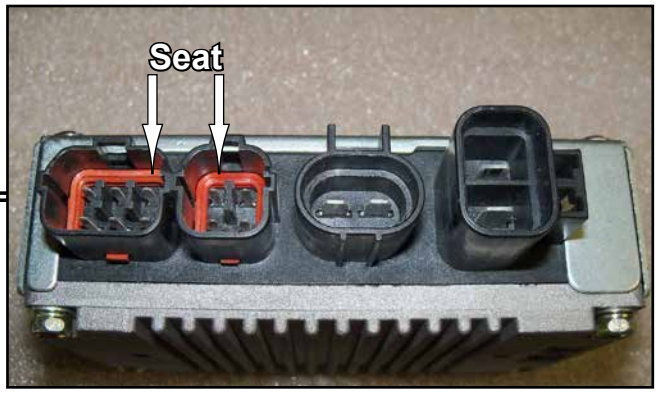

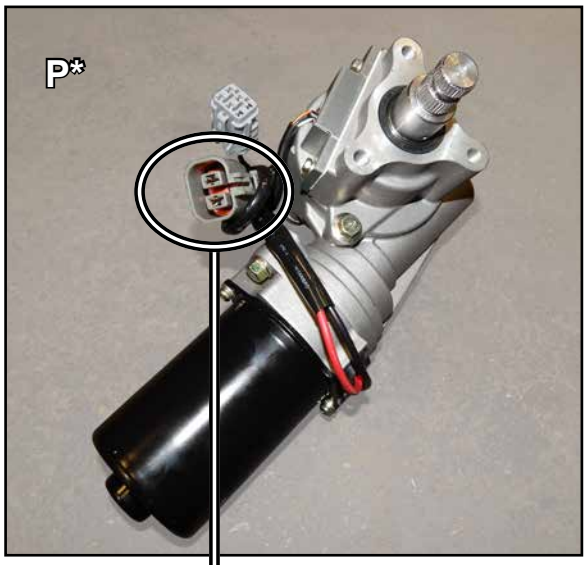

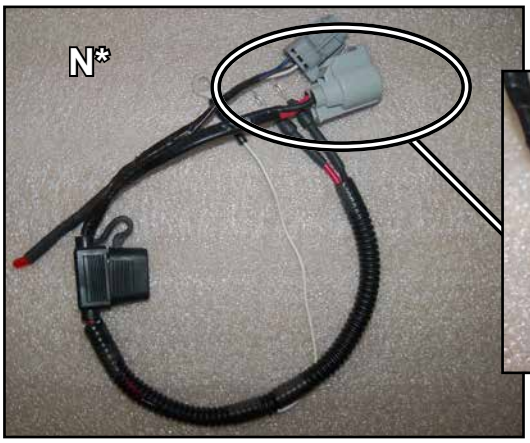



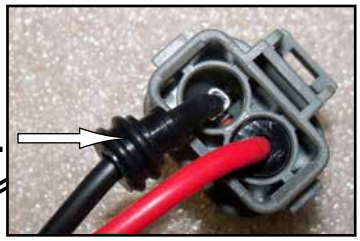

Push in....

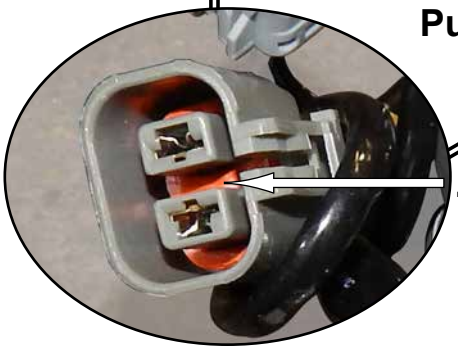

....Seat

Item	Description
Q	ECU
P	Motor
N	Wiring Harness

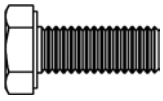

2x **M6-1.0 x 16mm Lg. HHCS**
-includes washers (not shown)



6x **M8-1.25 Nylock Nut**

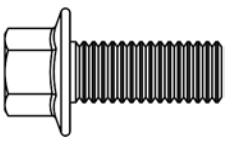

3x **M8-1.25 x 20mm Lg. FHCS**

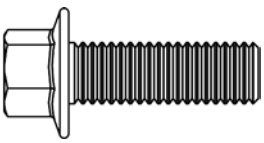

6x **M8-1.25 x 25mm Lg. FHCS**

Removal: *Keep all components removed from machine.*

1. Remove Hood and Passenger Seat.
2. Remove Door Strikers, Steering Wheel, and hardware from Tilt Adjustor. See Figs. 1 - 1a.
3. Remove Push Pins and hardware securing Dash. See Figs. 2 - 2a.

- Unplug Wire Harness' from Dash.
- Remove Dash.

4. Unbolt Steering Shaft from Rack and Pinion, remove Steering Tube, and remove Steering Shaft.



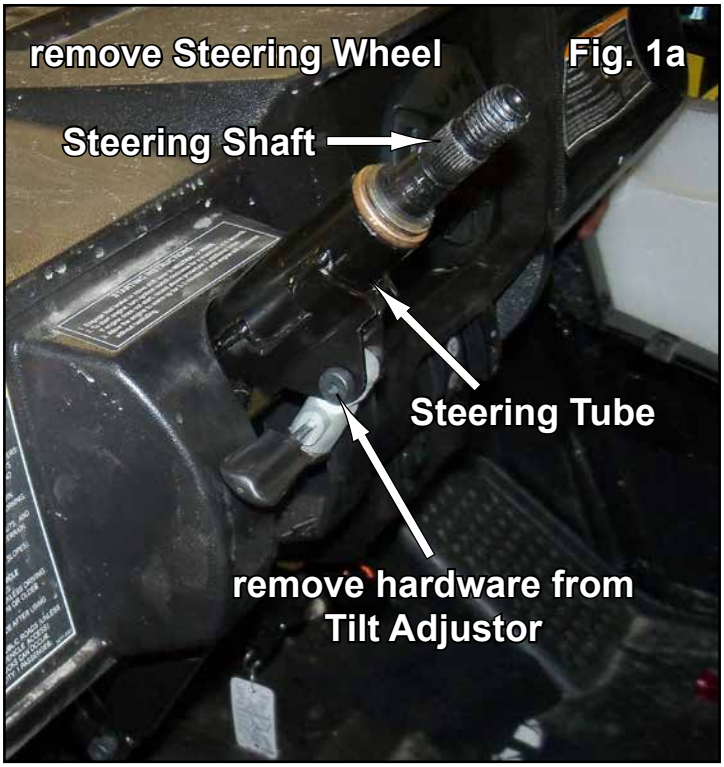

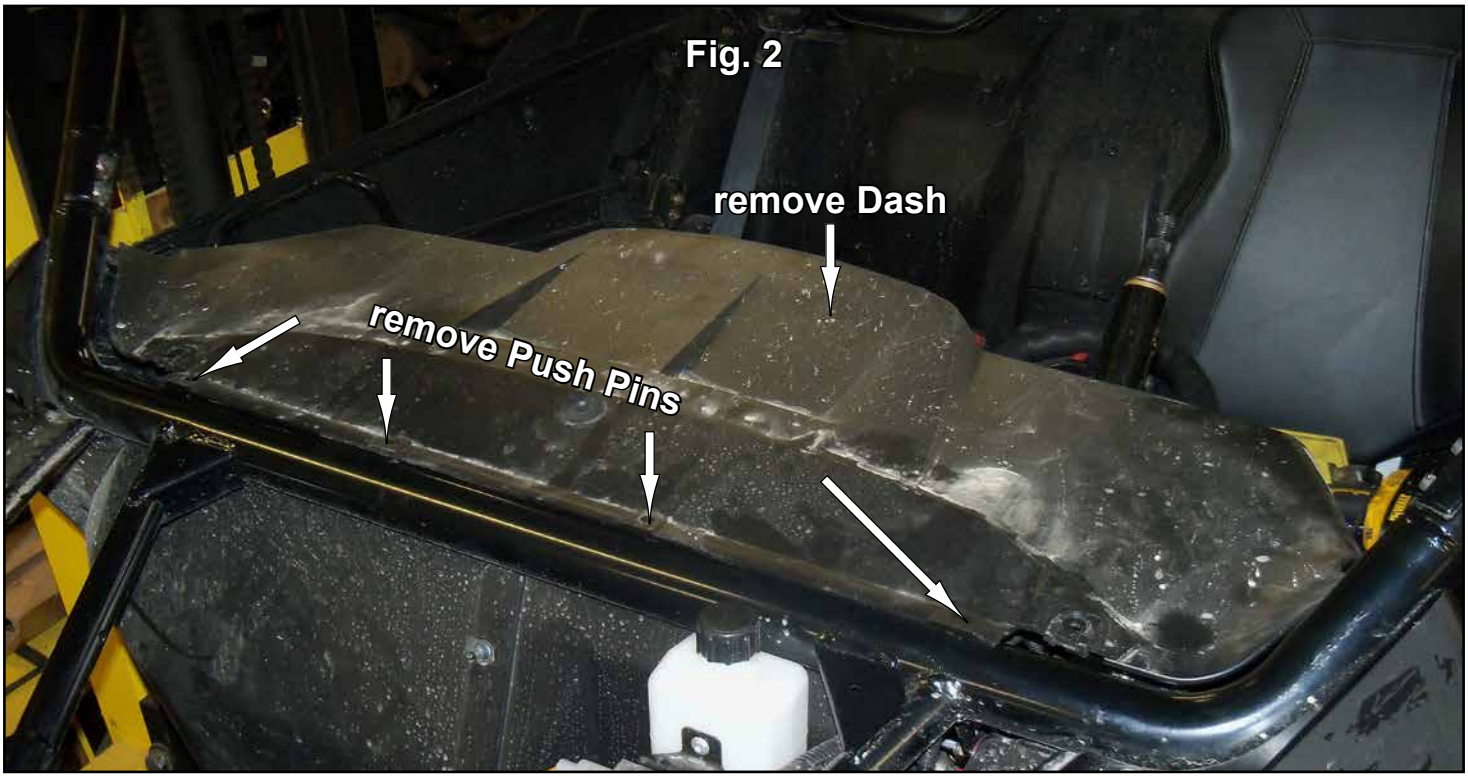

(removal illustrations continue on following page)


Fig. 2a
remove all Push Pins from under Dash

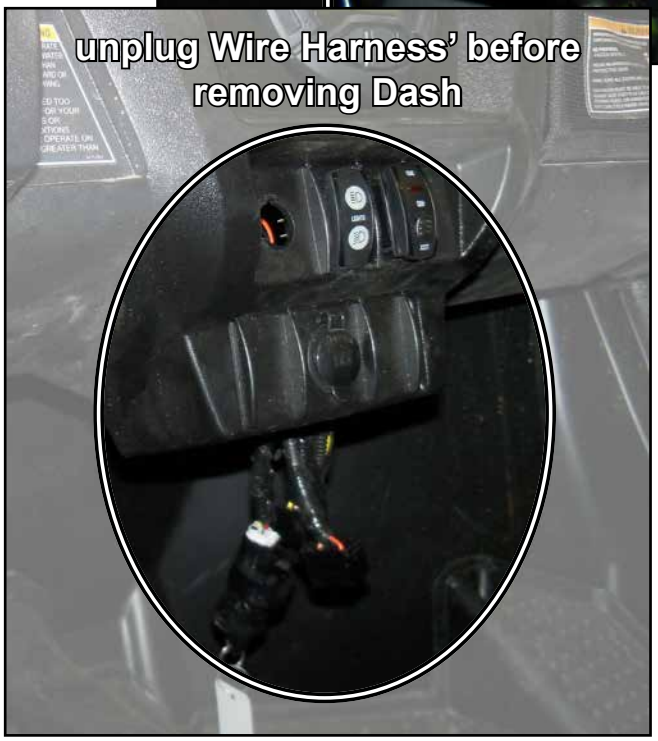
unplug Wire Harness' before removing Dash

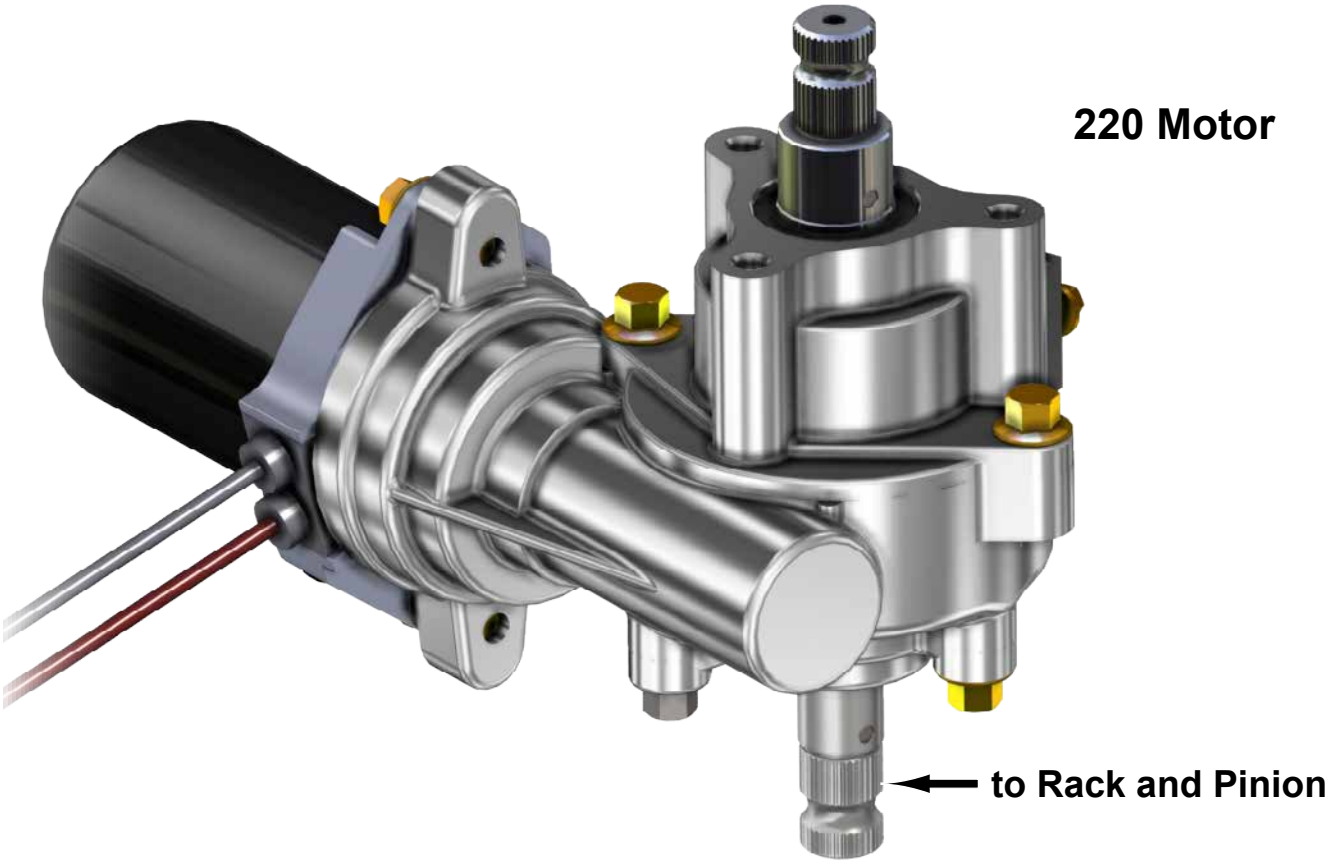
220 Motor
to Rack and Pinion

Installation: *Do not tighten hardware completely unless noted.*

1. Insert Lower Shaft (S) through Firewall and secure to Rack and Pinion with supplied hardware. See Figs. 1 - 1a. Tighten completely.
2. Install Motor (P) to Lower Shaft (S) and secure with supplied hardware. See Figs. 2 - 2a.
3. Install Motor Mount (A) to Motor (P) with M8-1.25 x 20mm Lg. FHCS. See Fig. 3.

- Install assembly and Stiffener (B) to Frame with M8-1.25 x 25mm Lg. FHCS and M8-1.25 Nylock Nuts. See Figs. 4 - 4a.

4. Install Support Plate (C) to Frame with M8-1.25 x 25mm Lg. FHCS and M8-1.25 Nylock Nuts. See Fig. 5.

- Secure Support Plate (C) to Motor Mount (A) with M8-1.25 x 25mm Lg. FHCS and M8-1.25 Nylock Nuts. See Fig. 5.

5. Install Control Module (Q) to Frame with M6-1.0 x 16mm Lg. HHCS. See Figs. 6 - 6a.

- Plug in Wiring Harness (N) but do not wire at this time.

6. Insert Upper Shaft (D) into Steering Tube and reinstall Steering Tube to Frame with stock hardware. Secure Upper Shaft (D) to Motor (P) with supplied hardware. Temporarily install stock Tilt Adjustor hardware to hold Steering Tube in place; remove when reinstalling Dash. See Figs. 7 - 7b.
7. Go to Wiring Details pages 12 - 13.
8. Tighten all hardware completely, reinstall Dash, Tilt Adjustor, and Steering Wheel.
9. Reverse steps taken during removal and reinstall necessary components.

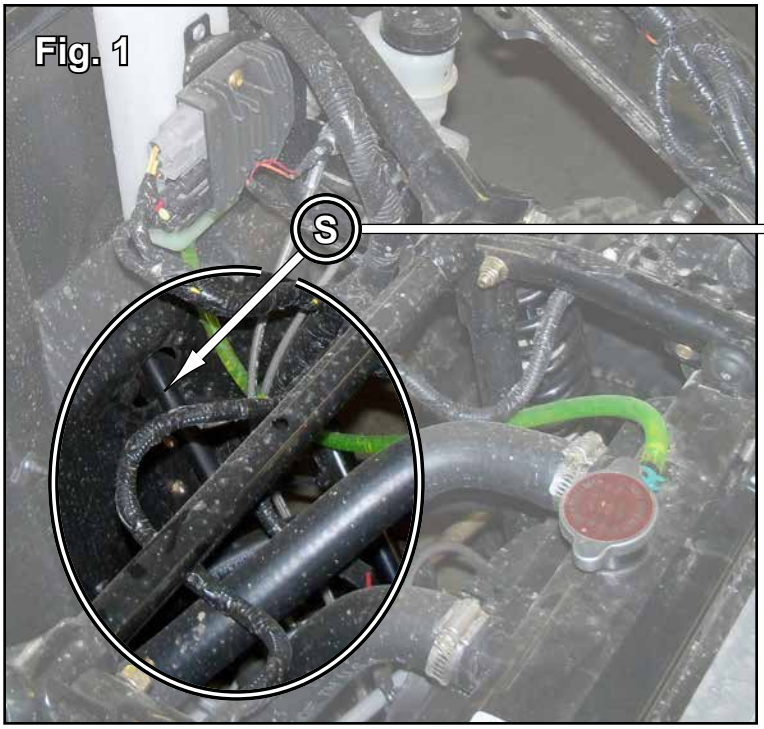

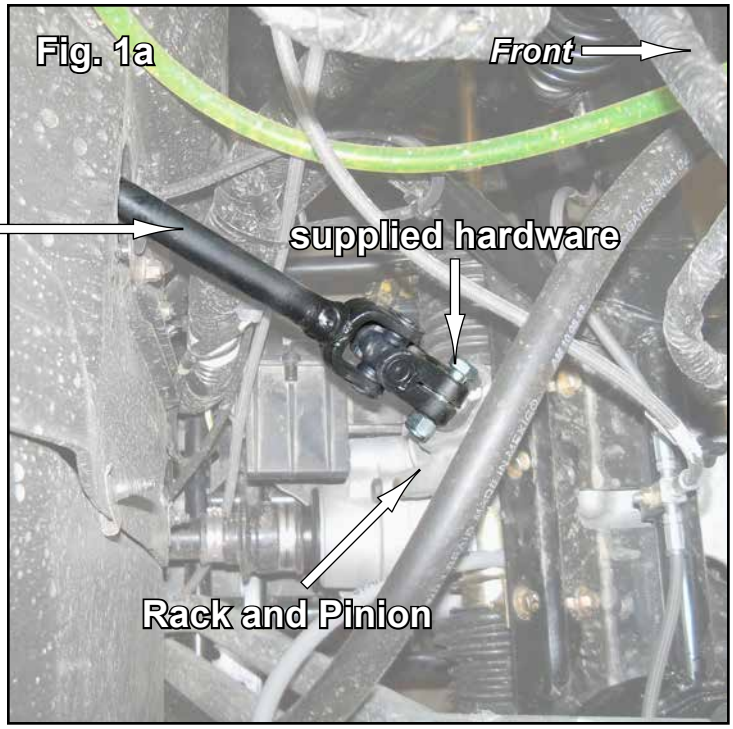

(installation illustrations continue on following pages)



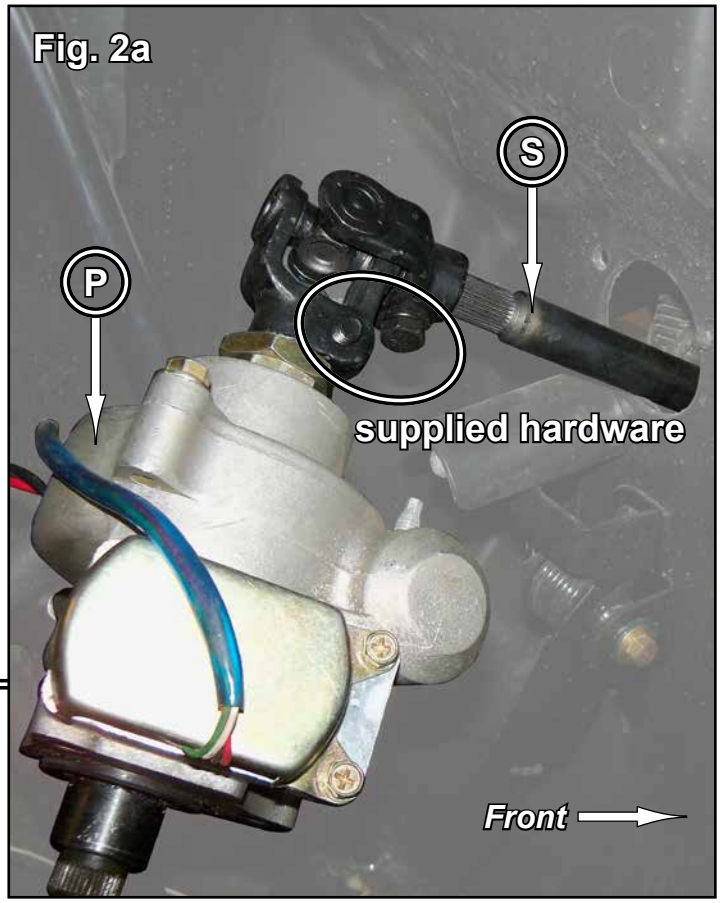

Fig. 3

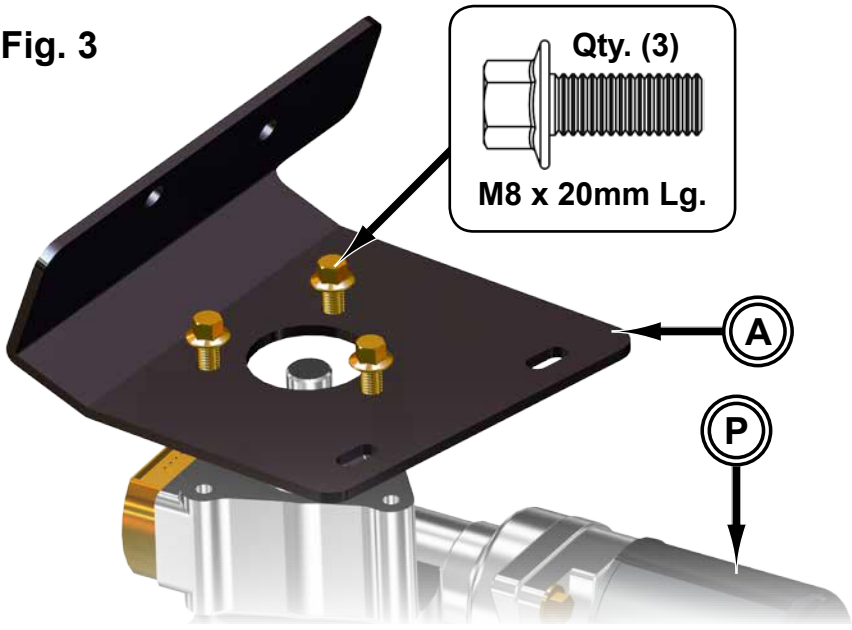

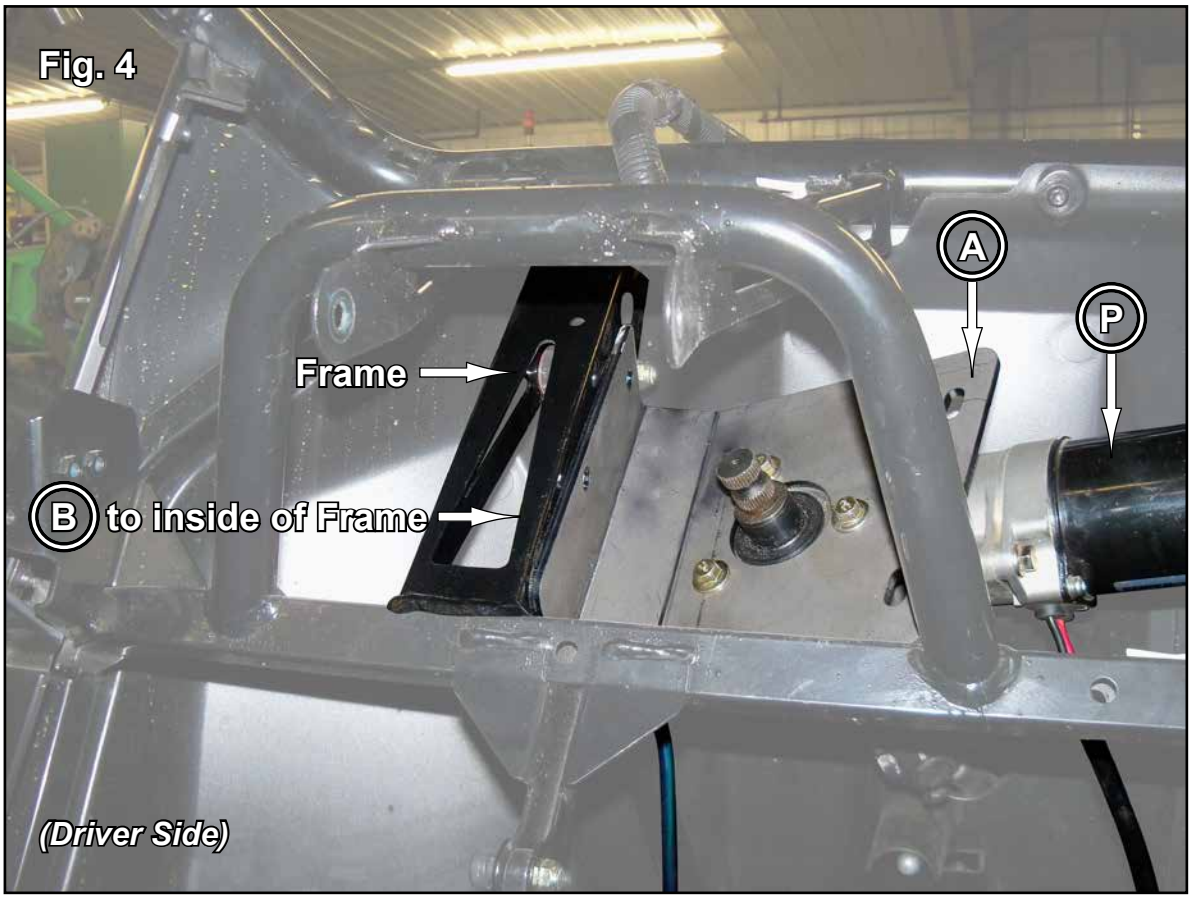
Fig. 4
A
P
Frame
B to inside of Frame
(Driver Side)

Fig. 4a

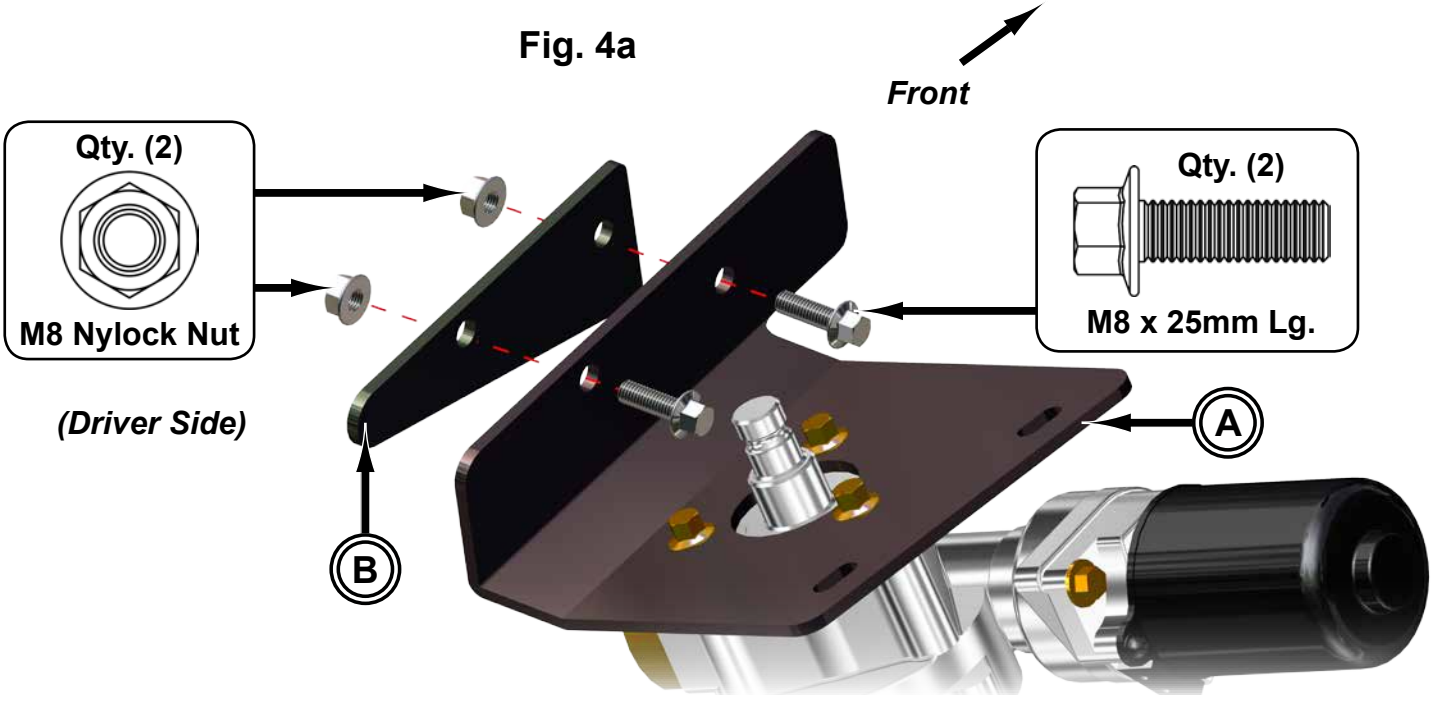
Front
Qty. (2)
M8 Nylock Nut
Qty. (2)
M8 x 25mm Lg.
A
B
(Driver Side)
(Passenger Side)

Fig. 5

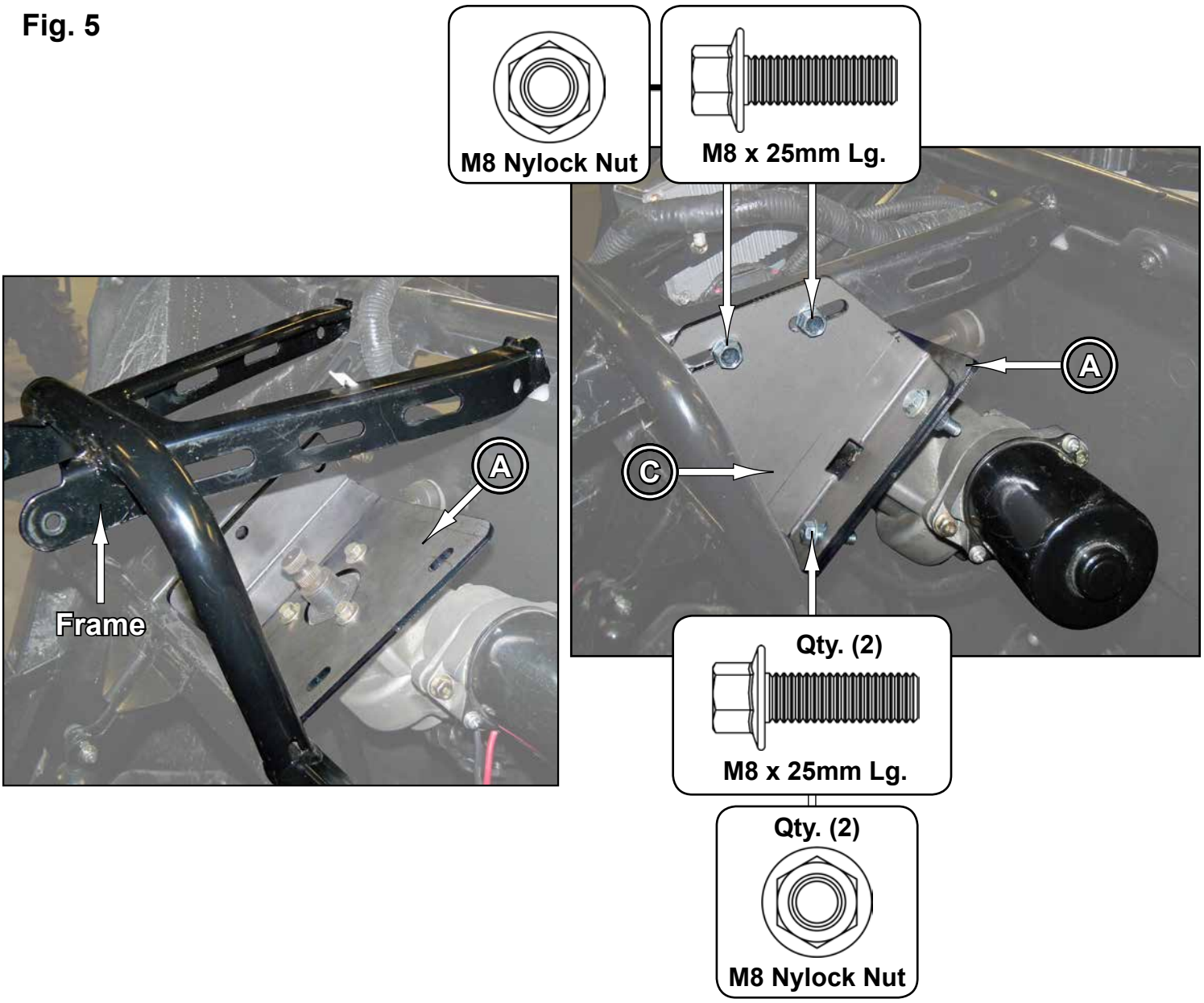
M8 Nylock Nut
M8 x 25mm Lg.
A
C
Frame
A
Qty. (2)
M8 x 25mm Lg.
Qty. (2)
M8 Nylock Nut

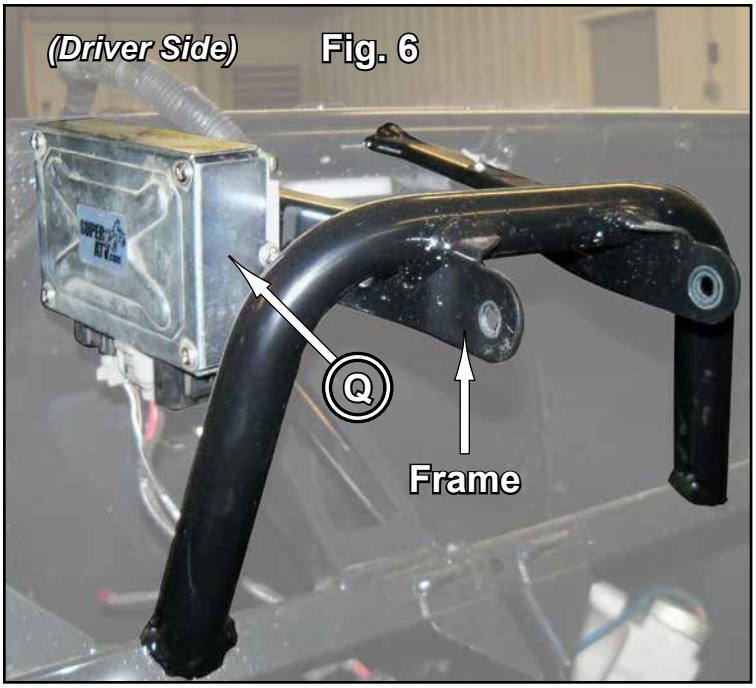
(Driver Side)
Fig. 6
Q
Frame

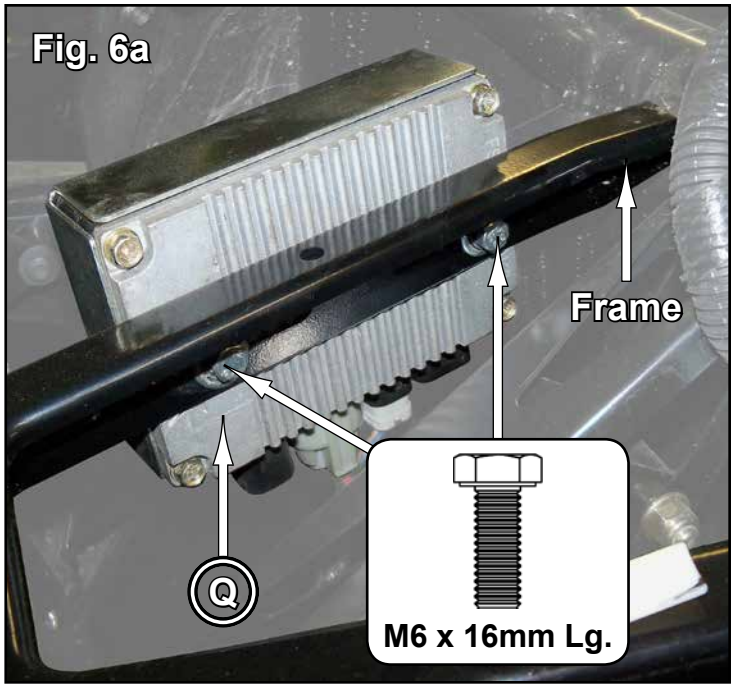
Fig. 6a
Frame
Q
M6 x 16mm Lg.

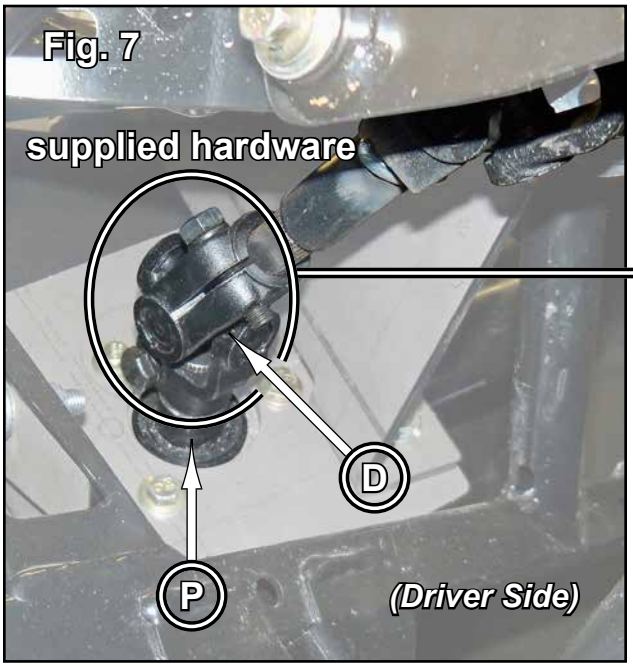
Fig. 7
supplied hardware
D
P
(Driver Side)

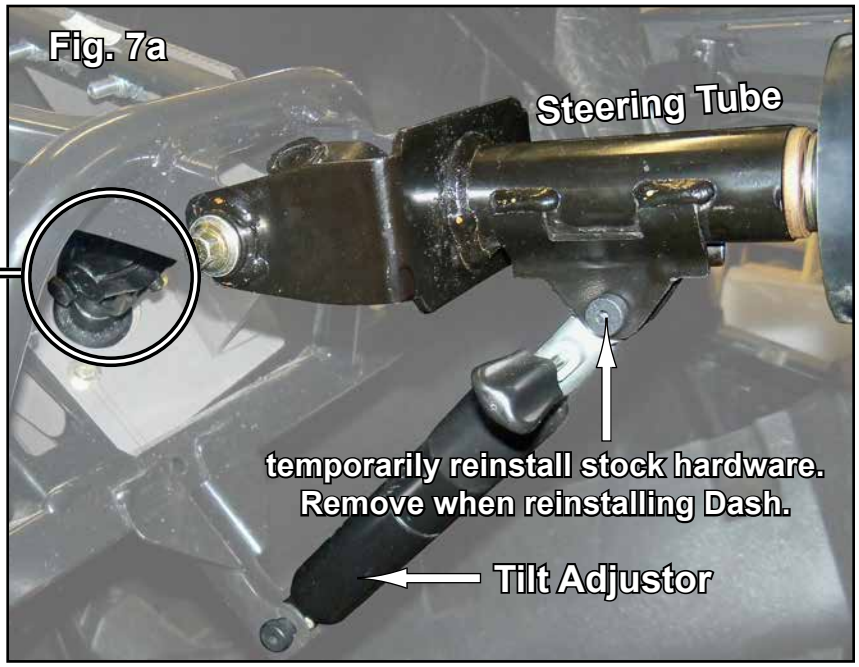
Fig. 7a
Steering Tube
temporarily reinstall stock hardware.
Remove when reinstalling Dash.
Tilt Adjustor

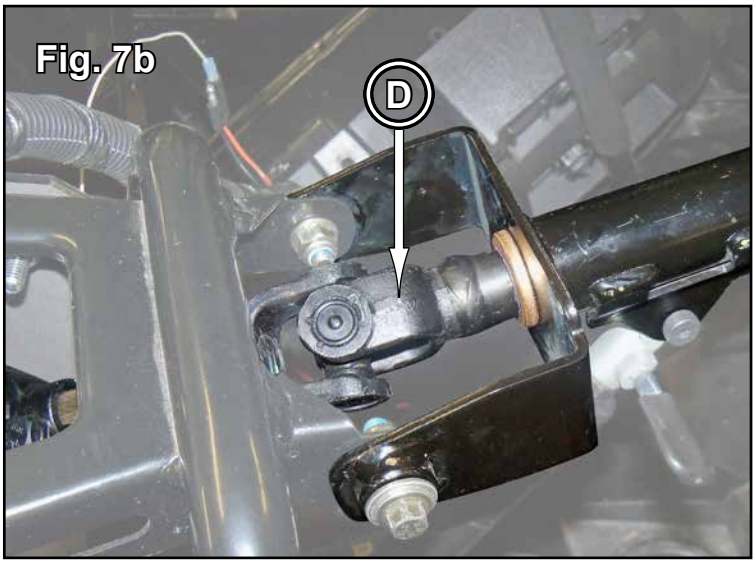
Fig. 7b
D

Wiring Details

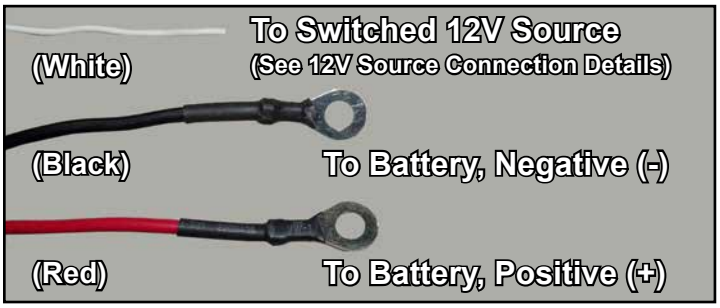

Secure in a visible location.



When activated, Diagnostic Light will flash once for about (1) second before turning off indicating proper function. Should different patterns occur, contact SuperATV.

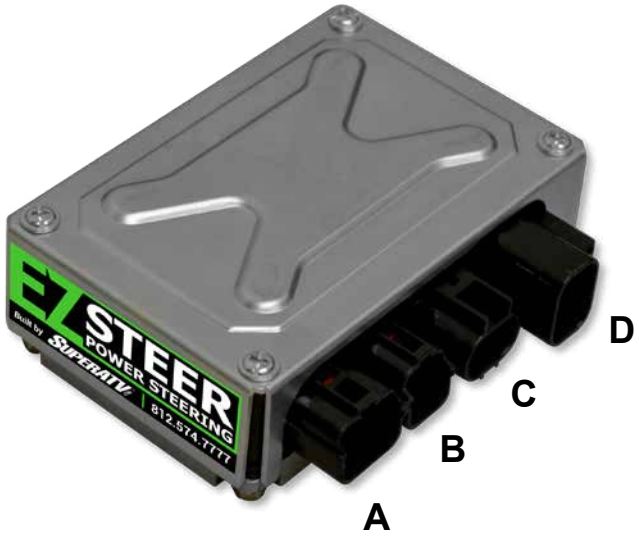

Plug	Function	Plug	Function
A	Torque Sensor	C	Power
B	Switched 12V Source	D	Motor

Switched 12V Source Connection

Connect White Wire from Wire Harness (N).

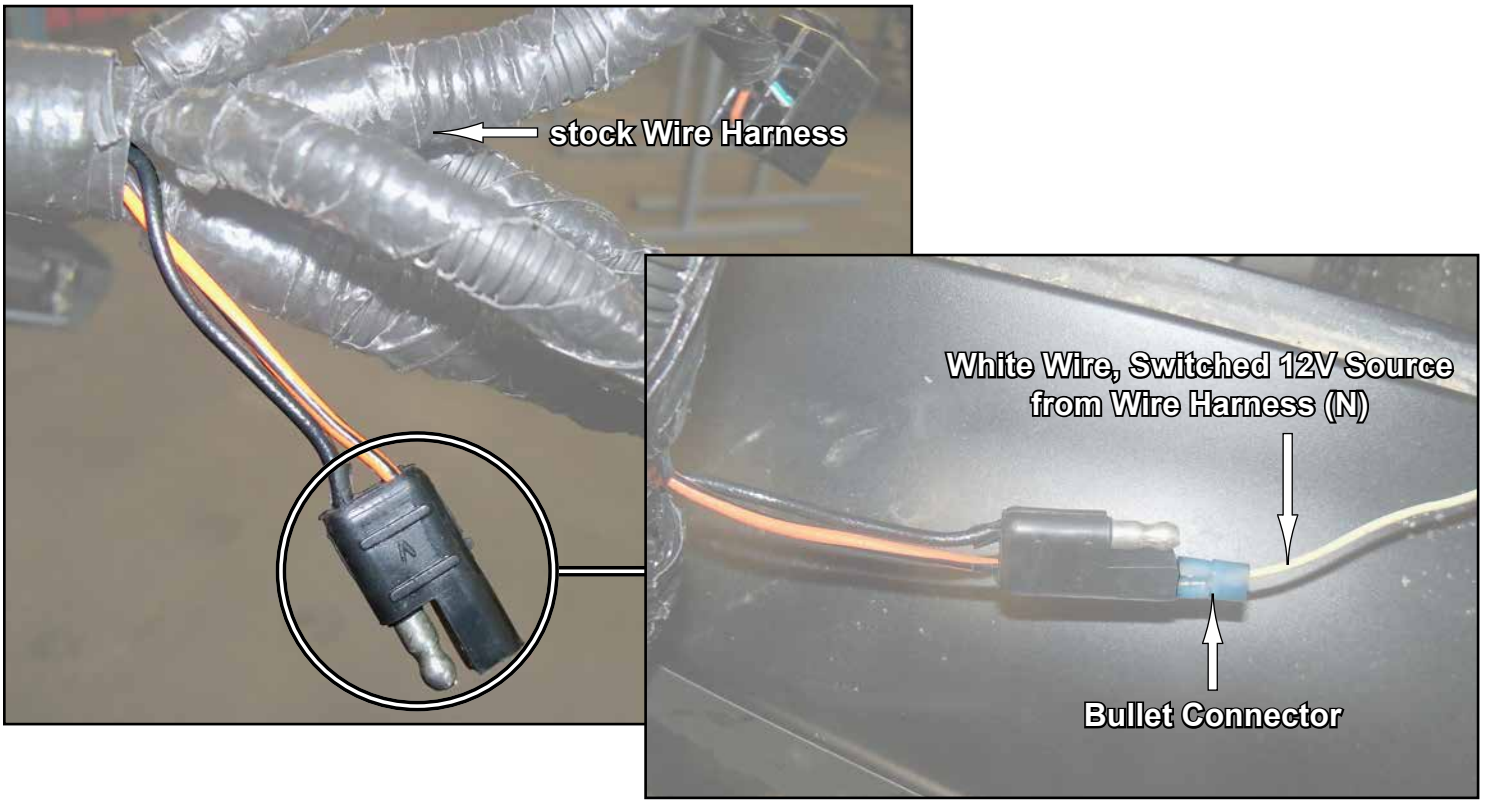

Power Connections

Route Black and Red Wires from Wire Harness (N) to Battery (located under Passenger Seat) and make connections. NOTE: Ensure that Wires are routed away from moving parts; secure wires accordingly.





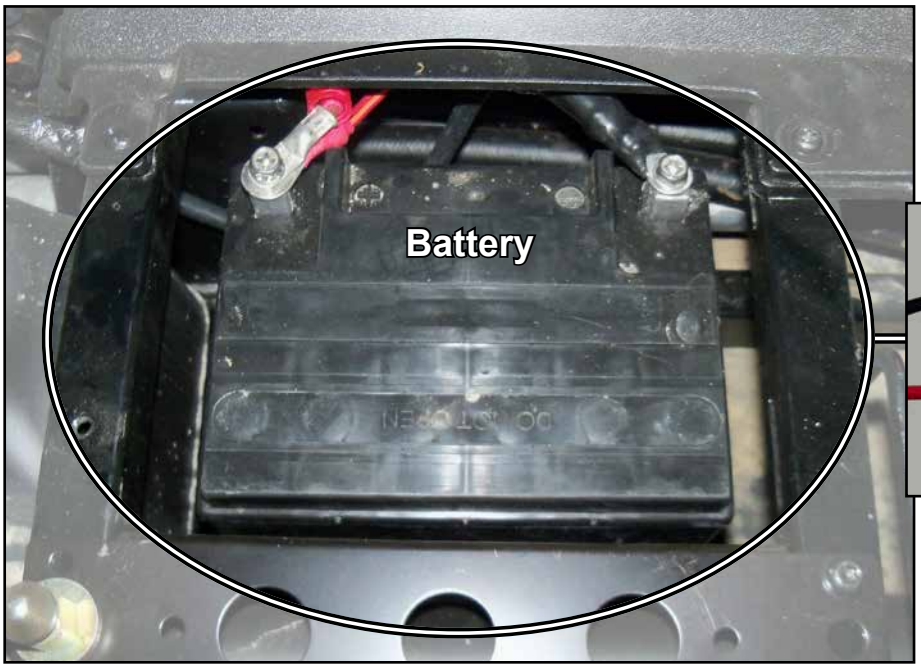

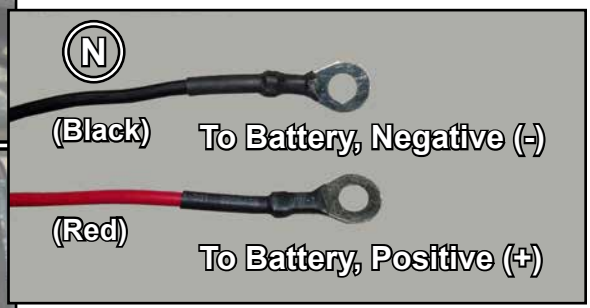

Liability Statement

SuperATV's® products are designed to best fit user's ATV/UTV under stock conditions. Adding, modifying, or fabricating any factory or aftermarket parts will void any warranty provided by SuperATV® and is not recommended. SuperATV's® products could interfere with other aftermarket accessories. If user has aftermarket products on machine, contact SuperATV® to verify that they will work together.

Although SuperATV® has thousands of satisfied customers, user should be aware that installing lift kits, long travel, or suspension kits, tires, etc. will change the ride of machine and may increase maintenance and part wear. Operating any off-road machine while, or after, consuming alcohol and/or drugs increases risk of bodily harm or death. No warranty or representation is made as to this product's ability to protect user from severe injury or death. SuperATV® urges operators and occupants to wear a helmet and appropriate riding gear at all times.

By purchasing and installing SuperATV® products, user agrees that should damages occur, SuperATV® will not be held responsible for loss of time, use, labor fees, replacement parts, or freight charges. SuperATV®, nor any 3rd party, will not be held responsible for any direct, indirect, incidental, special, or consequential damages that result from any product purchased from SuperATV®. The total liability of seller to user for all damages, losses, and causes of action, if any, shall not exceed the total purchase price paid for the product that gave rise to the claim.

SuperATV® will warranty only parts provided by SuperATV®. Any damage or problems with OEM housings, bearings, seals, or other manufacturers' products will not be covered by SuperATV®. SuperATV® parts and products are not warrantied if item was not installed properly, misused, or modified.

Installing, adding, modifying, or fabricating any factory or aftermarket product to your ATV/UTV may violate certain local, state, and federal laws. Be advised that laws vary depending on town, city, county, state, etc. Use of certain products on public streets, roads, or highways may be in violation law. The Buyer is solely and exclusively legally and personally responsible for any violation of the law by the installation or use of the product. You must abide by all local, state, and federal laws, including but not limited to vehicle safety, traffic laws, and ordinances. It is your responsibility to know the laws and how they apply to you.

The Buyer is responsible to fully understand the capability and limitations of his/her vehicle according to manufacturer specifications, warnings and instructions and agrees to hold SuperATV® harmless from any damage resulting from failure to adhere to such specifications, warnings and/ or instructions. The Buyer is also responsible to obey all applicable federal, state, and local laws and ordinances when operating his/her vehicle while using this product, and the Buyer agrees to hold SuperATV® harmless from any violation thereof.