2753 Michigan Road • Madison, Indiana 47250 • 855-743-3427

INSTALLATION INSTRUCTIONS

Power Steering Kit (400W)
for Can-Am Maverick

Item	Description
A	Motor Mount
B	Mounting Bracket Support
C	ECU Mount

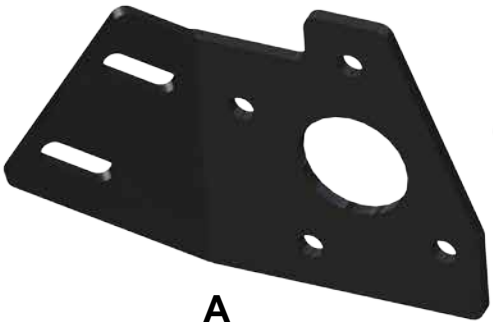

A

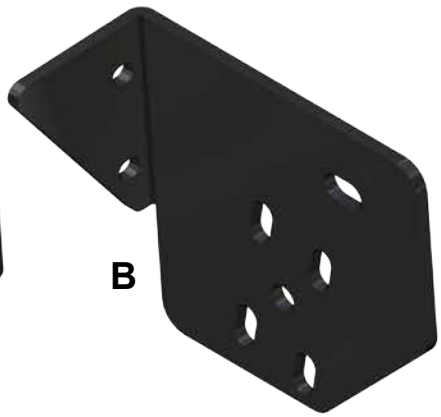

B

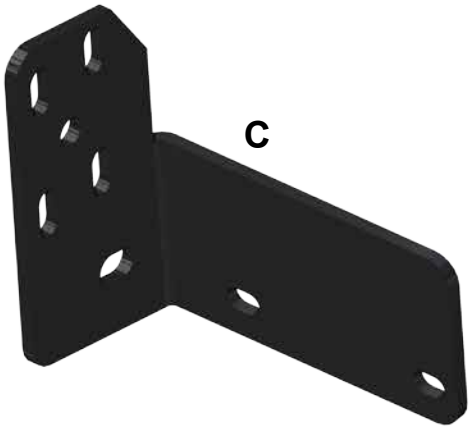

C

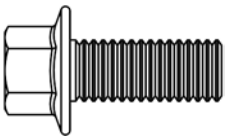

2x **M8 x 20mm Lg. FHCS**

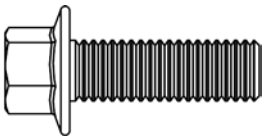

2x **M8 x 25mm Lg. FHCS**

(extra hardware may be present after installation; discard)

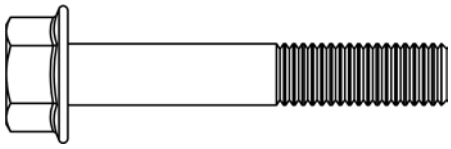

4x **M8 x 50mm Lg. FHCS**



6x **M8 Nylock Nut**

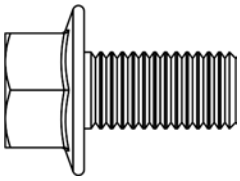

4x **M10 x 20mm Lg. FHCS**

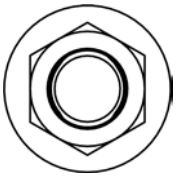

1x **M10 Nylock Nut**

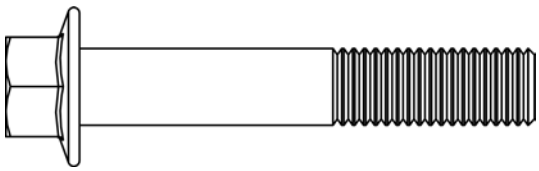

1x **M10 x 60mm Lg. FHCS**

(Kit contents continue on following page)

Need help with your installation?

sales@superatv.com

www.superatv.com

1-855-743-3427

8:00am - 8:00pm EST M-Th
8:00am - 7:00pm EST Friday
9:00am - 2:00pm EST Saturday

Read instructions and view illustrations before beginning.

Thank You For Choosing

© 2016 SuperATV.com®. All Rights Reserved.

Rev IN-PS-7-32-400 7/12/2021

(Kit contents continued)

Item	Description
E	Lower Shaft
F	Upper Shaft
G	Motor
H	ECU
J	Wire Harness

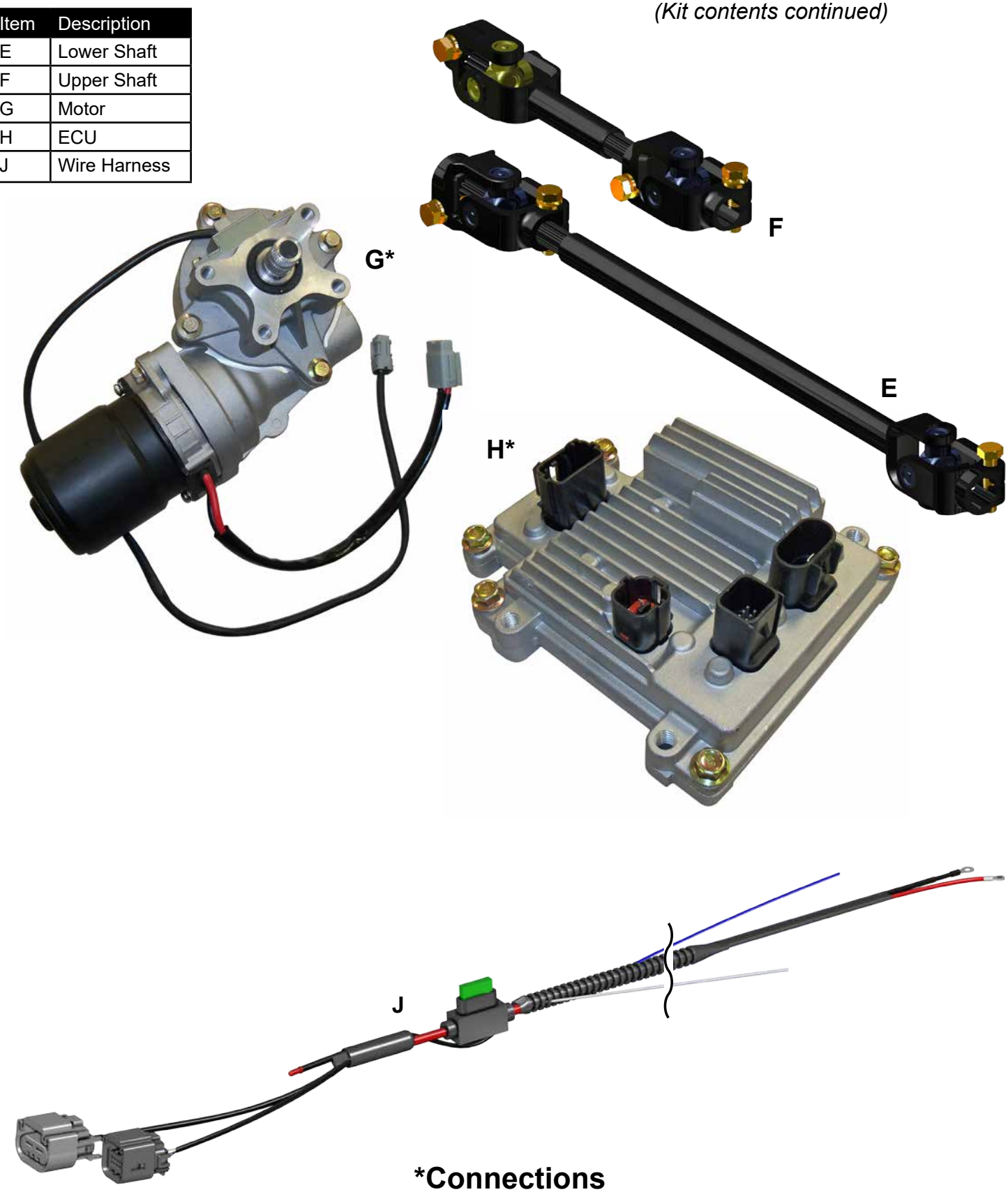

*Connections

- Before installing, ensure that all Gaskets in electrical connections are properly seated.
- If Gaskets are not seated use a Flathead Screwdriver to seat.

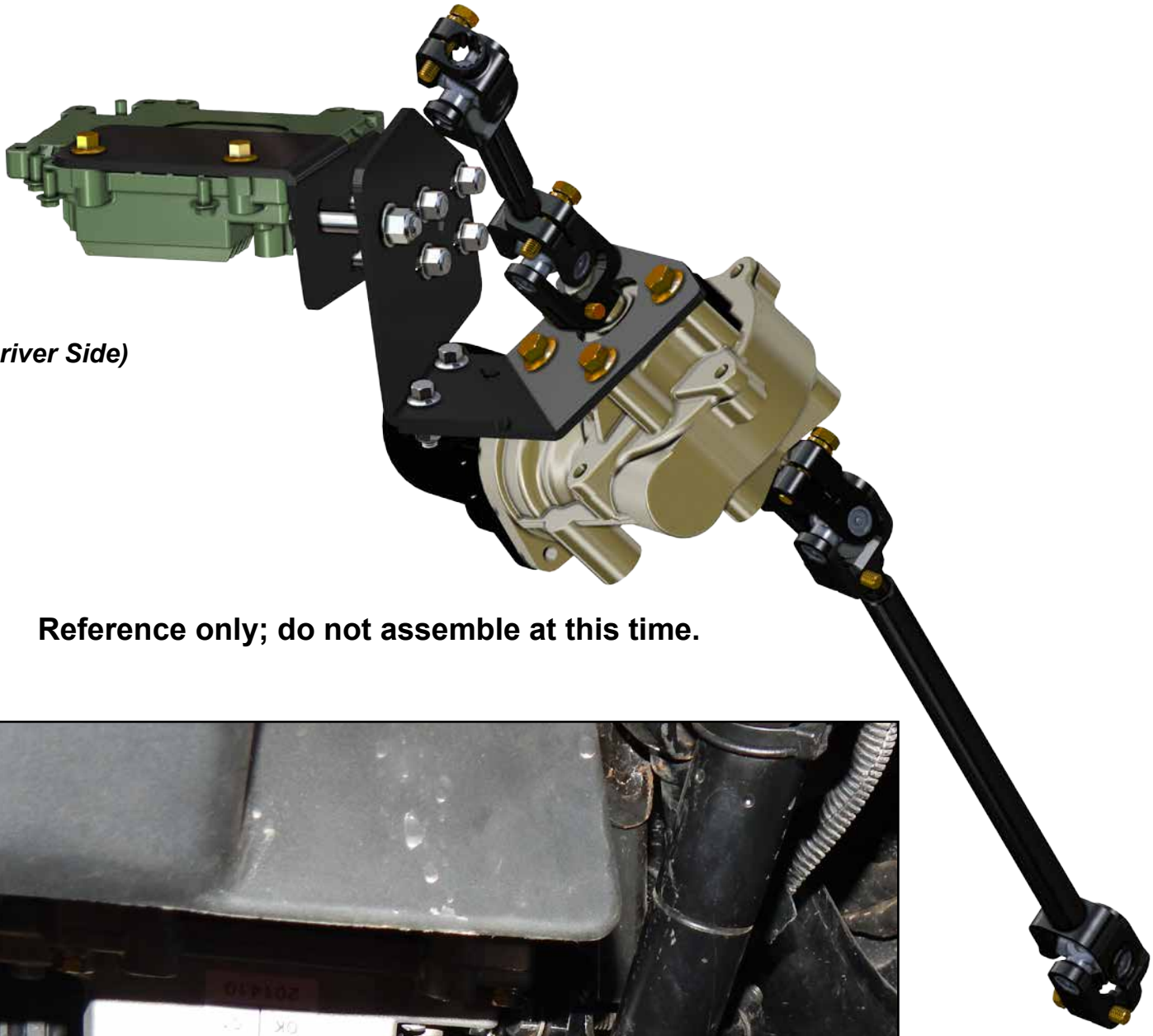

(Driver Side)

Reference only; do not assemble at this time.

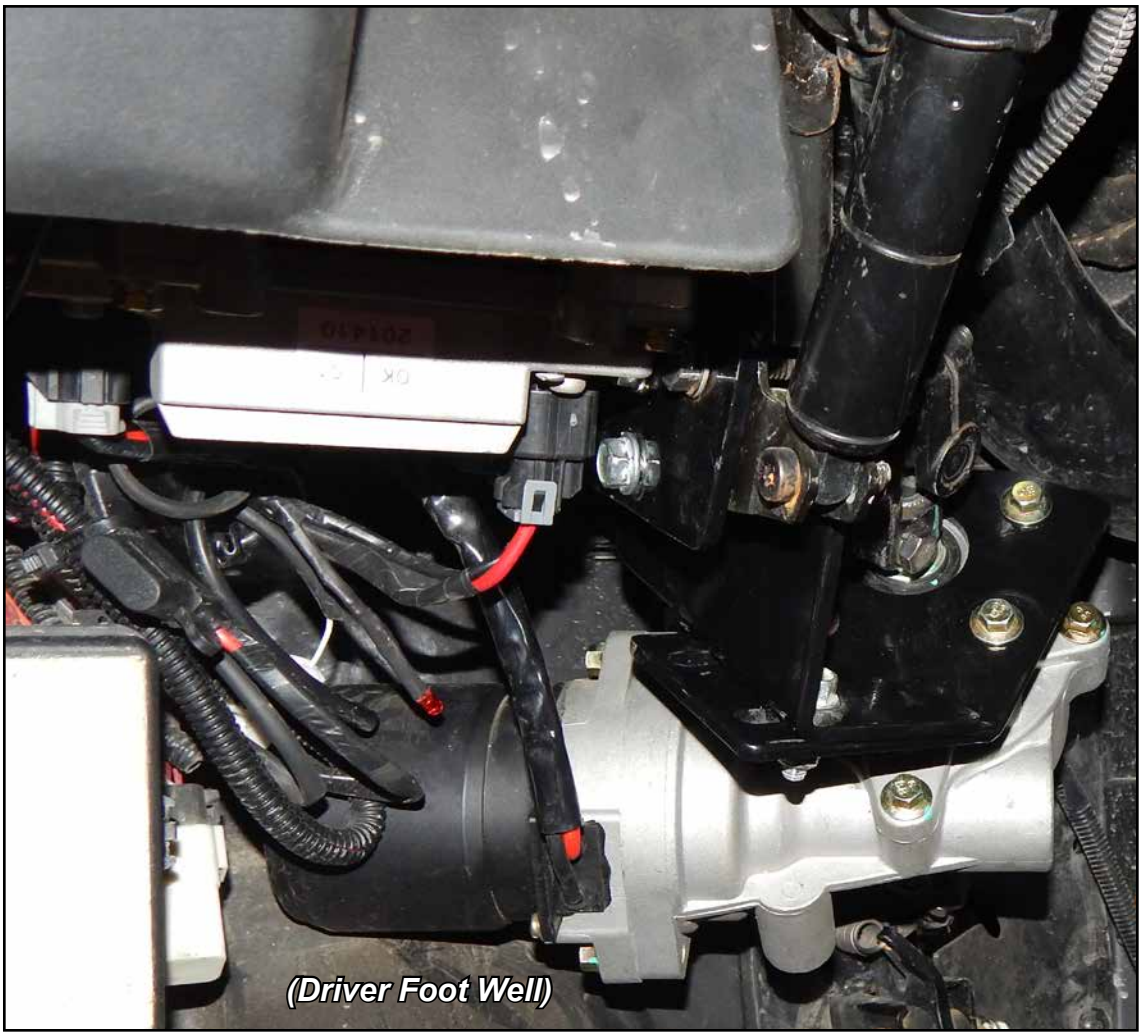

(Driver Foot Well)

Removal: *Keep all components removed from machine.*

- Remove Inner Fender Panels. See Fig. 1.
- Loosen Bolt securing stock Steering Shaft to Rack and Pinion. See Fig. 1a.
- Remove U-Joint from Steering Stem. See Figs. 2 - 2a.
- Remove stock Steering Shaft from Rack and Pinion; Pull Lower Shaft through Firewall.

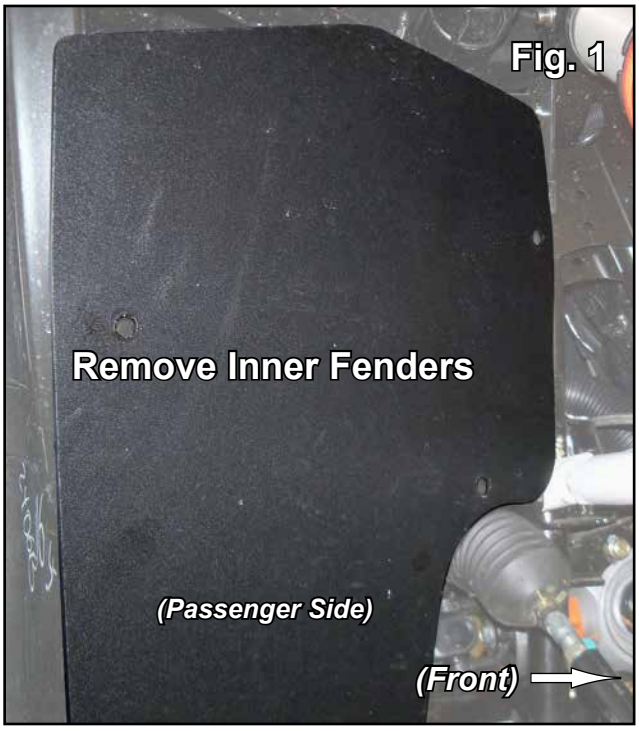

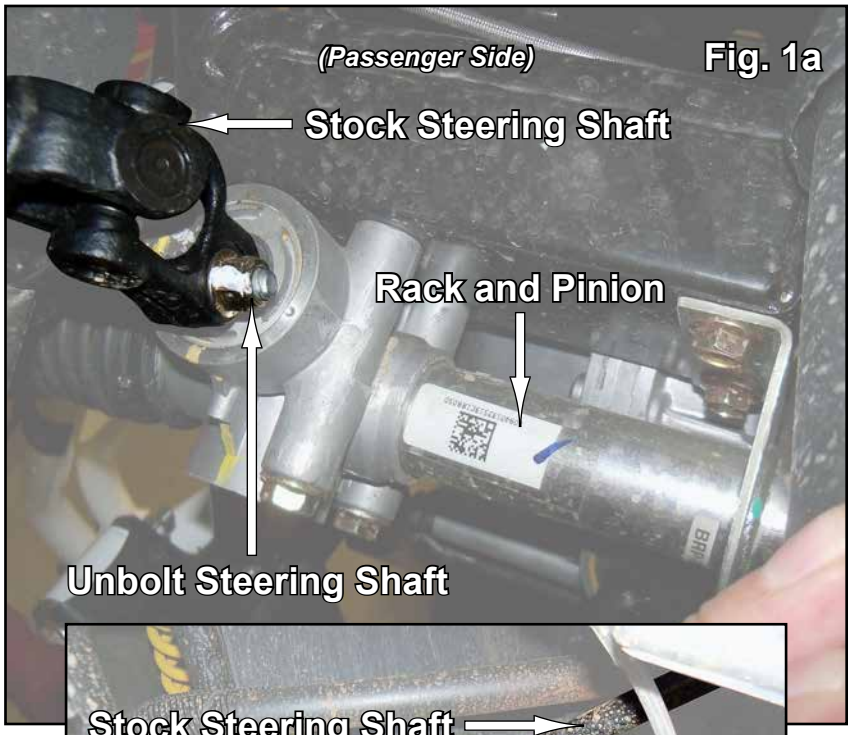



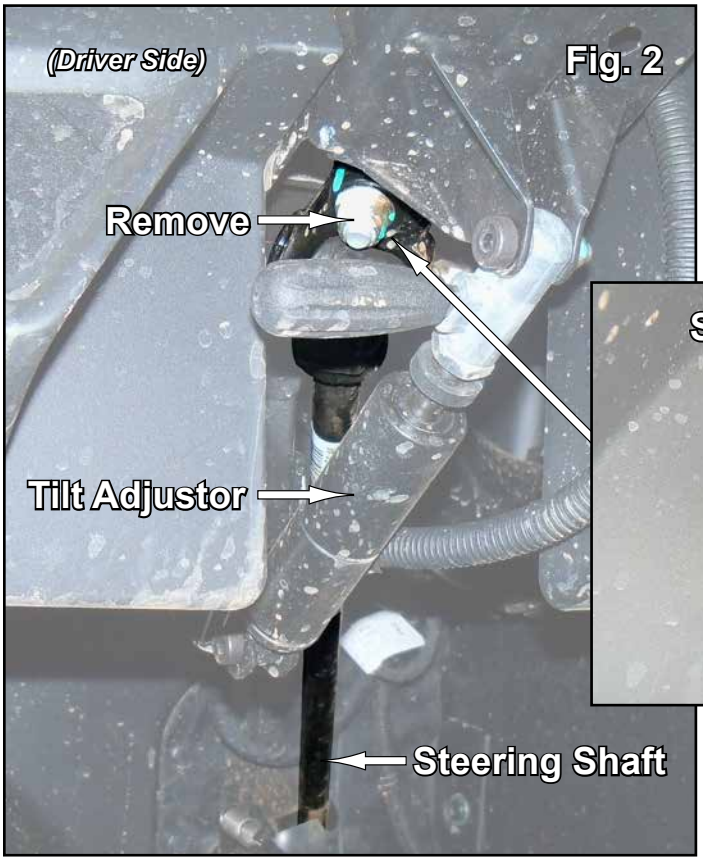



- Insert Lower Shaft (E) through Firewall and secure to Rack and Pinion with supplied hardware.

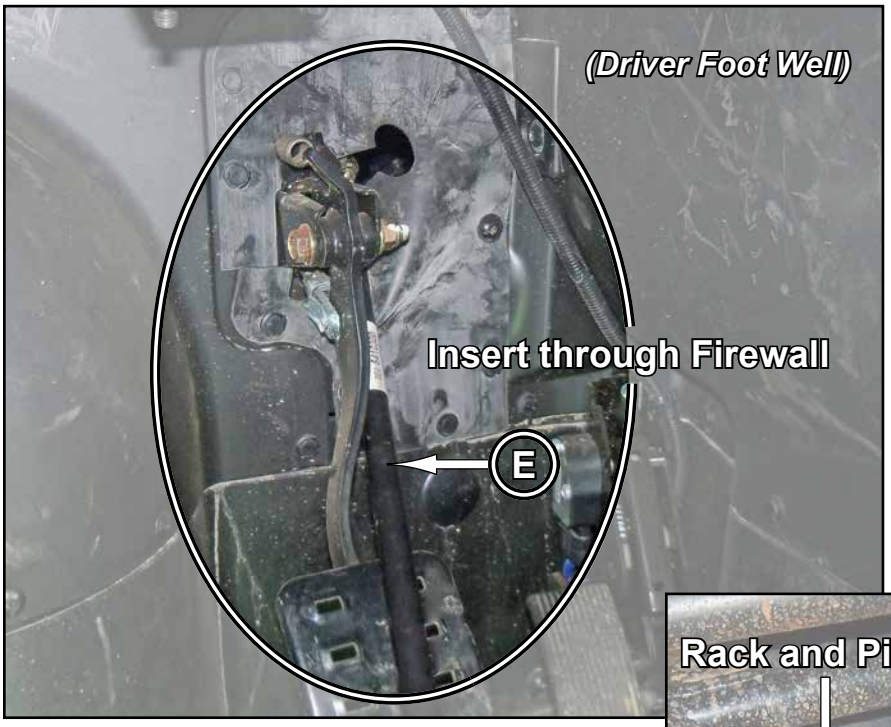

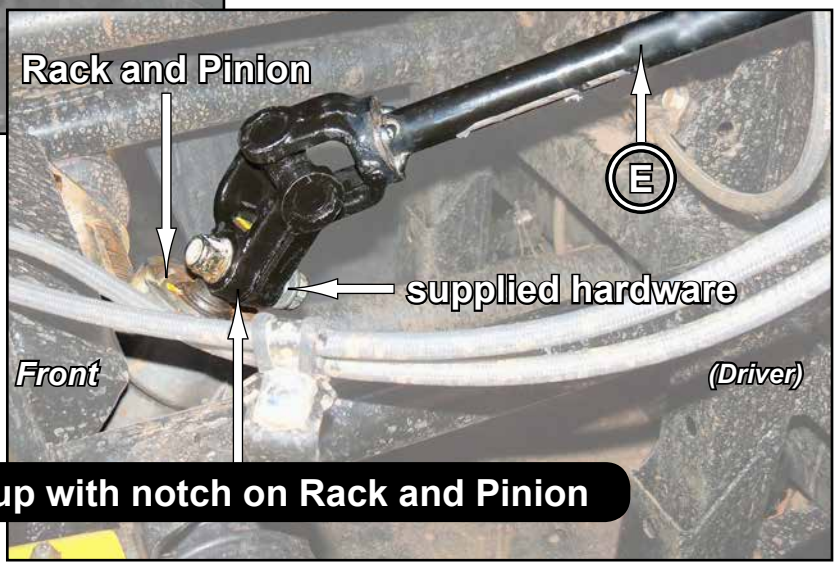

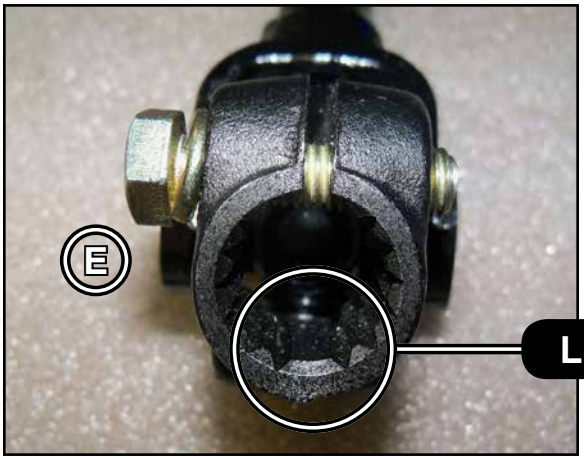

- Install Motor (G) to Lower Shaft (E) with provided hardware.
- Install Motor Mount (A) to Motor (G) with hardware shown.

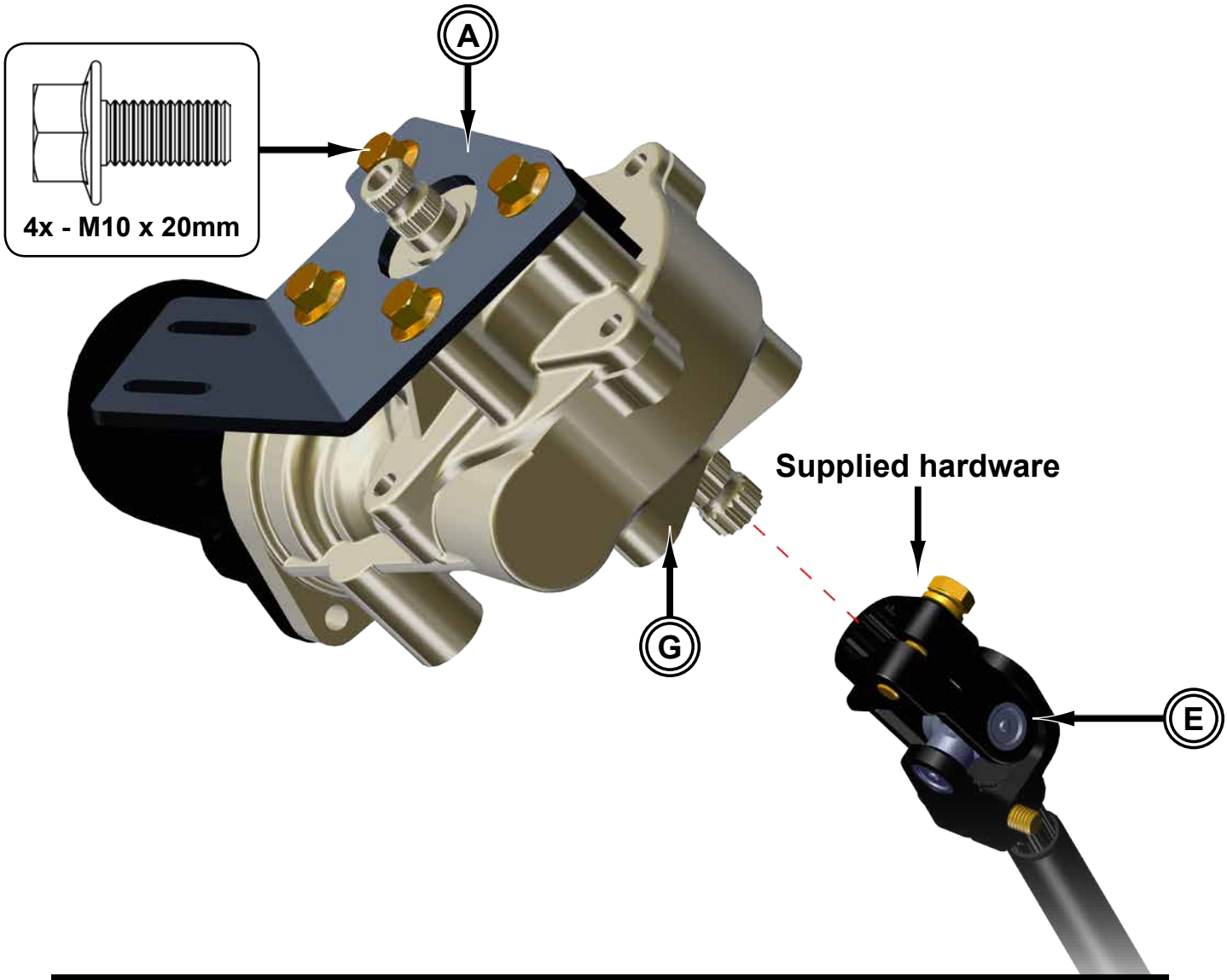

Motor Shafts Detail





- Install Mounting Bracket Support (B) and ECU Mount (C) to Steering Frame with hardware shown.

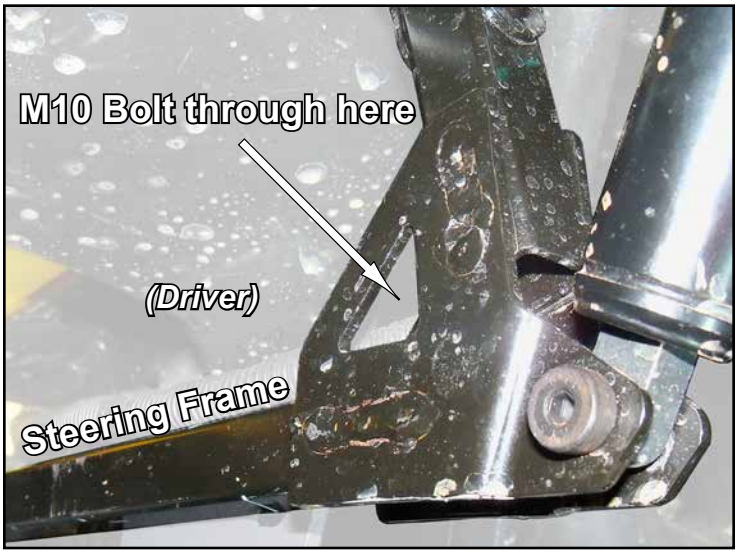

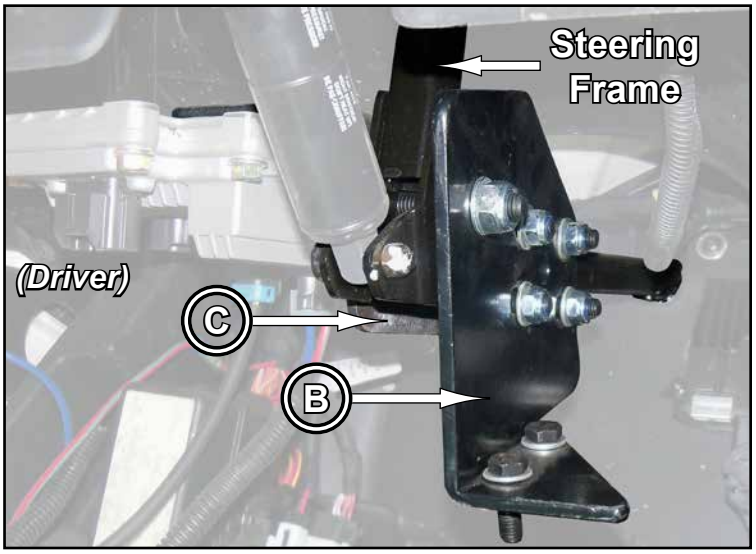

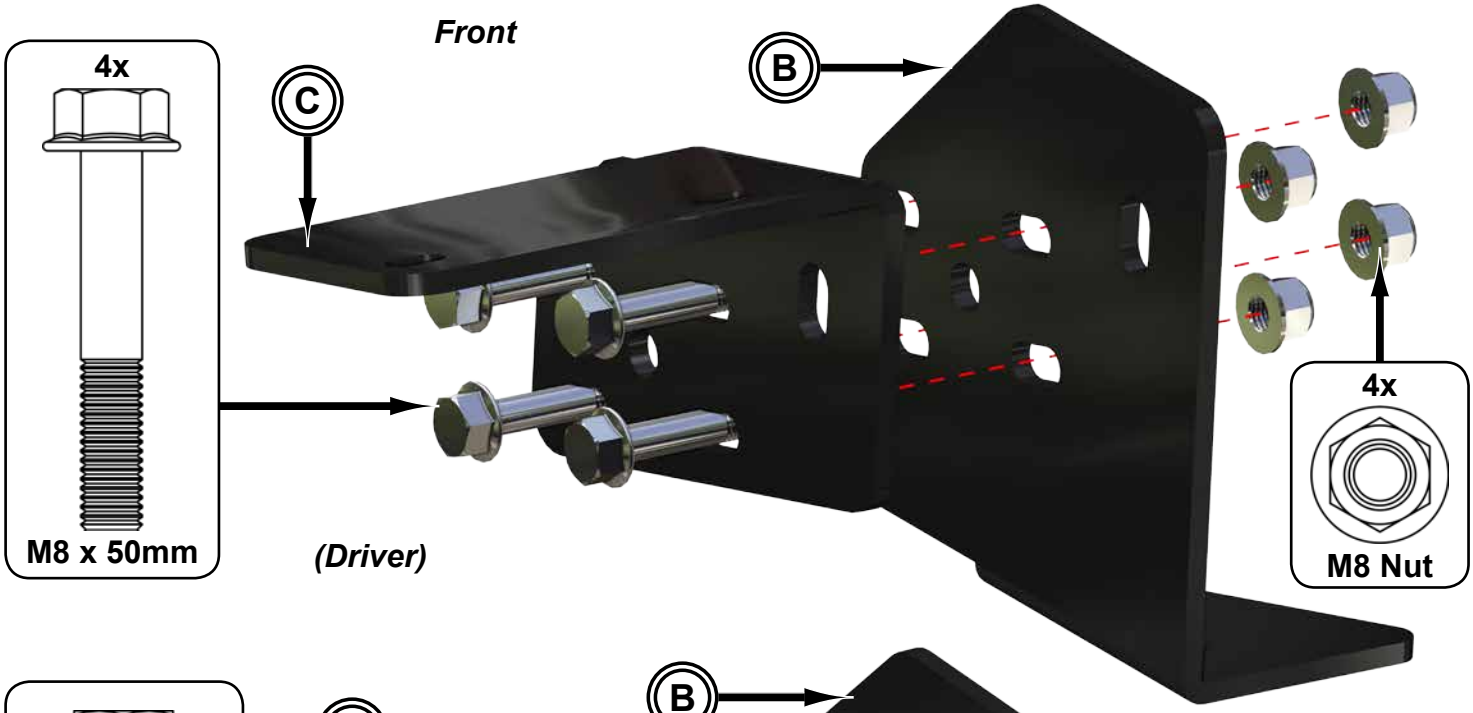

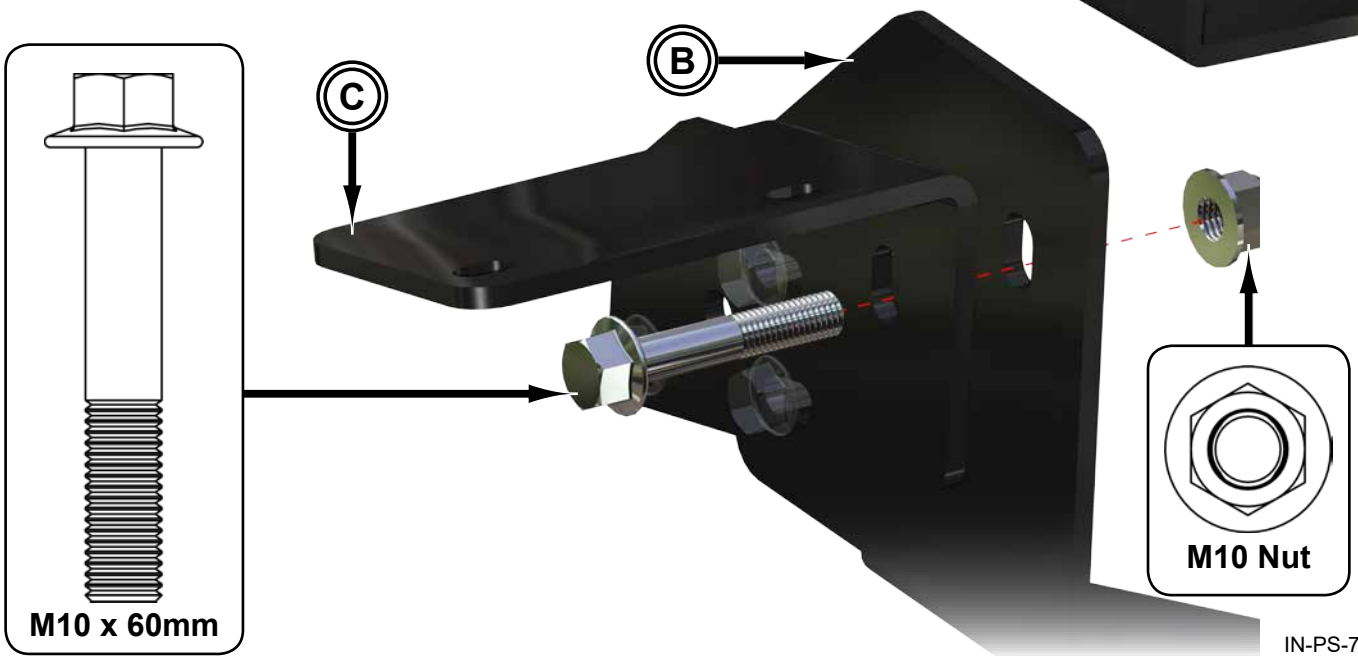

- Install ECU (H) to ECU Mount (C) with hardware shown. Do not wire.

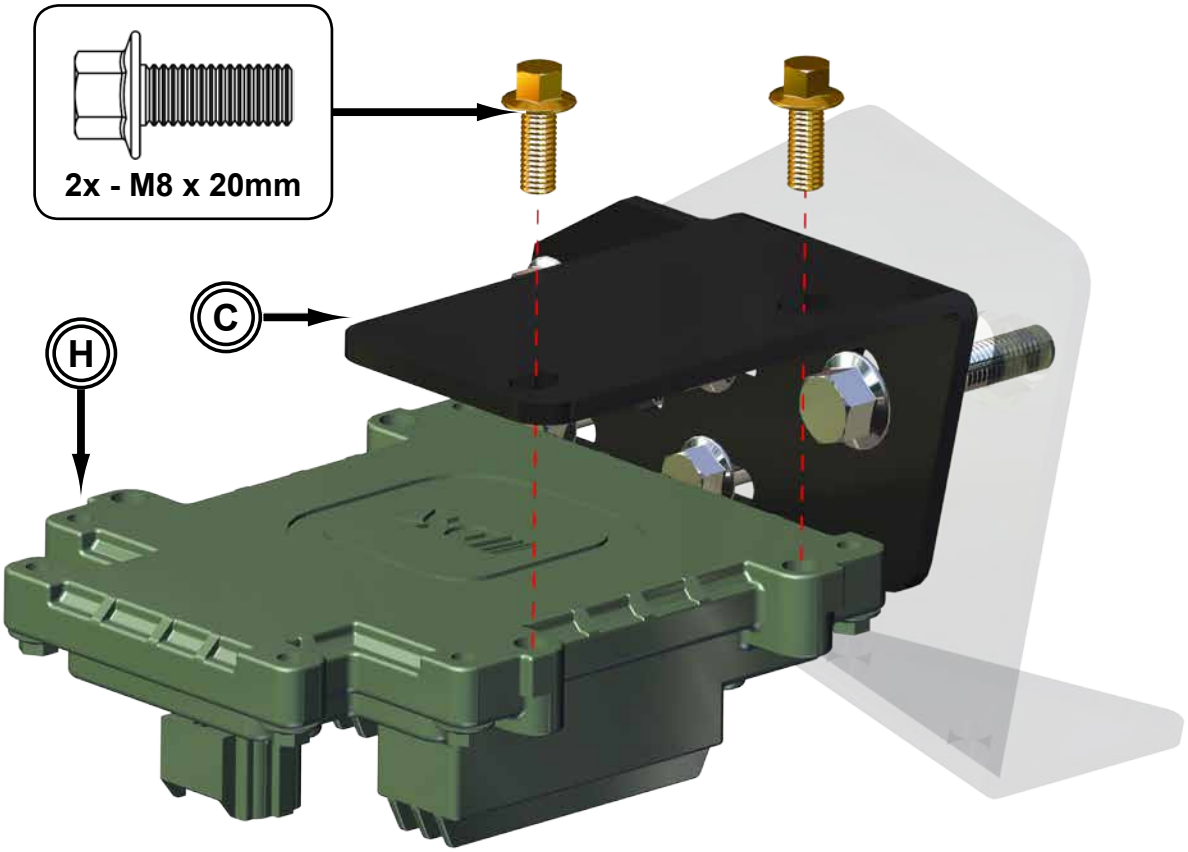

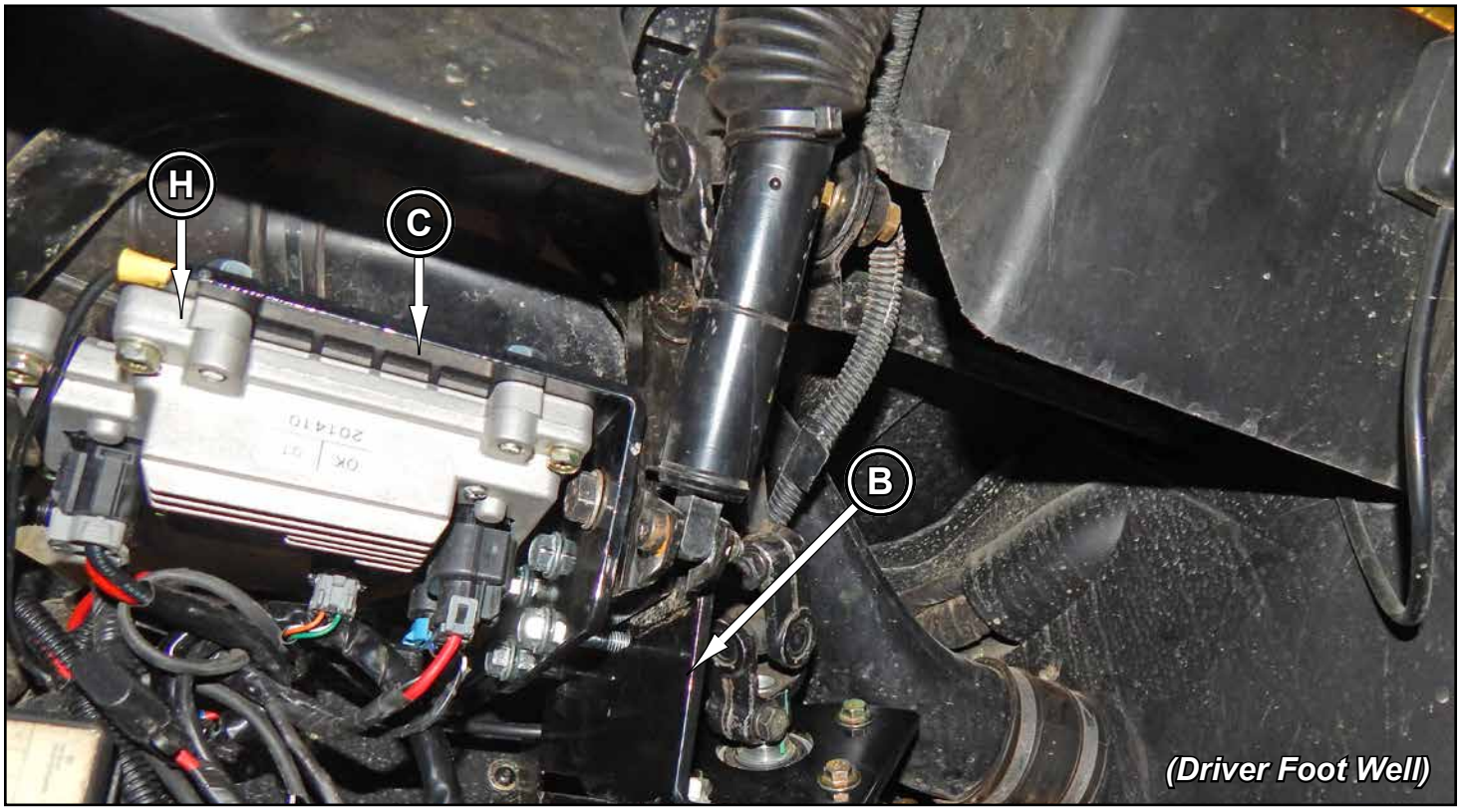

- Install Upper Shaft (F) to stock Steering Stem with supplied hardware.

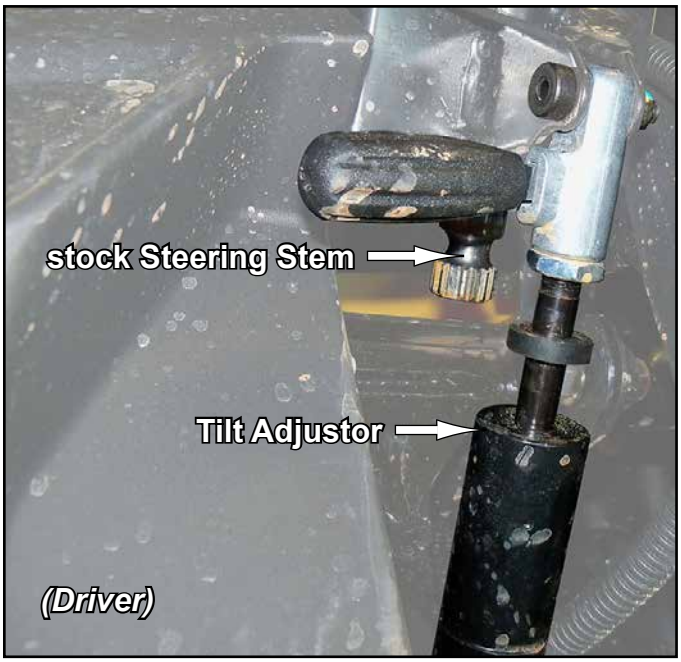



- Join Motor Mount (A) and Mounting Bracket Support (B) with hardware shown.
- Install Upper Shaft (F) to Motor (G) with supplied hardware.

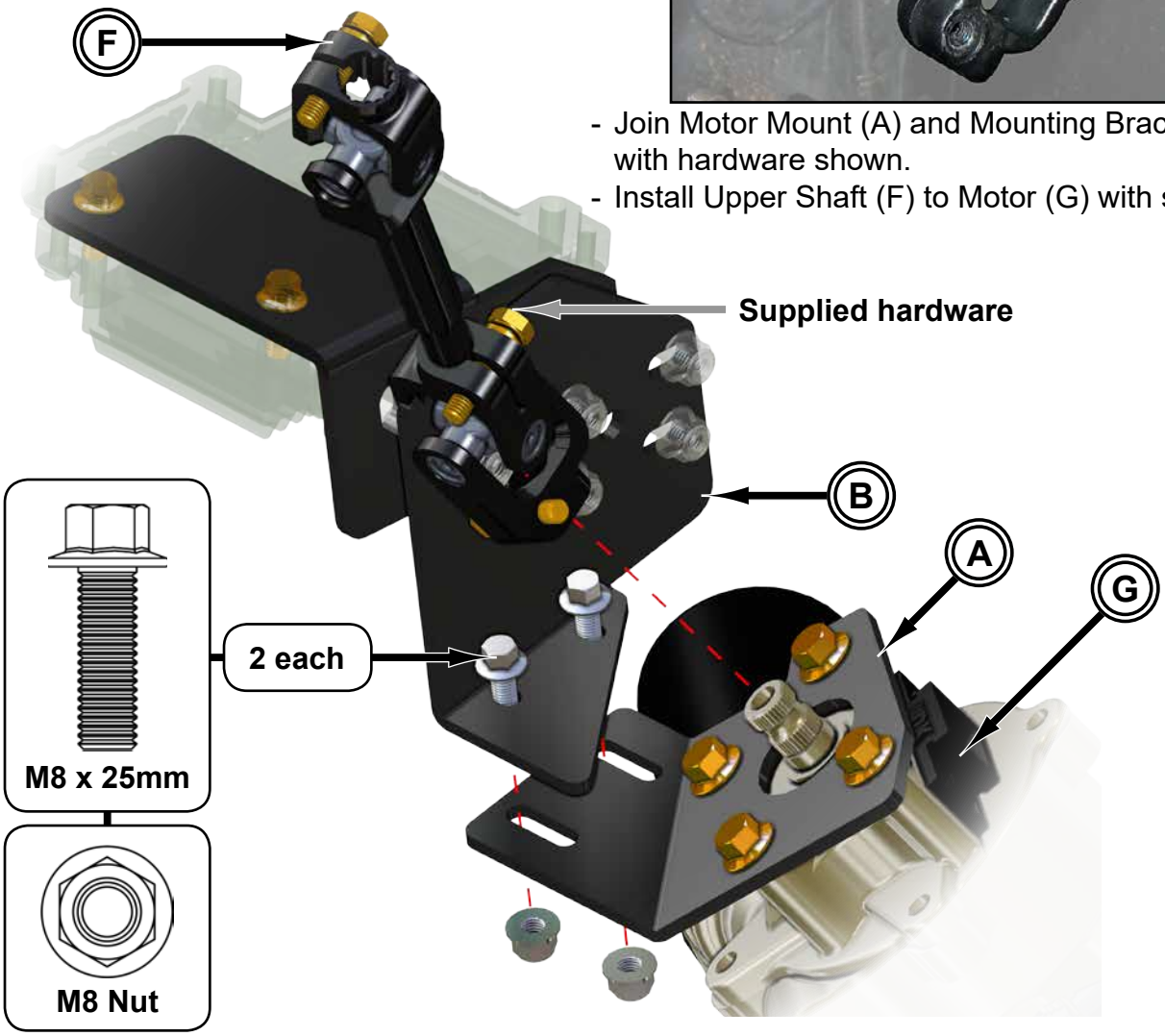

- Plug in Wire Harness (J) and make connections. See “Wiring Details”, page 11.

- Tighten all hardware completely.
- Ensure no components are binding, rubbing, or causing interference after tightening hardware.

Adjustments



Upper Shaft (F) and Steering Shaft Adjustment:

To ensure no interference can occur with Tilt Adjustor, stock Steering Stem and Upper Shaft (F) to be flush as shown.

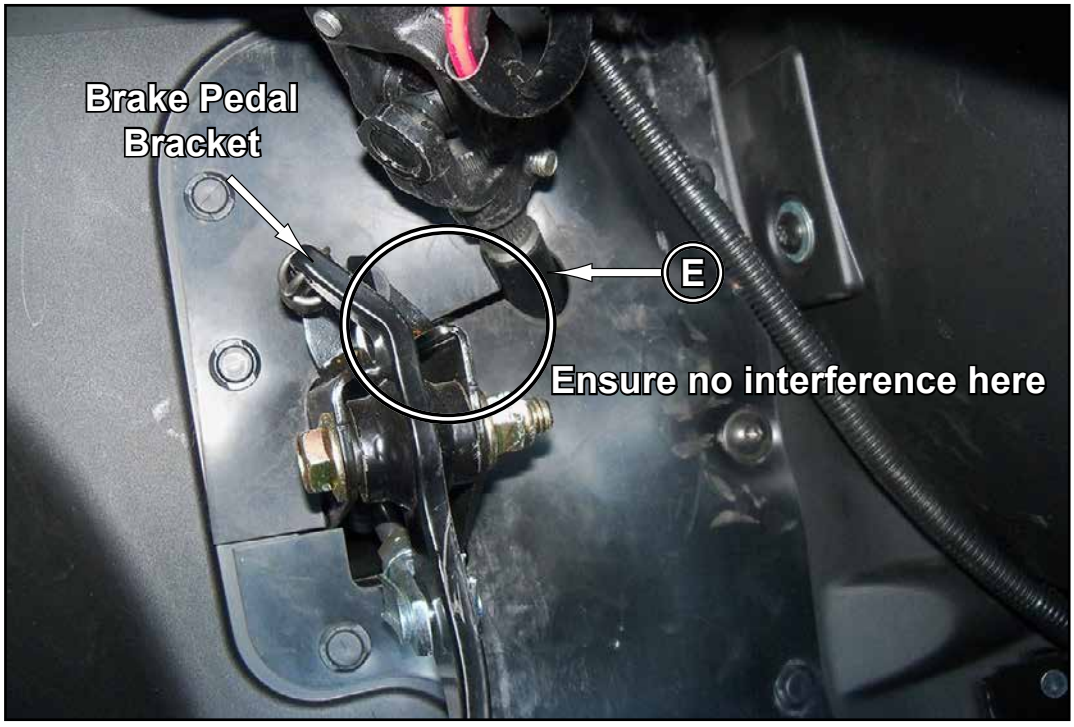

Lower Shaft (E) Adjustment:

Adjust components so that no interference with Brake Pedal Bracket and Lower Shaft (E) occur.

Wiring Details

BLUE WIRE IS NOT USED. SEAL END OF BLUE WIRE AND SECURE OUT OF WAY.

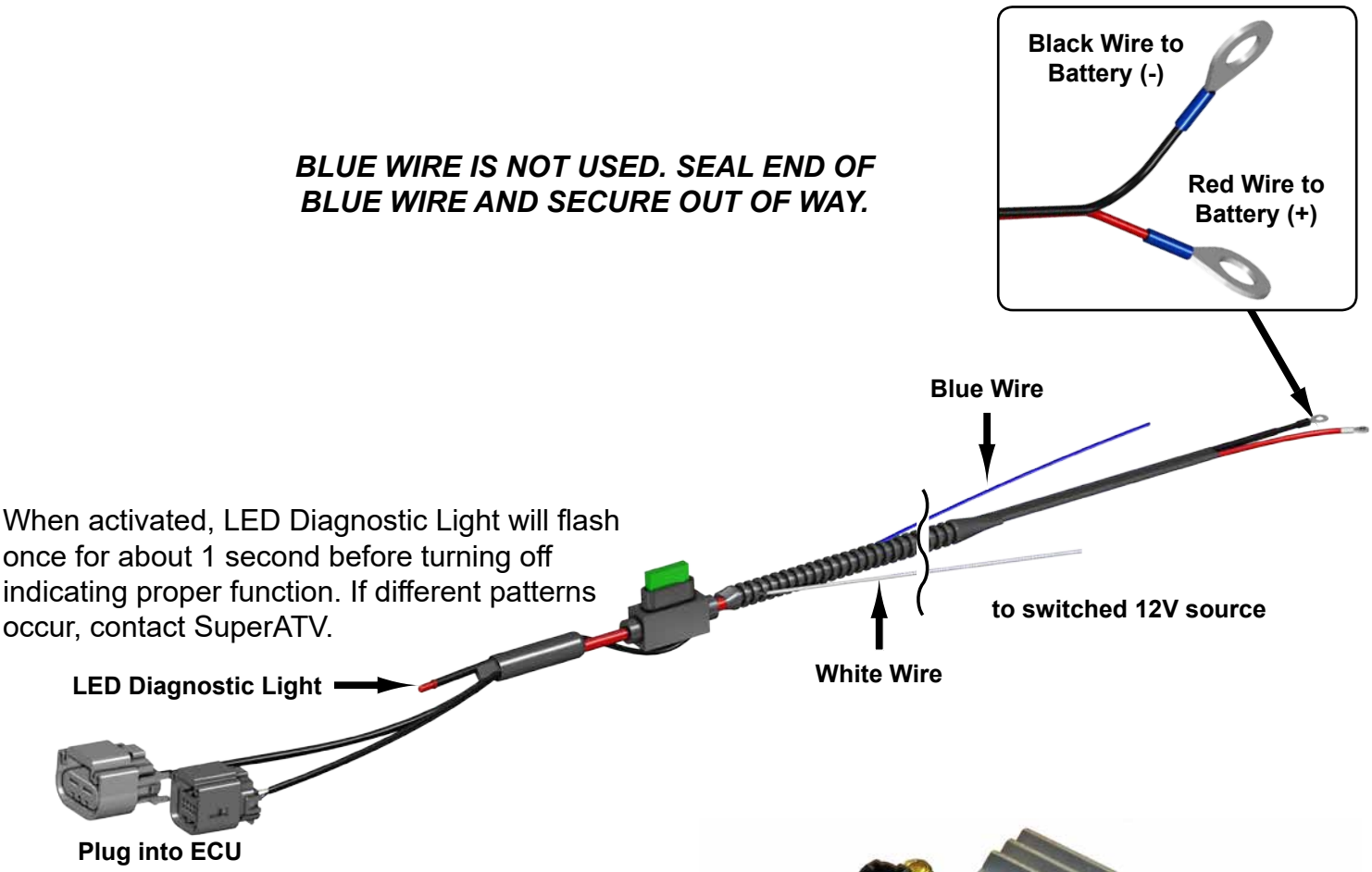

When activated, LED Diagnostic Light will flash once for about 1 second before turning off indicating proper function. If different patterns occur, contact SuperATV.

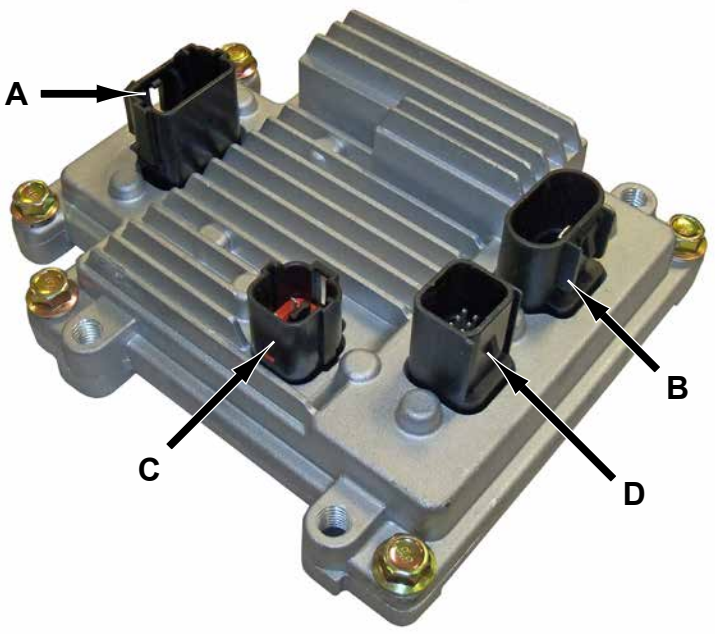

ECU Functions

Plug	Function
A	Motor
B	Main Power and Ground
C	No Contact Sensor
D	Key-On Power, Speed Sensor Wire, and LED

Switched 12V wiring



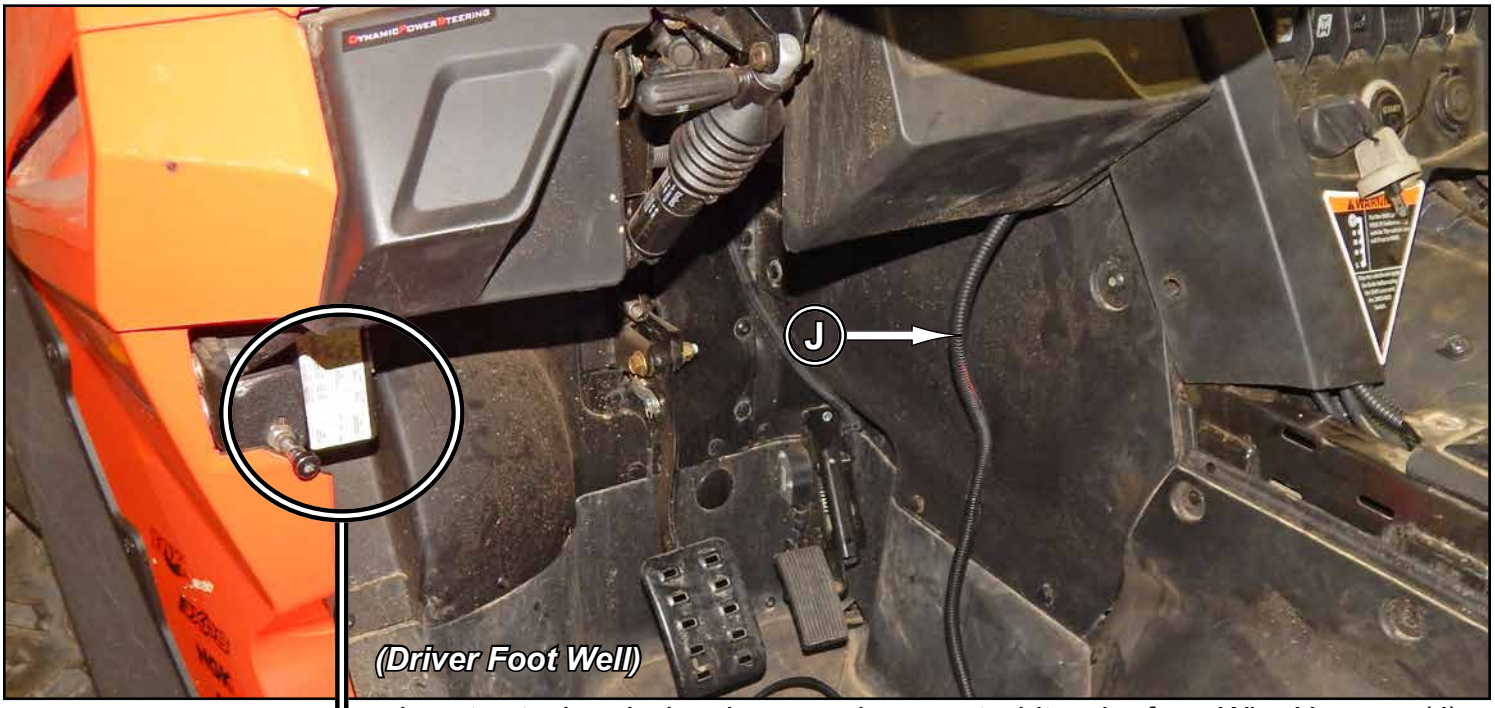

- Locate stock red wire shown and connect white wire from Wire Harness (J).
- Use provided connector.

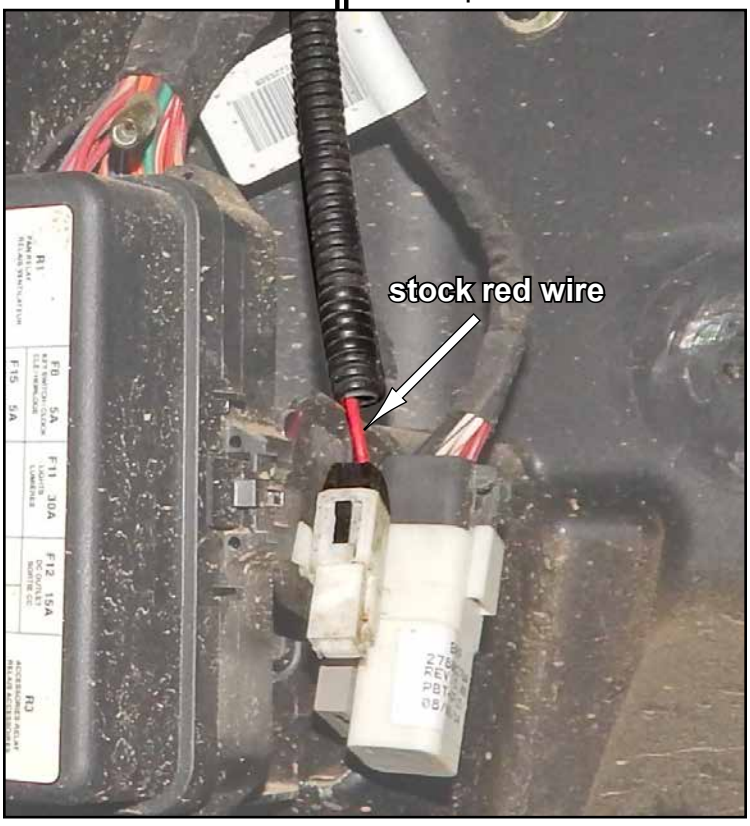

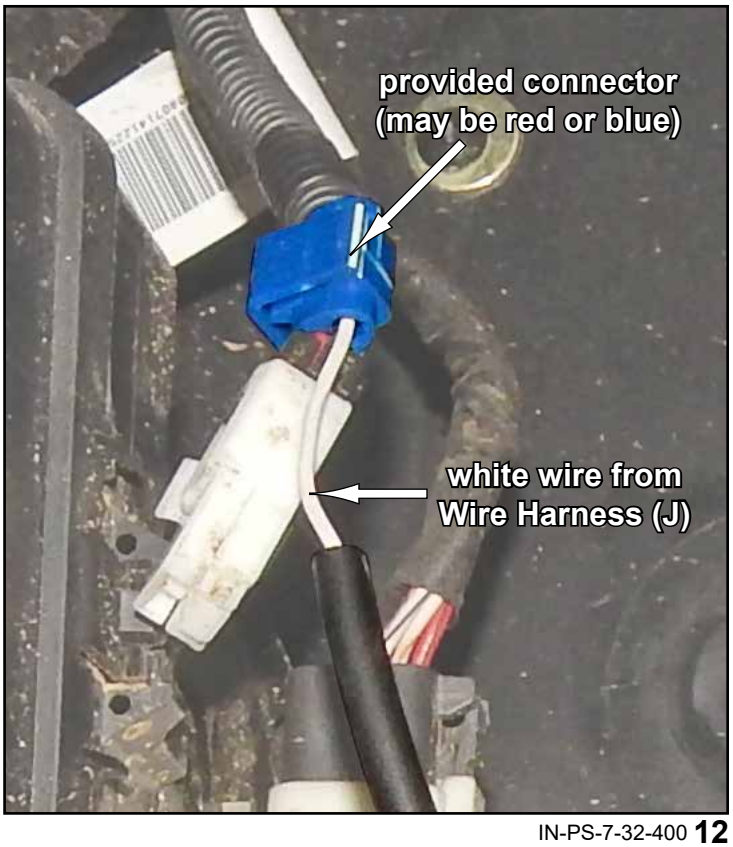

Power wiring

- Remove driver side Seat and Cover.



- Route black and red wires in Wire Harness (J) through to Battery located in rear of machine.



Power wiring continued

- Connect wires to Battery; red to red, black to black.

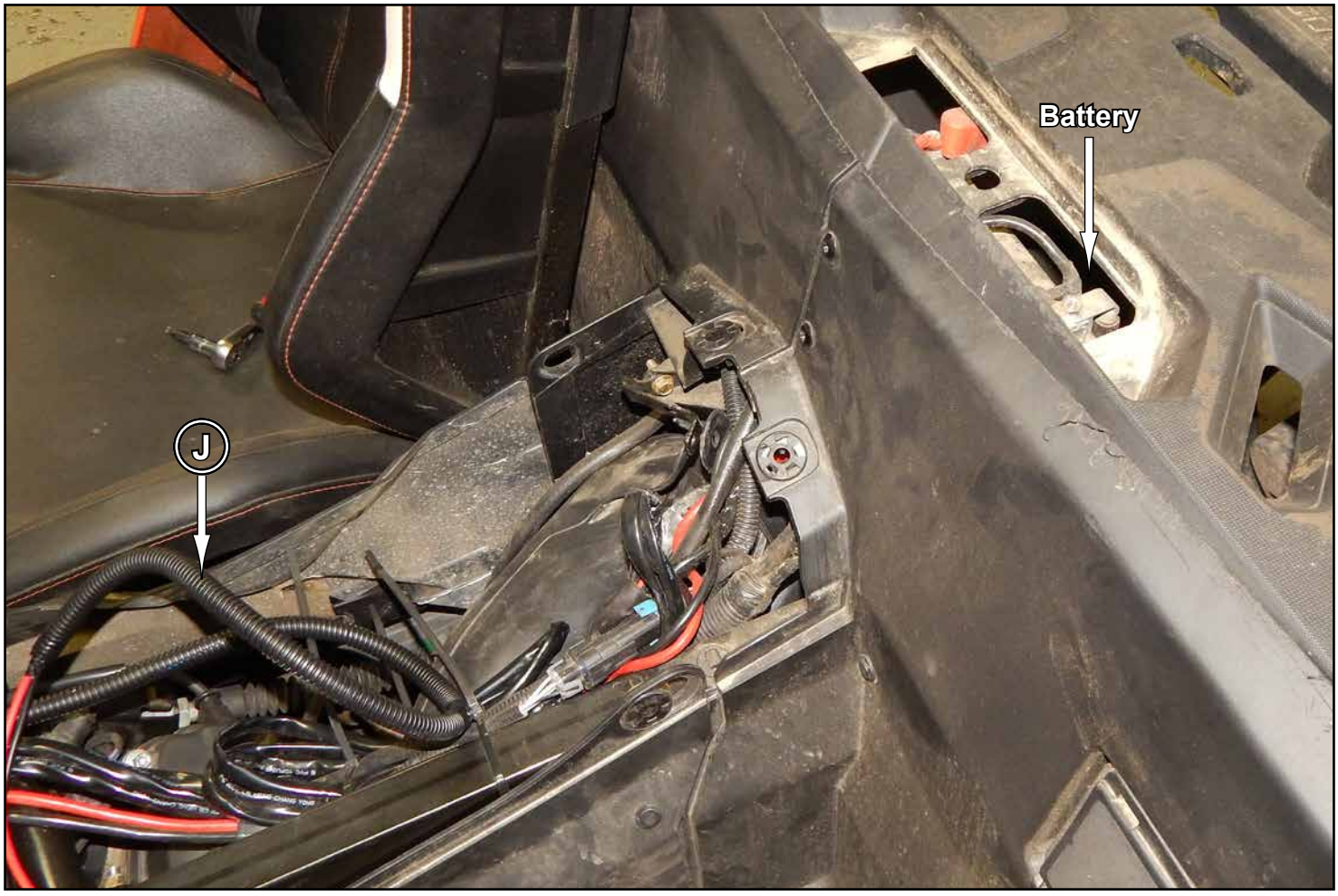

- Replace Cover and Seat.

Liability Statement

SuperATV's® products are designed to best fit user's ATV/UTV under stock conditions. Adding, modifying, or fabricating any factory or aftermarket parts will void any warranty provided by SuperATV® and is not recommended. SuperATV's® products could interfere with other aftermarket accessories. If user has aftermarket products on machine, contact SuperATV® to verify that they will work together.

Although SuperATV® has thousands of satisfied customers, user should be aware that installing lift kits, long travel, or suspension kits, tires, etc. will change the ride of machine and may increase maintenance and part wear. Operating any off-road machine while, or after, consuming alcohol and/or drugs increases risk of bodily harm or death. No warranty or representation is made as to this product's ability to protect user from severe injury or death. SuperATV® urges operators and occupants to wear a helmet and appropriate riding gear at all times.

By purchasing and installing SuperATV® products, user agrees that should damages occur, SuperATV® will not be held responsible for loss of time, use, labor fees, replacement parts, or freight charges. SuperATV®, nor any 3rd party, will not be held responsible for any direct, indirect, incidental, special, or consequential damages that result from any product purchased from SuperATV®. The total liability of seller to user for all damages, losses, and causes of action, if any, shall not exceed the total purchase price paid for the product that gave rise to the claim.

SuperATV® will warranty only parts provided by SuperATV®. Any damage or problems with OEM housings, bearings, seals, or other manufacturers' products will not be covered by SuperATV®. SuperATV® parts and products are not warrantied if item was not installed properly, misused, or modified.

Installing, adding, modifying, or fabricating any factory or aftermarket product to your ATV/UTV may violate certain local, state, and federal laws. Be advised that laws vary depending on town, city, county, state, etc. Use of certain products on public streets, roads, or highways may be in violation law. The Buyer is solely and exclusively legally and personally responsible for any violation of the law by the installation or use of the product. You must abide by all local, state, and federal laws, including but not limited to vehicle safety, traffic laws, and ordinances. It is your responsibility to know the laws and how they apply to you.

The Buyer is responsible to fully understand the capability and limitations of his/her vehicle according to manufacturer specifications, warnings and instructions and agrees to hold SuperATV® harmless from any damage resulting from failure to adhere to such specifications, warnings and/ or instructions. The Buyer is also responsible to obey all applicable federal, state, and local laws and ordinances when operating his/her vehicle while using this product, and the Buyer agrees to hold SuperATV® harmless from any violation thereof.