2753 Michigan Road • Madison, Indiana 47250 • 855-743-3427

INSTALLATION INSTRUCTIONS

Power Steering Kit

for John Deere Gator™ - 550 XUV/RSX 850i

Item	Description
H	Lower Shaft
J	Upper Shaft
F	Motor Bracket
L	Formed Mounting Bracket
N	Control Module Bracket

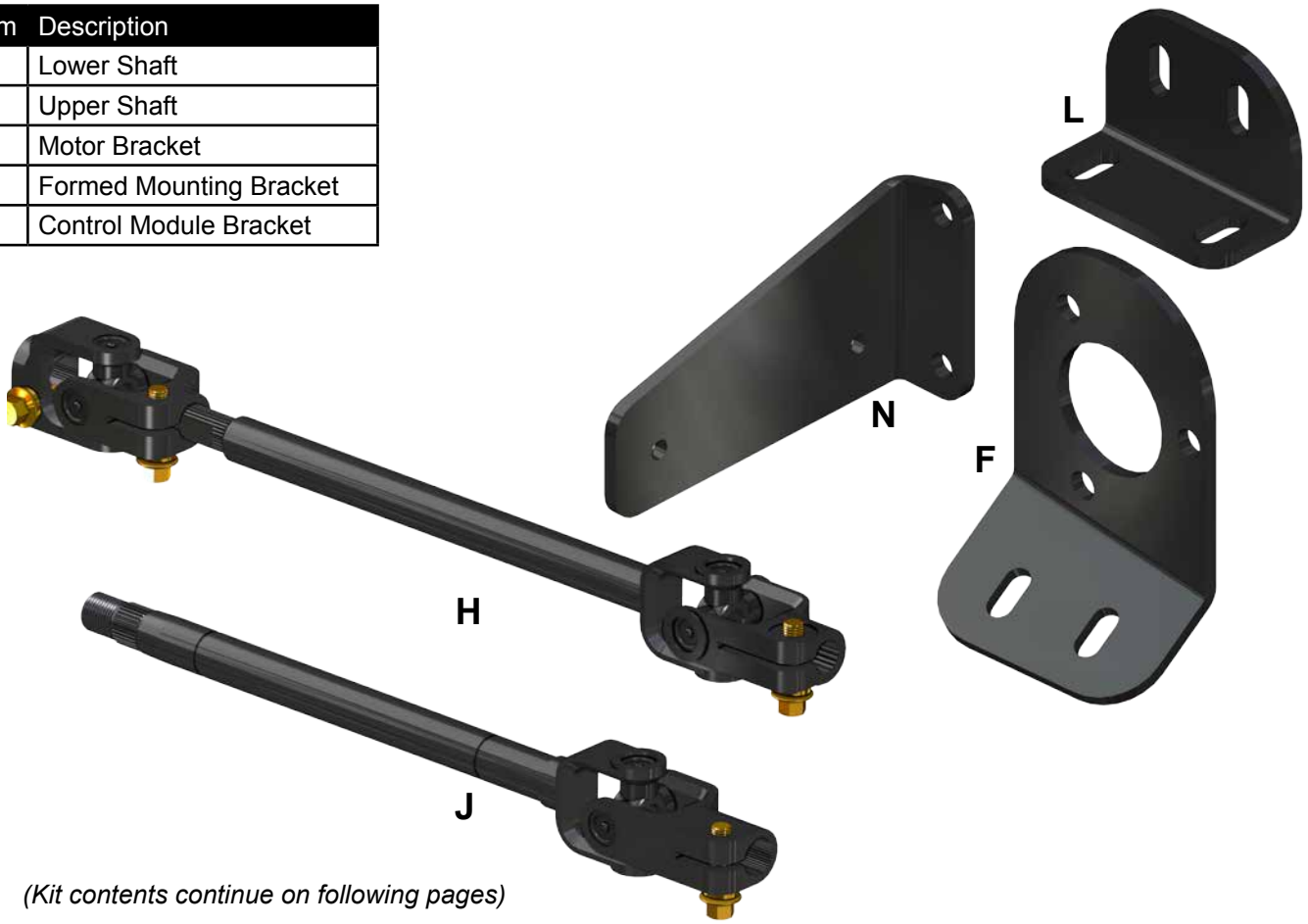

(Kit contents continue on following pages)

Liability Statement

SuperATV's® products are designed to best fit user's ATV/UTV under stock conditions. Adding, modifying, or fabricating any factory or aftermarket parts will void any warranty provided by SuperATV® and is not recommended. SuperATV's® products could interfere with other aftermarket accessories. If user has aftermarket products on machine, contact SuperATV® to verify that they will work together.

Although SuperATV® has thousands of satisfied customers, user should be aware that installing lift kits, long travel, or suspension kits, tires, etc. will change the ride of machine and may increase maintenance and part wear. Operating any off-road machine while, or after, consuming alcohol and/or drugs increases risk of bodily harm or death. No warranty or representation is made as to this product's ability to protect user from severe injury or death. SuperATV® urges operators and occupants to wear a helmet and appropriate riding gear at all times.

By purchasing and installing SuperATV® products, user agrees that should damages occur, SuperATV® will not be held responsible for loss of time, use, labor fees, replacement parts, or freight charges. SuperATV®, nor any 3rd party, will not be held responsible for any direct, indirect, incidental, special, or consequential damages that result from any product purchased from SuperATV®. The total liability of seller to user for all damages, losses, and causes of action, if any, shall not exceed the total purchase price paid for the product that gave rise to the claim.

SuperATV® will warranty only parts provided by SuperATV®. Any damage or problems with OEM housings, bearings, seals, or other manufacturers' products will not be covered by SuperATV®. SuperATV® parts and products are not warrantied if item was not installed properly, misused, or modified.

Installing, adding, modifying, or fabricating any factory or aftermarket product to your ATV/UTV may violate certain local, state, and federal laws. Be advised that laws vary depending on town, city, county, state, etc. Use of certain products on public streets, roads, or highways may be in violation law. The Buyer is solely and exclusively legally and personally responsible for any violation of the law by the installation or use of the product. You must abide by all local, state, and federal laws, including but not limited to vehicle safety, traffic laws, and ordinances. It is your responsibility to know the laws and how they apply to you.

The Buyer is responsible to fully understand the capability and limitations of his/her vehicle according to manufacturer specifications, warnings and instructions and agrees to hold SuperATV® harmless from any damage resulting from failure to adhere to such specifications, warnings and/ or instructions. The Buyer is also responsible to obey all applicable federal, state, and local laws and ordinances when operating his/her vehicle while using this product, and the Buyer agrees to hold SuperATV® harmless from any violation thereof.

Need help with your installation?

sales@superatv.com

www.superatv.com

1-855-743-3427

8:00am - 9:00pm EST M-Th
8:00am - 7:00pm EST Friday
9:00am - 2:00pm EST Saturday

Read instructions and view illustrations before beginning.

Thank You For Choosing

SUPERATV.COM®

© 2013 SuperATV.com®. All Rights Reserved.

Rev IN-PS-JD-G13-002 3/9/2018

(Kit contents continued)

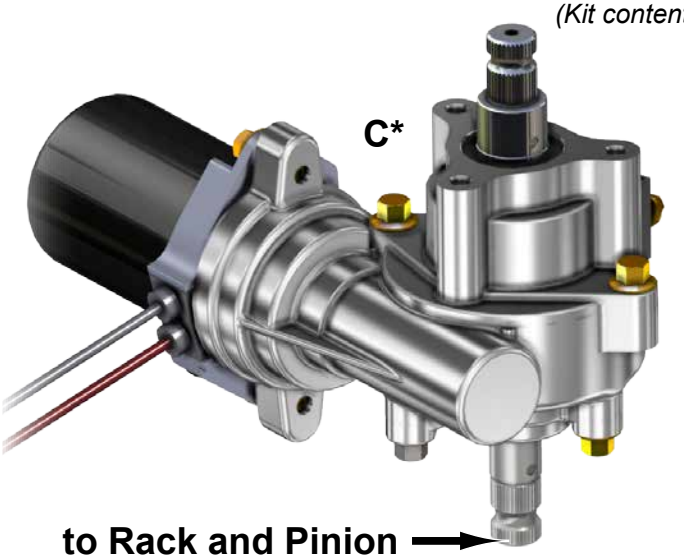





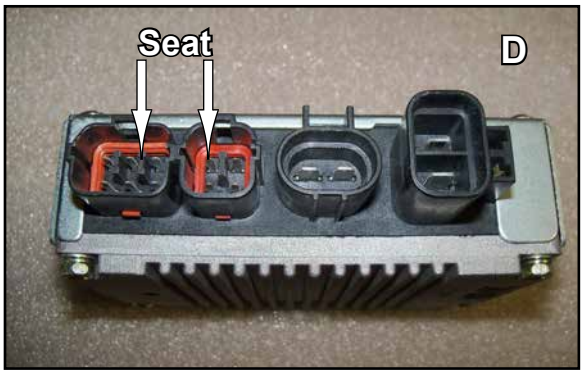

*Connections

- Before installing, ensure that all Gaskets in electrical connections are properly seated.
- If Gaskets are not seated use a Flathead Screwdriver to seat.

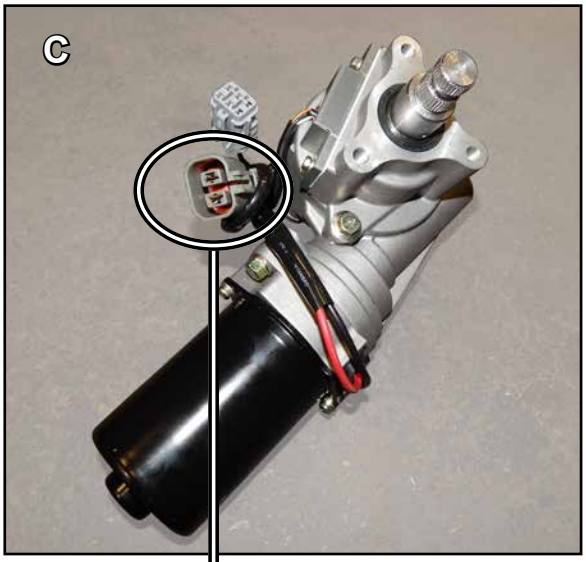

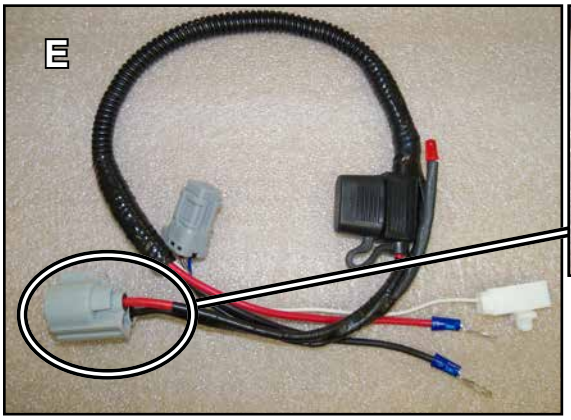



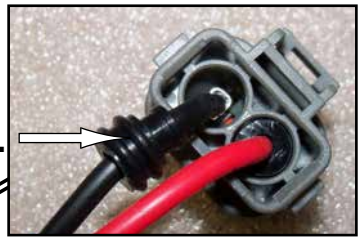

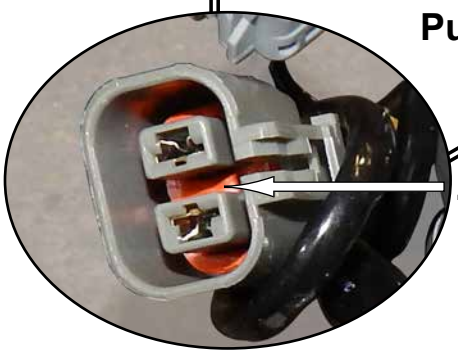

Item	Description
C	Motor (220)
D	ECU
E	Harness

(Kit contents continued)

Item	Description	Qty
A	M8-1.25 x 20mm Lg. FHCS	3
B	M6-1.0 x 16mm Lg. HHCS	2
G	M8-1.25 x 25mm Lg. FHCS	6
M	M8-1.25 Nylock Nut	2

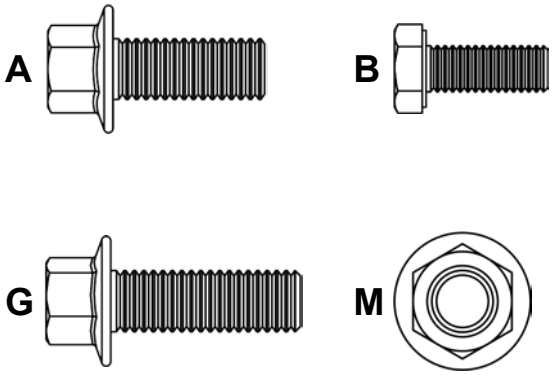

John Deere Gator RSX Models Pages 3 - 5

REMOVAL INSTRUCTIONS: ***Keep all stock hardware.***

1. Remove Steering Wheel (Steering Wheel Puller speeds this process), Snap Ring, and Screw. See Figs. 1 - 1a.
2. Remove Cup Holder from Dash. See Fig. 2.
3. Remove Plastic Nut from Ignition and remove Knobs shown in Fig. 3.
4. From Glove Box, remove Torx Head Screw. See Fig. 4.
5. Remove (4) Torx Head Screws from Dash. See Fig. 5.
6. Remove Plastic Rivet from Fender as shown in Fig. 6. Repeat for opposite side.
7. Remove Torx Head Screw as shown in Fig. 7. Repeat for opposite side.
8. Disconnect all Harness' from Dash.
9. Lightly pull Fender away and remove Dash.
10. Unplug and remove Rectifier. See Fig. 8.
11. Remove (4) Bolts and Steering Column. See Fig. 9.
12. Remove Snap Ring from Shaft. See Fig. 10.
13. Remove stock Shaft from Rack and Pinion. See Fig. 11; pull Shaft out through Dash. See Fig. 10.

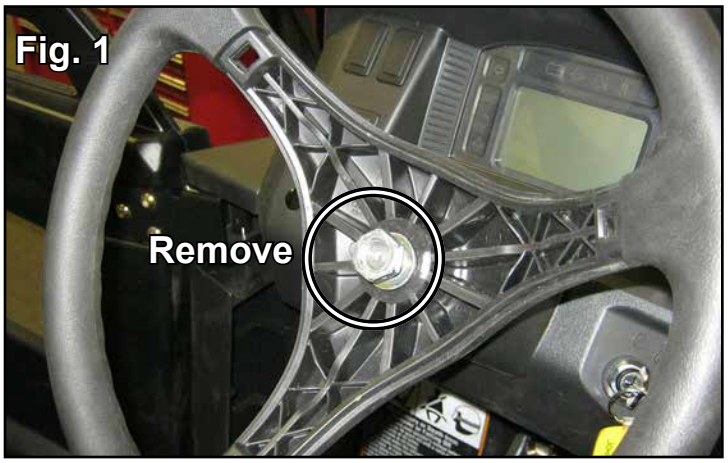

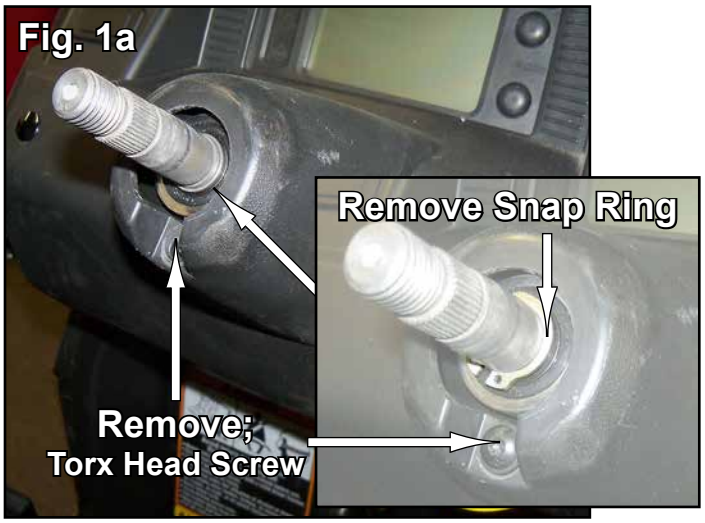

(RSX removal illustrations continue on following pages)







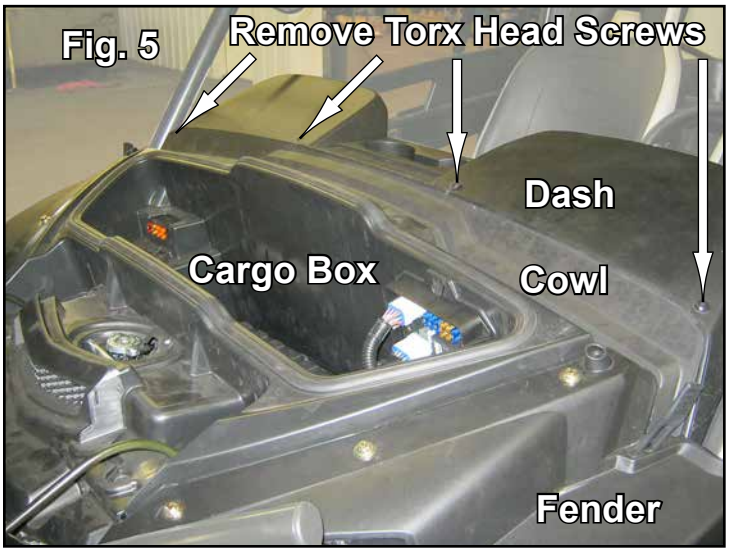

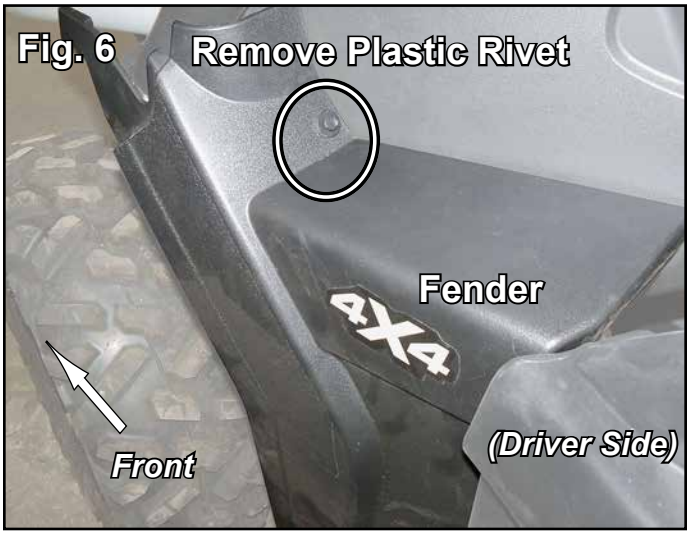

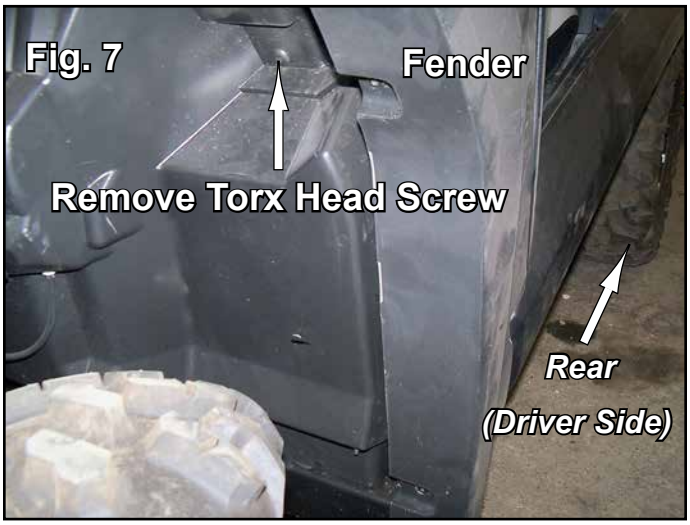

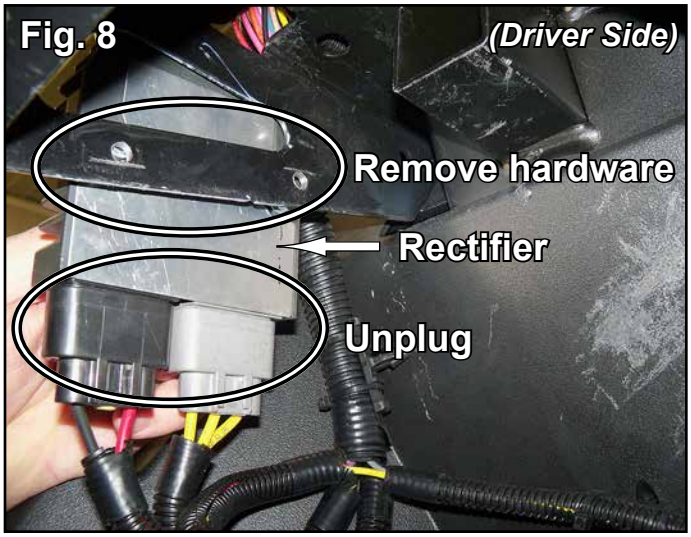

(RSX removal illustrations continue on following pages)

(RSX removal illustrations continued)

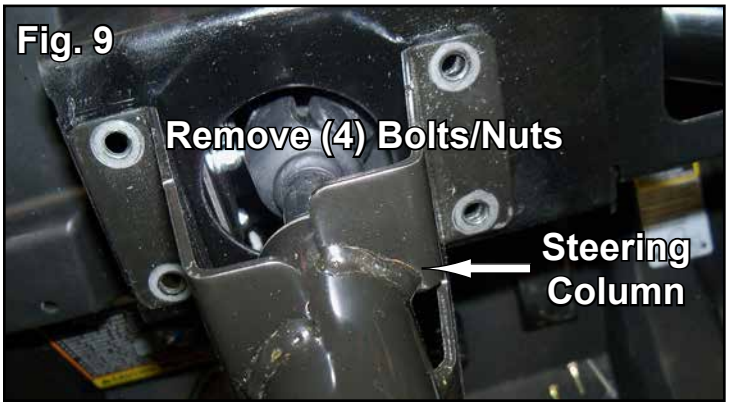

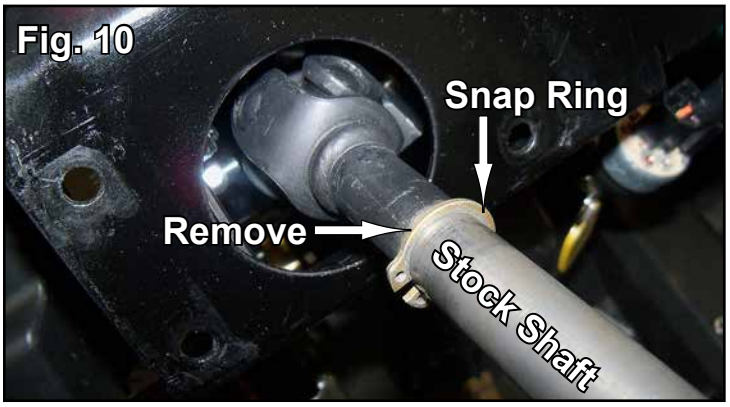

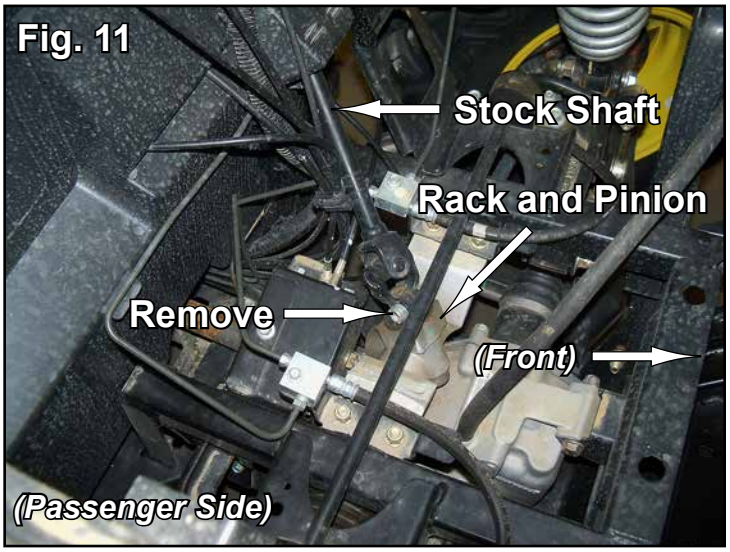

John Deere Gator XUV Models Pages 5 - 7

REMOVAL INSTRUCTIONS: ***Keep all stock hardware.***

1. Remove Steering Wheel, Snap Ring, and Screw. See Figs. 1 - 1a.
2. Remove Cup Holder from Dash. See Fig. 2.
3. Remove Plastic Nut from Ignition and remove Knobs shown in Fig. 3.
4. From Glove Box, remove Torx Head Screw. See Fig. 4.
5. Remove Fenders. See Fig. 5.
6. Remove Torx Screws joining Cowl to Dash. See Fig. 6.
7. Remove Cowl and place Dash out of way.See Fig. 7.
8. Remove (4) Bolts and Steering Column. See Fig. 8.
9. Remove Snap Ring from Shaft. See Fig. 9.
10. Remove stock Shaft from Rack and Pinion. See Fig. 10; pull Shaft out through Dash. See Fig. 9.

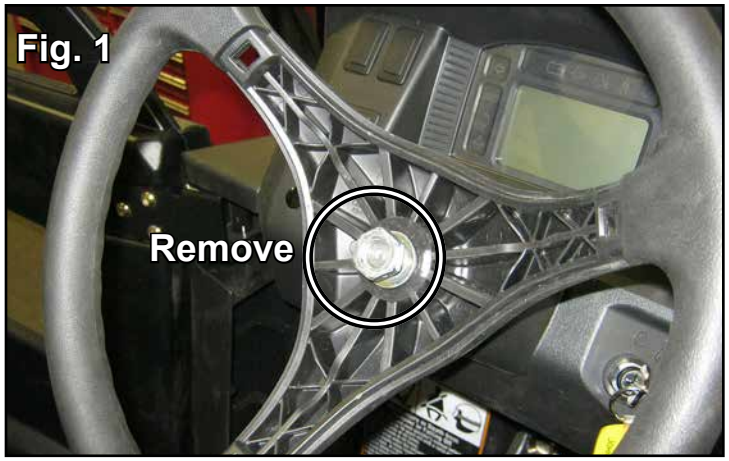

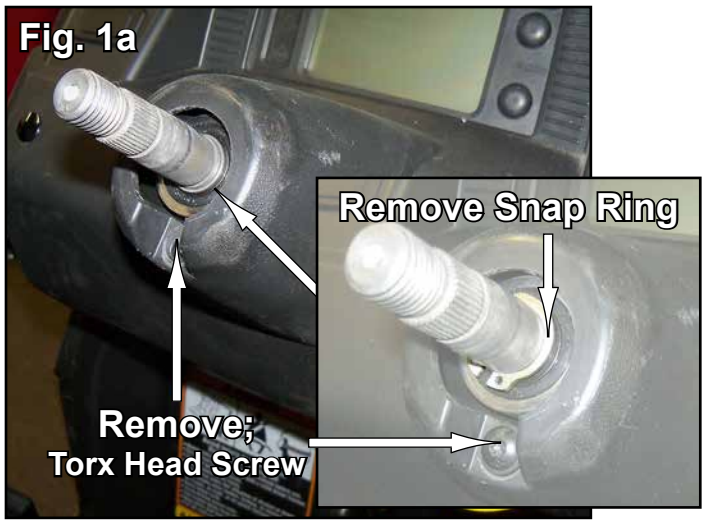











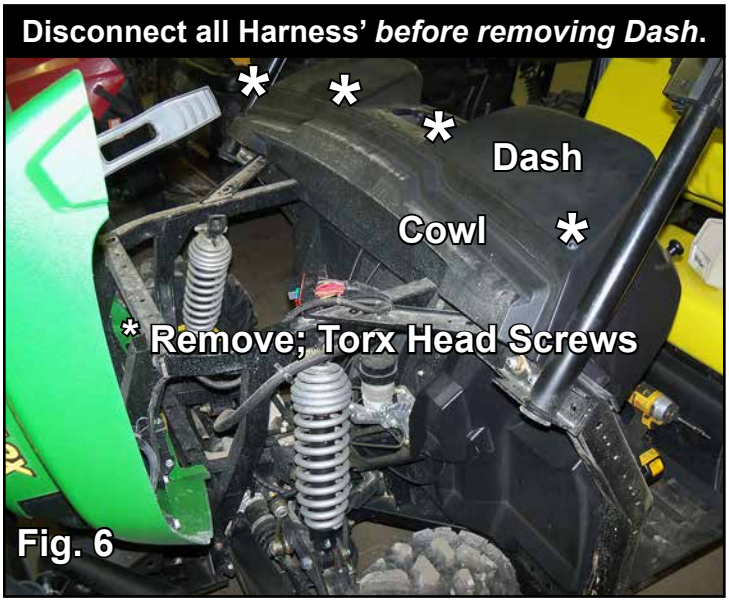



(XUV removal illustrations continue on following pages)

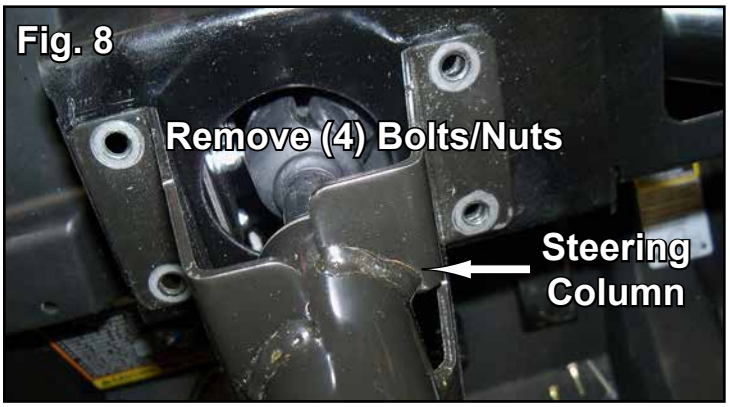
Fig. 8
Remove (4) Bolts/Nuts
Steering Column

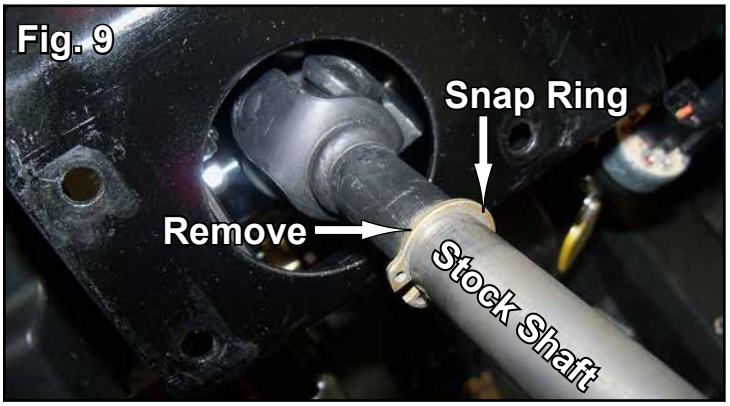
Fig. 9
Snap Ring
Remove
Stock Shaft

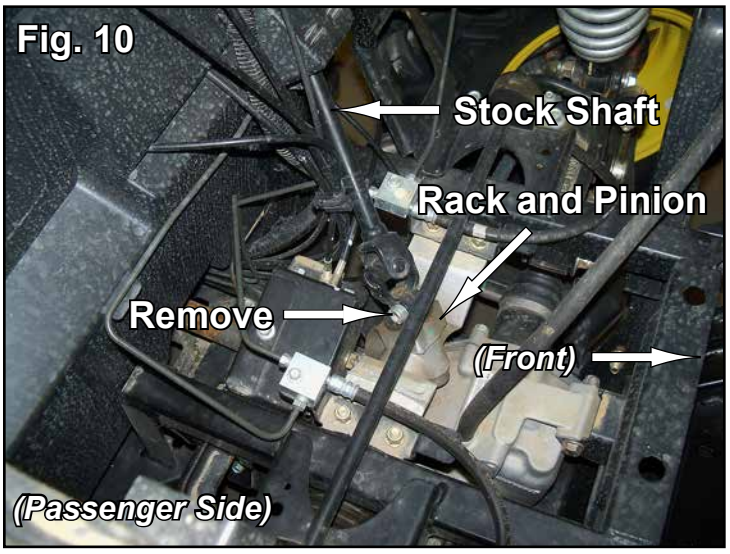
Fig. 10
Stock Shaft
Rack and Pinion
Remove
(Front)
(Passenger Side)

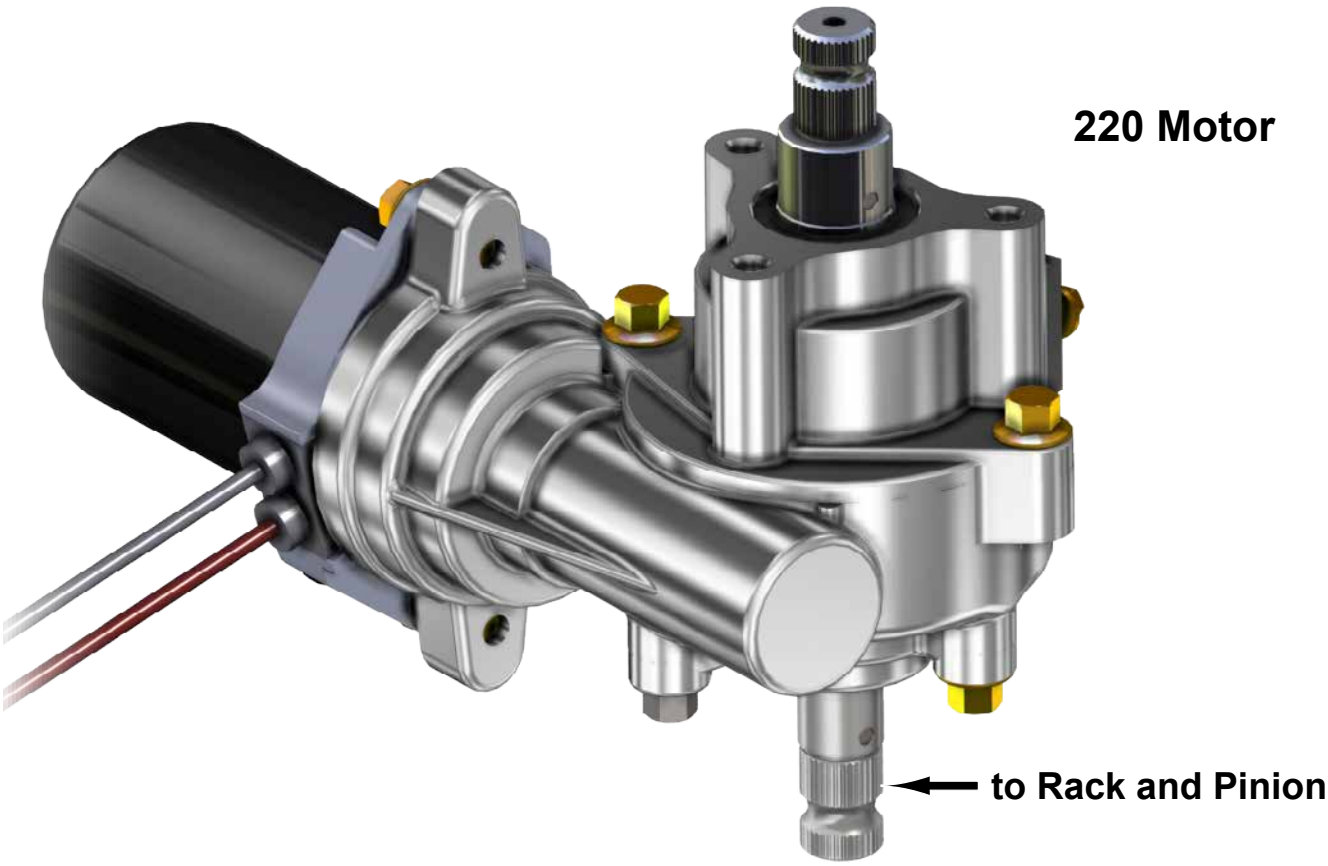
220 Motor
to Rack and Pinion

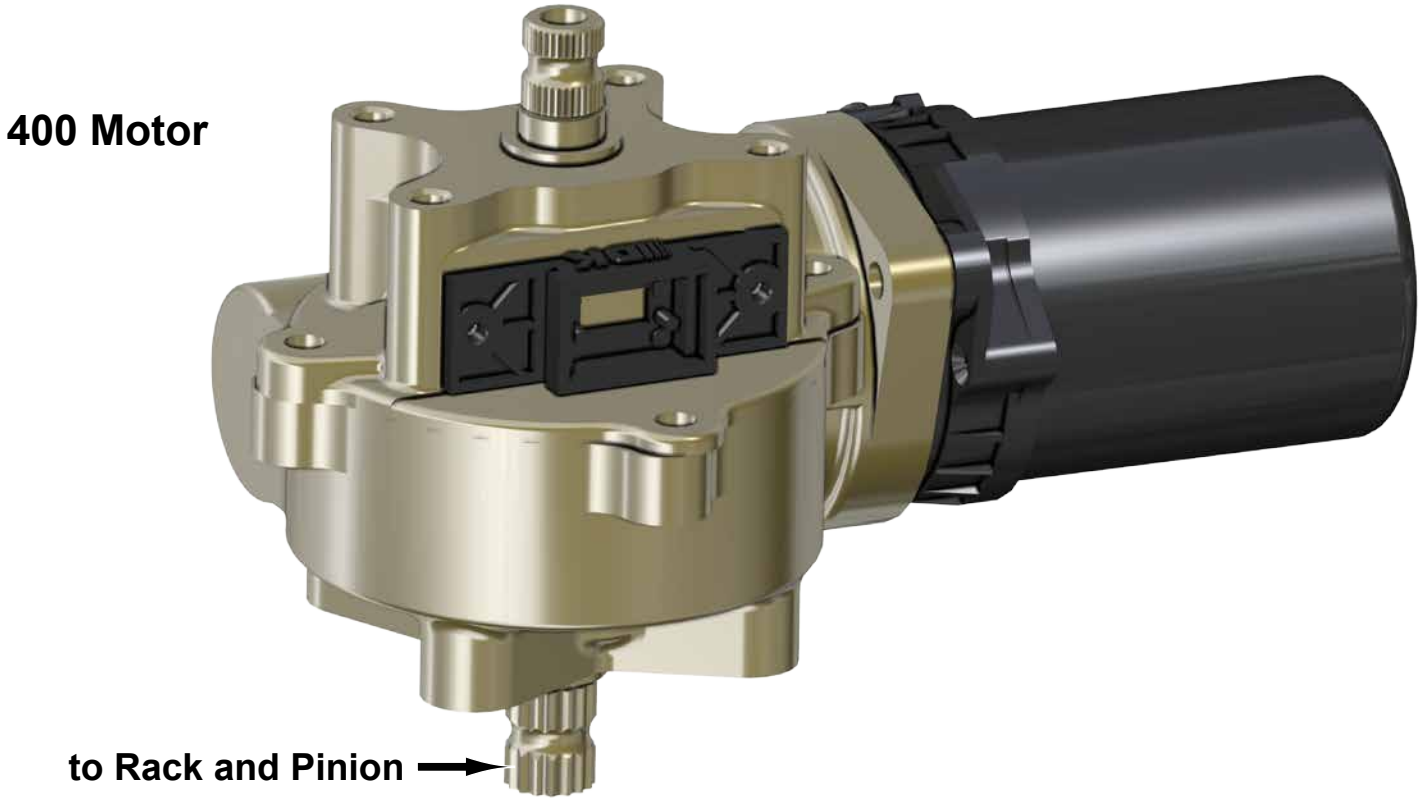
400 Motor
to Rack and Pinion

Do not tighten hardware completely unless noted.

Installation

1. Install Lower Shaft (H) through Firewall and connect to Rack and Pinion with supplied hardware. See Figs. 1 - 1a.
2. Install Motor (A) onto Lower Shaft (H) with supplied hardware. See Fig. 2.
3. Install Motor Bracket (F) to Motor (C) with M8-1.25 x 20mm Lg. HHCS (A). See Fig. 3.
4. Install Formed Mounting Bracket (L) to Motor Bracket (F) with M8-1.25 x 25mm Lg. FHCS (G) and M8-1.25 Nylock Nuts (M). See Fig. 4.
5. Install Upper Shaft (J) to Motor (A) with supplied hardware. See Fig. 4.

- Reinstall stock Snap Ring onto Upper Shaft (J) and insert Upper Shaft (J) into Steering Column. See Fig. 5.
- Secure Formed Mounting Bracket (L) and Steering Column with M8-1.25 x 25mm Lg. FHCS (G) and stock Nuts. See Fig. 5.

6. Install Control Module (D) to Control Module Bracket (N) with M6-1.0 x 16mm Lg. HHCS (B). See Fig. 6.
7. Install Control Module Bracket (N) to Frame and Steering Column with M8-1.25 x 25mm Lg. FHCS (G) and stock Nuts. See Figs. 6a - 6b.
8. Connect Wire Harness (E). See Wiring Details page 10.
9. **RSX Models**: Reinstall Rectifier with stock hardware.
10. Tighten all hardware completely.
11. Reverse steps taken in “Removal Instructions”.

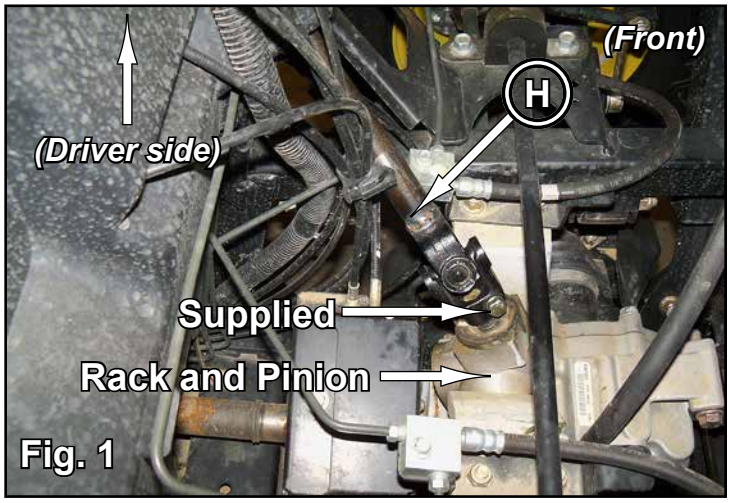

Fig. 1

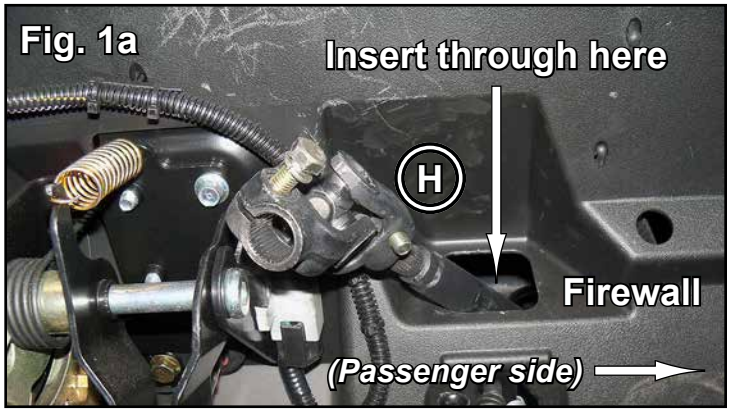

Fig. 1a

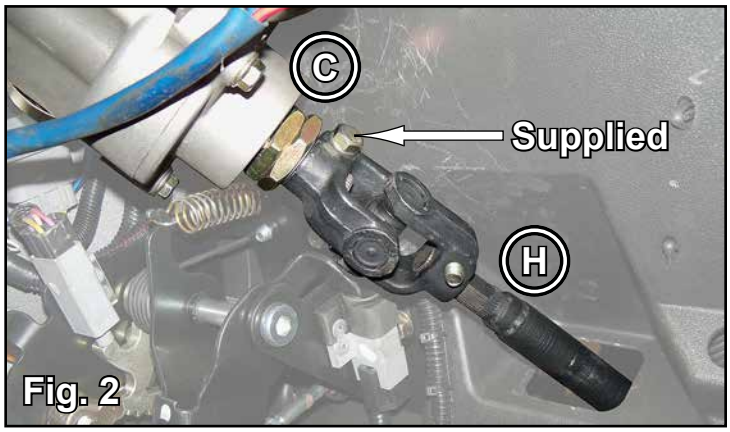

Fig. 2

(Installation illustrations continue on following pages)

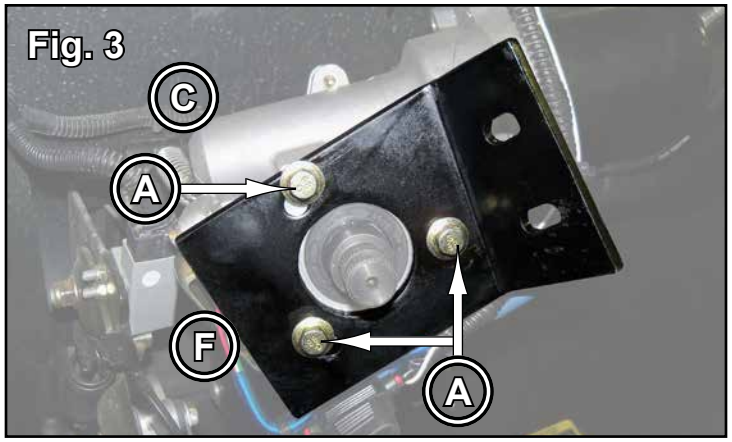

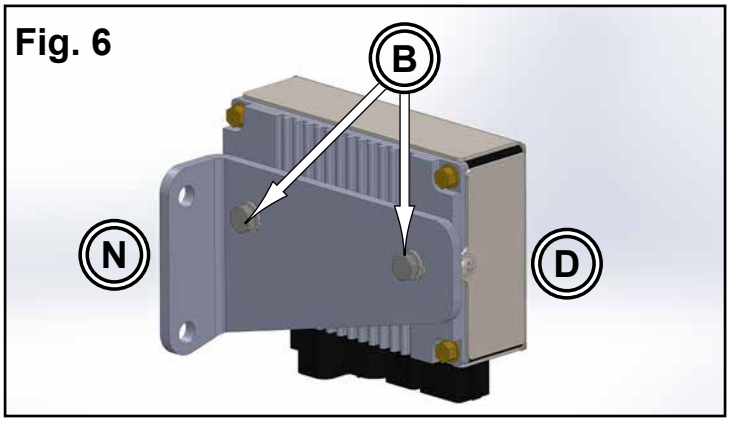

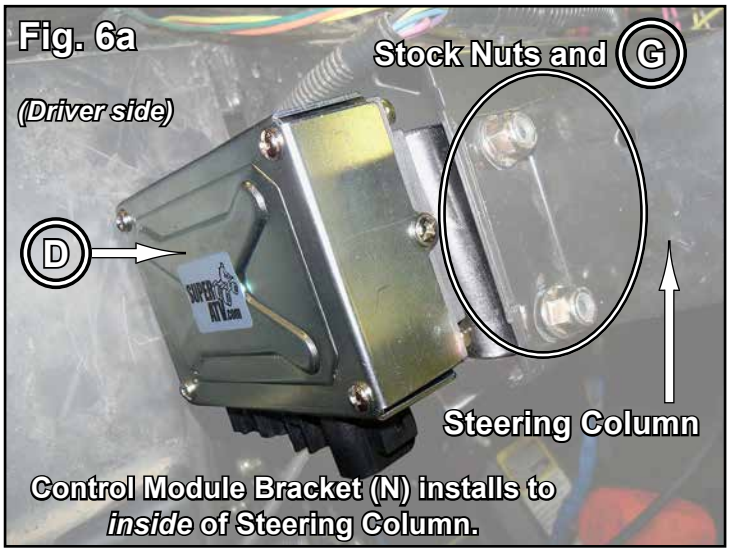

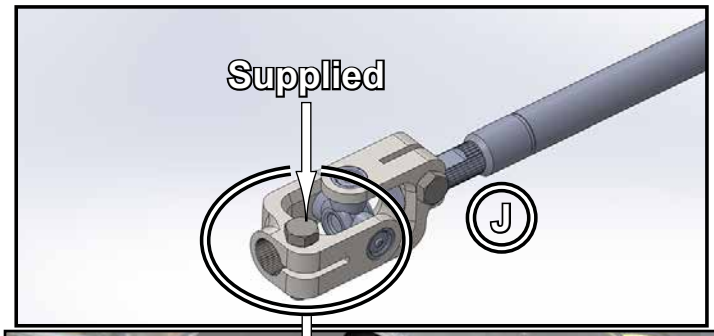

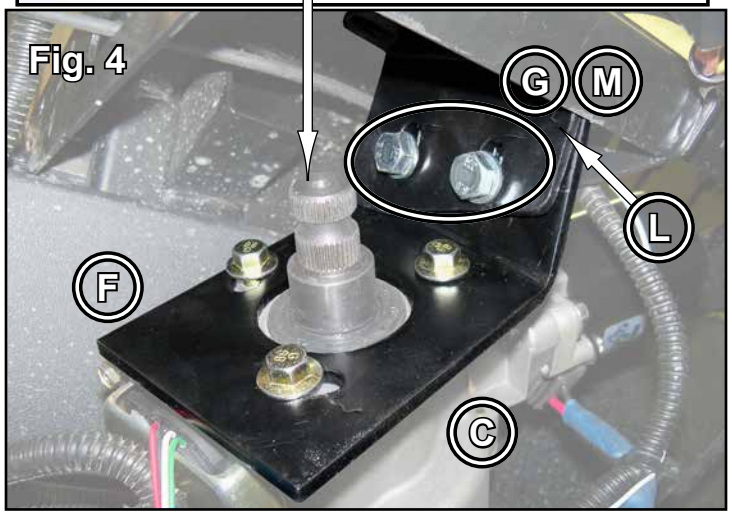

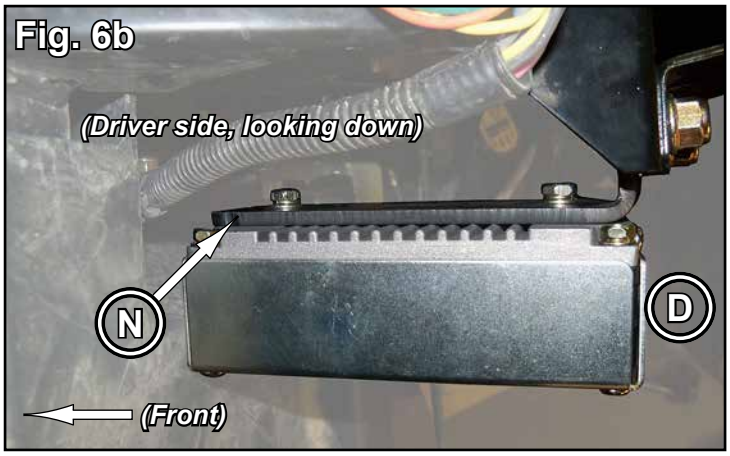

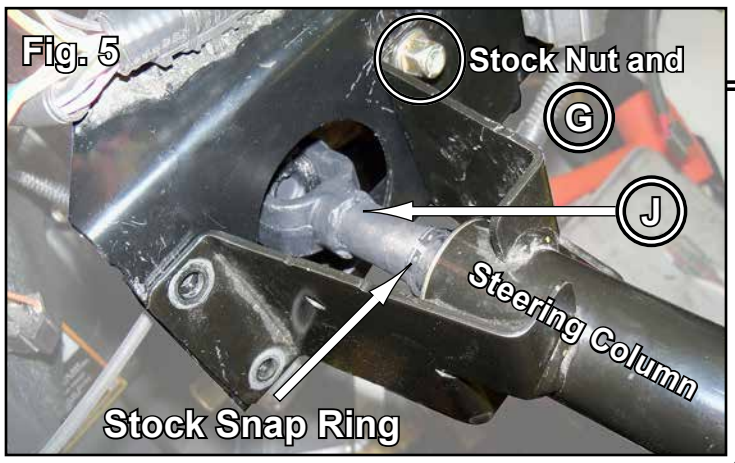



STOP **Reverse steps taken during "Removal Instructions" and reinstall components.**

Wiring Details

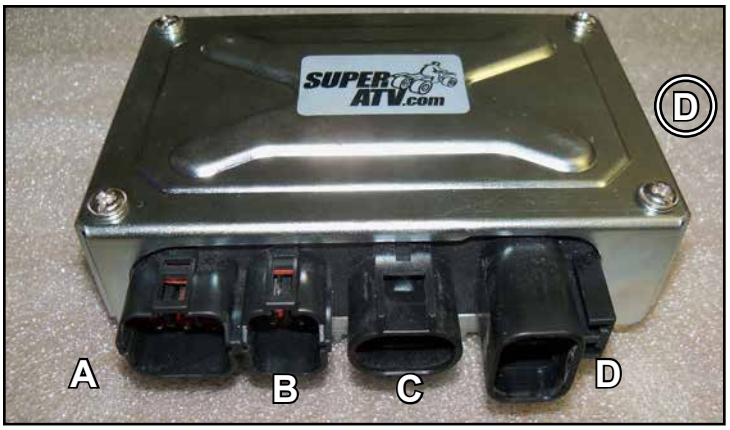

When activated, Diagnostic Light will flash (1) time for about (1) second before turning off indicating proper function. Should different patterns occur, contact SuperATV.

Secure Diagnostic Light in a visible location.



Plug	Function
A	Torque Sensor
B	Switched 12V Source; powered only when key is on.
C	Power
D	Motor

