POWEREVOLVE TS
INSTALLATION SHEET

NOTE: It is important that all the areas where the bed cover mounts to the truck are clean and free of debris before installation.

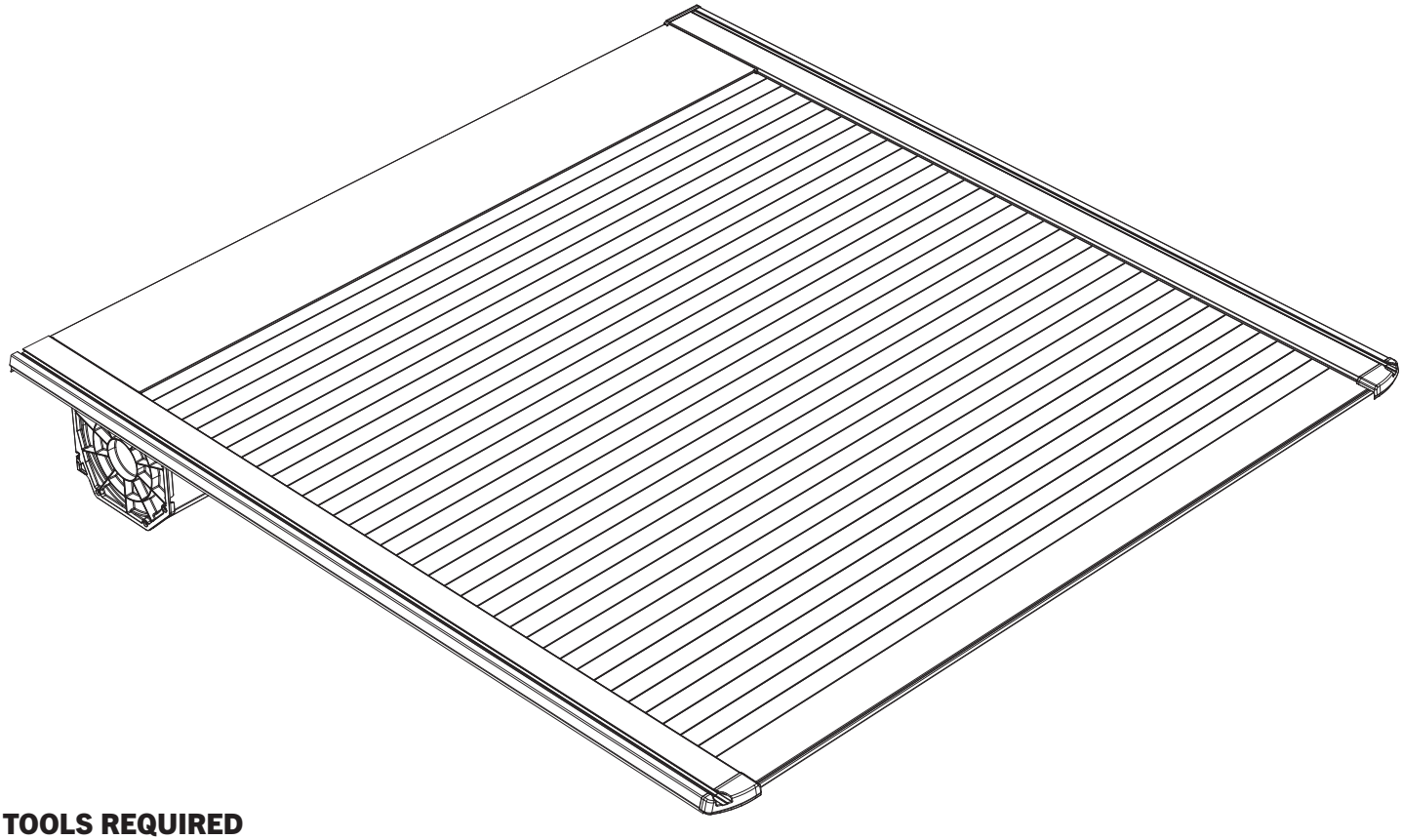

TOOLS REQUIRED

- #2 Phillips screwdriver
- 9/16” Wrench or socket
- 3/8” Wrench or socket with 1/4” drive
- 1/4” Drive ratchet
- Drill and/or impact driver
- Scissors or utility knife
- Tape measure
- Deep well socket set and ratchet
- Bit extension for drill/impact driver

TOOLS RECOMMENDED

- Step drill bit or 11/16” drill bit

CUSTOMER SERVICE | 800-206-4070 | retrax@retrax.com | 917 S. 416th St., Grand Forks, ND 58201 | www.RealTruck.com

©RealTruck Group, Inc., 2026

Part# 4000-319 Rev. 9-10-26

PARTS INCLUDED

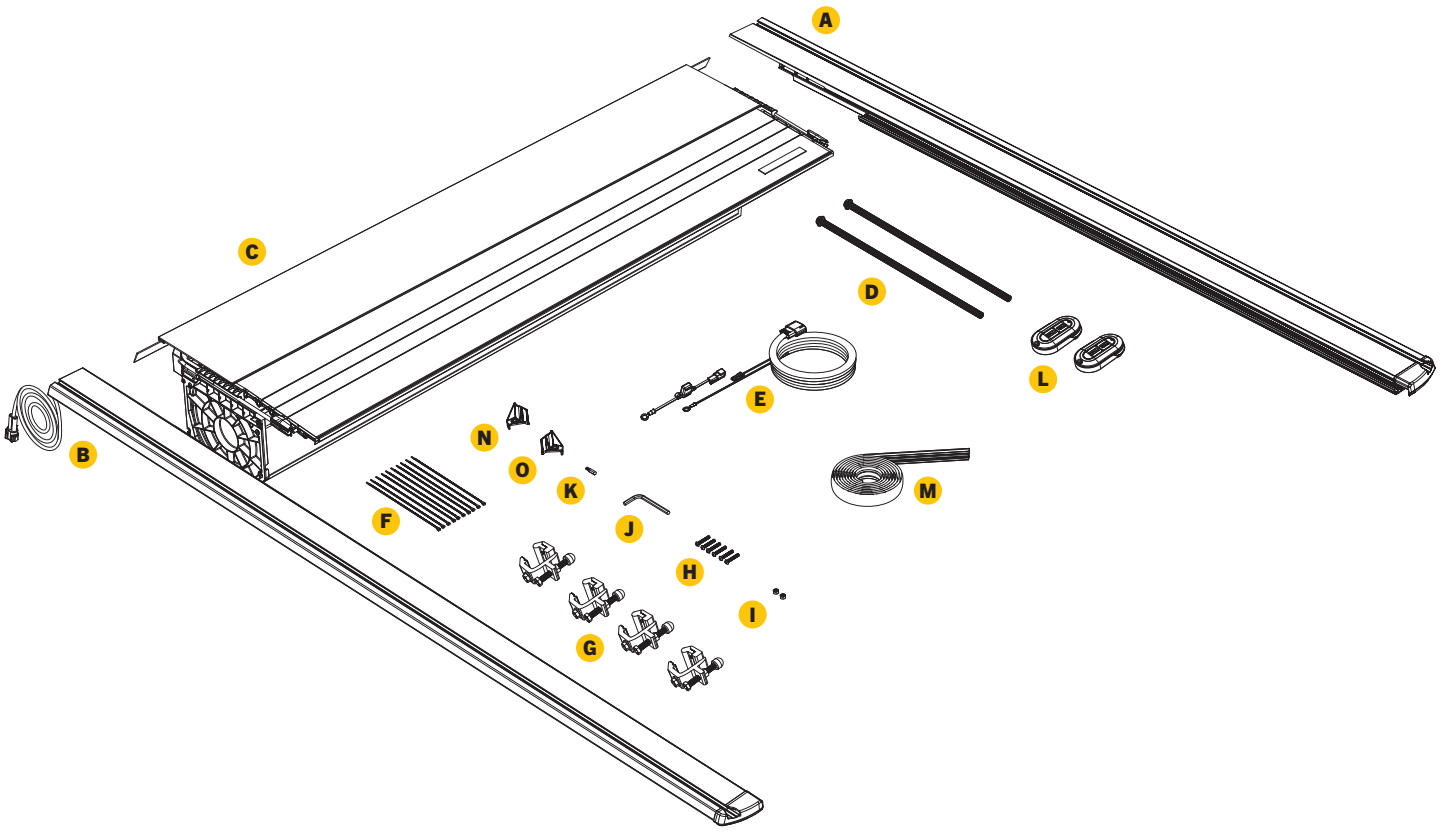

PARTS LIST

A	(1x)	Passenger side rail	I	(2x)	Lock nuts
B	(1x)	Driver side rail	J	(1x)	6mm Allen wrench
C	(1x)	Cover rolled into canister	K	(1x)	T25 Torx bit
D	(2x)	Drain tubes	L	(2x)	Remote kits - *paired with the cover from the factory*
E	(1x)	Main wiring harness - *with jumper wire*	M	(1x)	T-slot seal
F	(10x)	Zip ties	N	(1x)	Driver side canister water shield
G	(4x)	Clamp kit - *includes 4 clamp assemblies*	O	(1x)	Passenger side canister water shield
H	(6x)	Canister mounting bolts			

ENLARGED VIEW

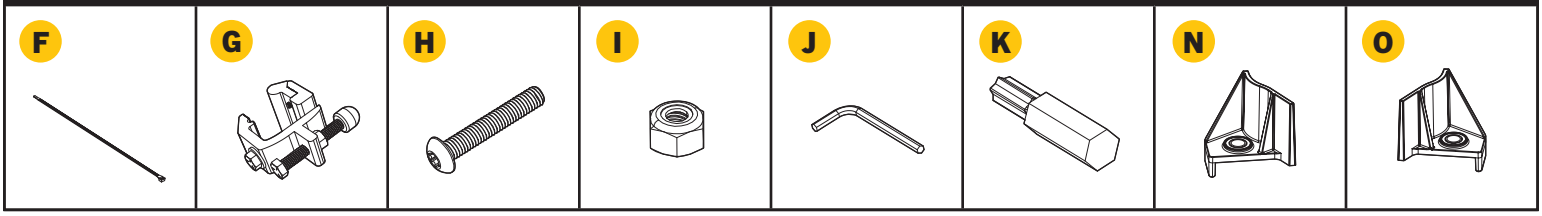

©RealTruck Group, Inc., 2026

⚠ IMPORTANT

READ BEFORE YOU BEGIN INSTALLATION

IT IS CRITICAL FOR YOUR SAFETY THAT YOU CAREFULLY READ AND FOLLOW THE SAFETY CAUTIONS AND INSTALLATION INSTRUCTIONS BOTH PRIOR TO AND DURING INSTALLATION.

USER SAFETY CAUTION

During installation, be mindful of the potential for sharp edges on the product or vehicle. Taking proper safety precautions helps ensure a safe and smooth installation process.

Always wear protective gloves and handle components with care to reduce the risk of injury.



TEMPERATURE SURFACE CAUTION

During high temperatures or extended sun exposure, surfaces of this product may become hot to the touch, posing a risk of burns or injury. Use caution when handling the product in hot weather and allow time for it to cool before contact.

Always check surface temperature before use to ensure safe handling conditions.



FASTENER TORQUE CAUTION

All fasteners must be tightened to the specified torque values provided in the installation instructions to ensure proper fit and safe operation of the tonneau cover. Under- or over-tightening can lead to product failure, potential damage to your vehicle, injury, or safety hazards while driving.

Always use a calibrated torque wrench and follow the specifications in the installation instructions.

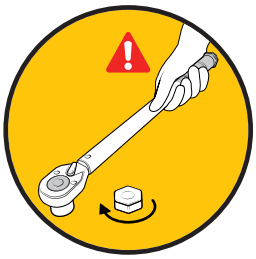

PINCH POINT SAFETY CAUTION

This tonneau cover may create pinch points when closing or operating near solid surfaces such as the truck bed rails or tailgate. To prevent injury, keep hands, fingers, and other body parts clear of moving parts during operation.

Always operate the cover slowly and with caution to ensure safe and proper use.



EXPLOSION CAUTION

Flammable gases are always present in and around battery cells. Any flame or spark near the battery can ignite these gases and cause an explosion, resulting in serious injury or property damage.

Always keep flammable objects away from the battery while working.

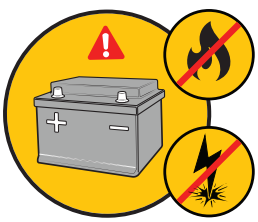

IGNITION OFF CAUTION

The ignition switch must stay in the OFF position during installation. Leaving the ignition on can cause unexpected electrical activity, damage to components, or injury.

Always confirm the ignition switch is OFF unless a step specifically instructs otherwise.

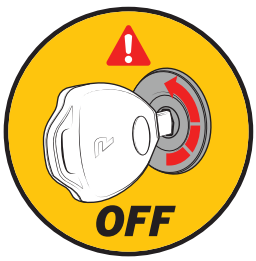

©RealTruck Group, Inc., 2026

Part# 4000-319 Rev. 9-10-26

INSTALLATION STEPS

GENERAL INSTALLATION INFORMATION:

- Make sure that all safety equipment (i.e., the hood switch and the warning label) is installed.
- Use extreme caution if the vehicle was parked outside in very cold weather - cold components tend to break more easily.
- Consult your specific Vehicle Owner's manual for any precautions from the vehicle manufacturer when disconnecting the battery.
- Once you disconnect the negative battery cable terminal, make sure it is isolated or placed away from the battery terminal to avoid unintended connection or arcing.
- Battery posts, terminals and related accessories contain lead and lead compounds, chemicals known to the State of California to cause cancer and reproductive harm. Wash your hands after handling.
- Make all necessary connections (wiring diagram) before plugging in the modules.

1 Remove screws and shipping brackets.

Part Needed

C 1x Cover rolled into canister

Before installation:

- Always cover vehicle fenders before starting to work.
- Roll down a window to avoid being locked out of the car.

1. Remove the screw and shipping bracket from both sides of the cover (C).

NOTE: Keep shipping brackets for later use.

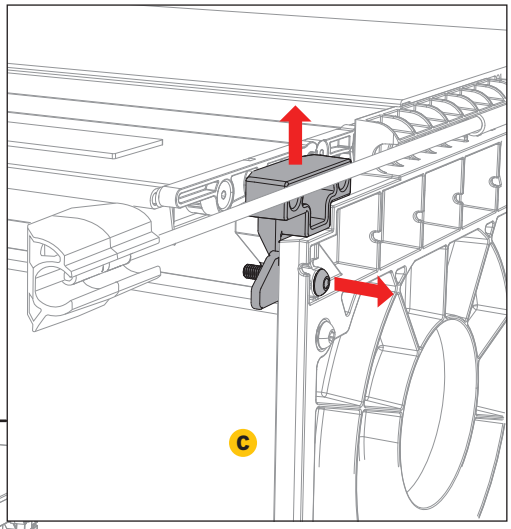

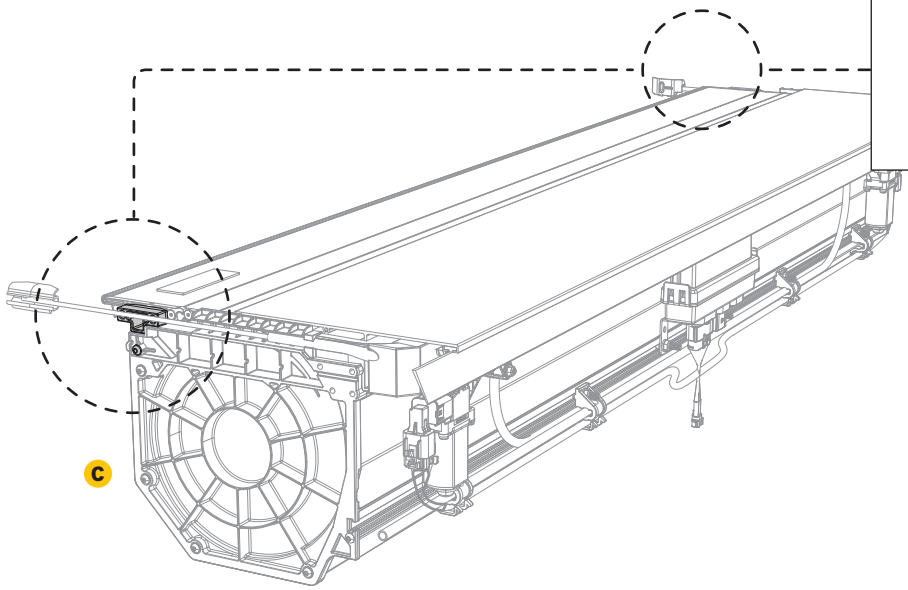

2 Install the harness for the optional passenger side LED light kit (optional installation).

Parts Needed

- 1-page installation sheet provided with harness
- 1x Passenger side LED light kit
- 1x Passenger side rail

1. If you purchased the optional Passenger side LED light kit, do not plug the connector into the cover module yet.
2. Refer to the one-page installation sheet provided with the harness.
3. Proceed to step 3.

©RealTruck Group, Inc., 2026

3 Guide the drive carriage into the rail channel.

Parts Needed

- A 1x Passenger side rail
- B 1x Driver side rail
- C 1x Cover rolled into canister

1. Pull the tail panel of the cover out of the canister (C) approximately 8-10" (203-254mm).
2. On the cab end portion of the passenger side cover rail (A), hold the rail and guide the drive carriage into the rail channel.
3. Repeat on the driver-side cover rail (B).

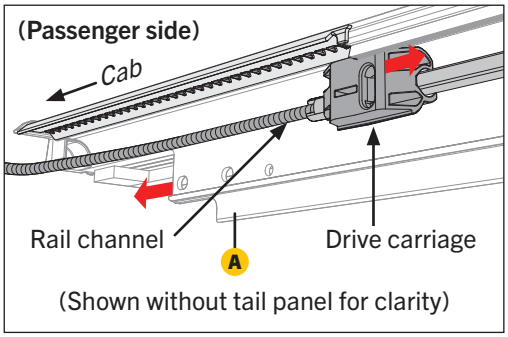

IMPORTANT: Be sure the seal at the front of each rail does not curl under, as shown in the section view.

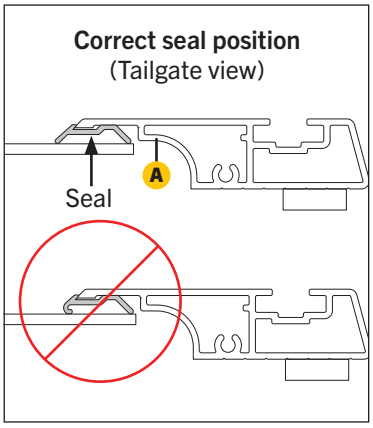

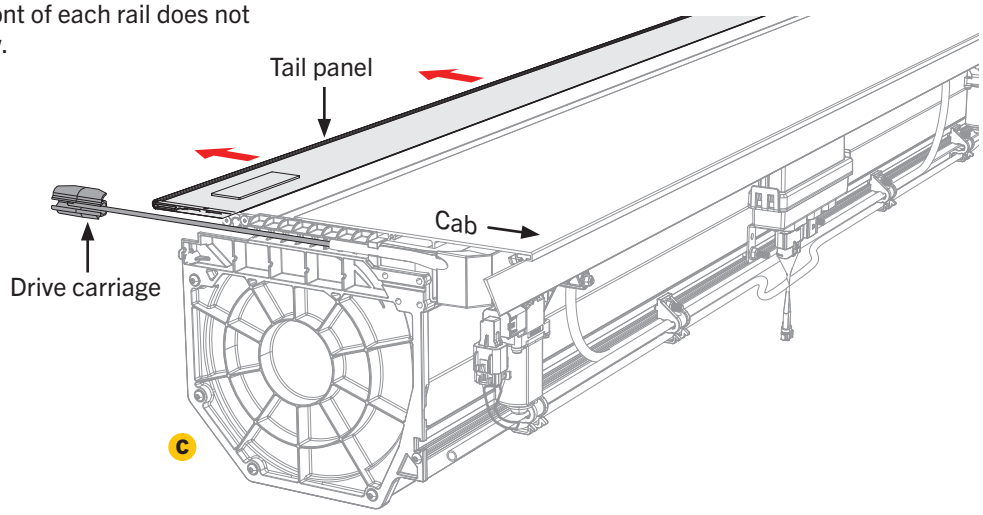

4 Secure passenger side rail to the cover.

Parts Needed

- A 1x Passenger side rail
- C 1x Cover rolled into canister
- H 3x Canister mounting bolts
- K 1x T25 Torx bit

1. Align the 3 holes in the rail (A) to the corresponding cover (C) holes.
2. Secure the passenger side rail (A) to the cover (C) with three canister mounting bolts (H) using a T25 Torx bit (K) and a drill or an impact driver with bit extension. **Tighten bolts to 35 in-lbs. (4,0 Nm).**
3. Repeat on the driver side.

NOTE: Tighten the canister mounting bolts to **35 in-lbs. (4,0 Nm)**.

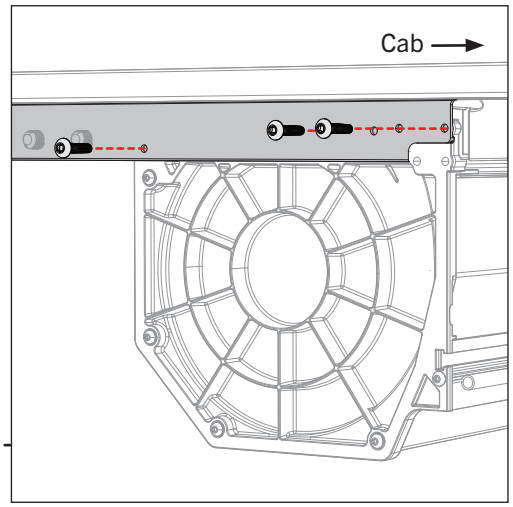

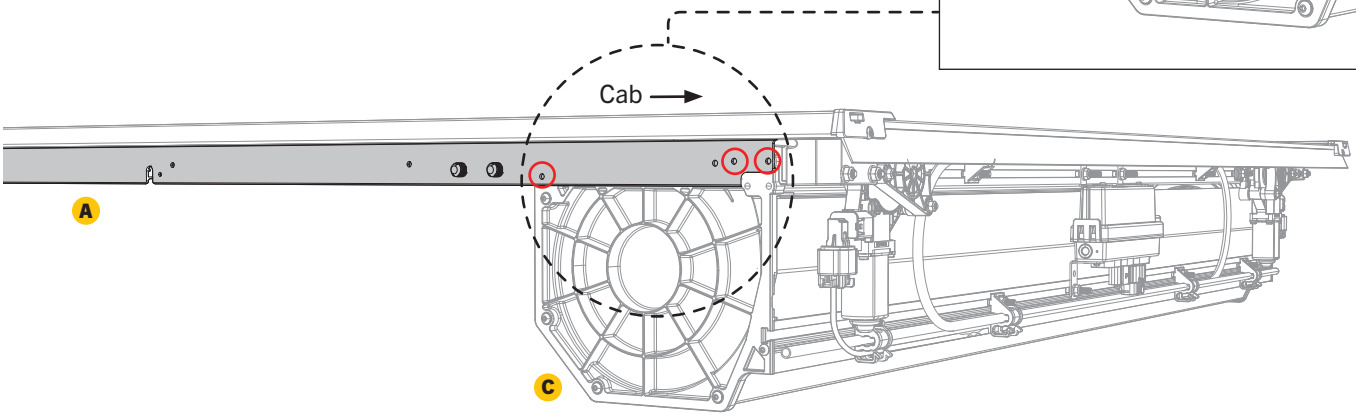

©RealTruck Group, Inc., 2026

5 Install canister water shields.

Parts Needed

- O 1x Passenger side canister water shield
- N 1x Driver side canister water shield
- I 2x Lock nut

1. Attach a passenger side canister water shield (O) and lock nut (I) to the screw closest to the tailgate side of the cover. Use a 1/4" (6mm) drive 3/8" (10mm) socket. **Tighten lock nut to 15 in-lbs. (1,7 Nm).**
2. Repeat on the driver side rail (B) with the driver side canister water shield (N).

NOTE: Tighten the lock nuts to **15 in-lbs. (1,7 Nm)**.

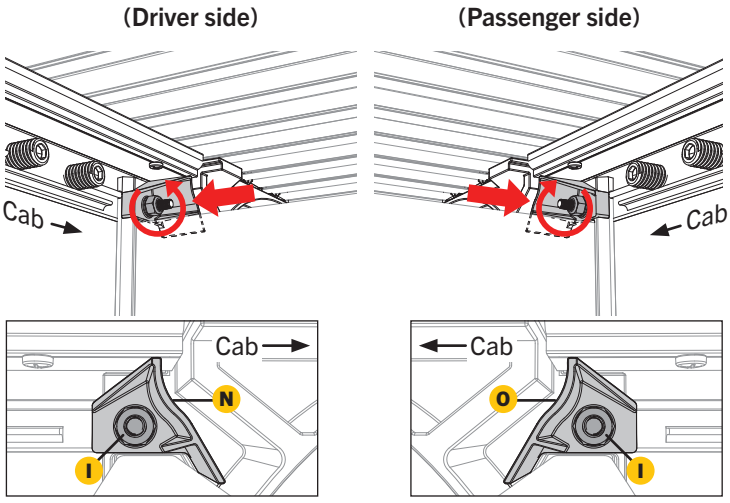

6 Route and plug in the driver side LED wiring harness connector.

Parts Needed

- B 1x LED wiring harness with light (attached to driver side rail)
- F 2x Zip ties

1. The driver side LED wiring harness with light comes attached to the rail (B), with extra harness tied at the cab end side of the rail.
2. Remove the tie and route the LED wiring harness toward the cab side of the cover.
3. Route the harness toward the cover module, securing it to the two plastic clips.
4. Plug the LED wiring harness connector into the cover control module's connector.

NOTE: Tidy up excess wire with two of the provided zip ties (F).

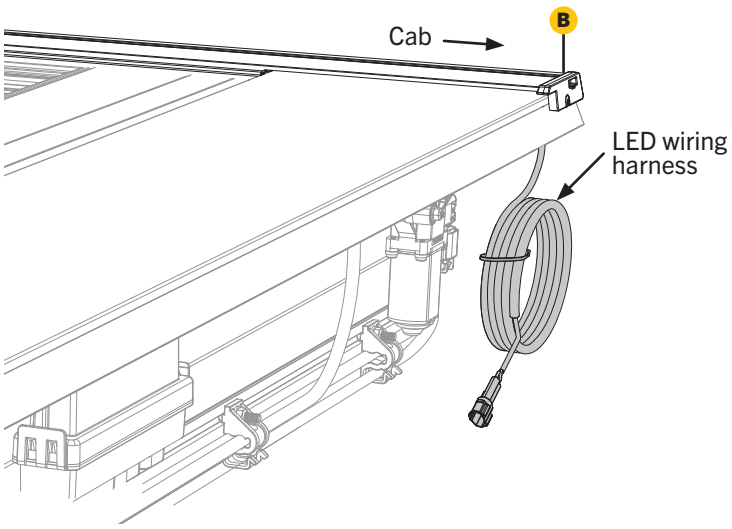

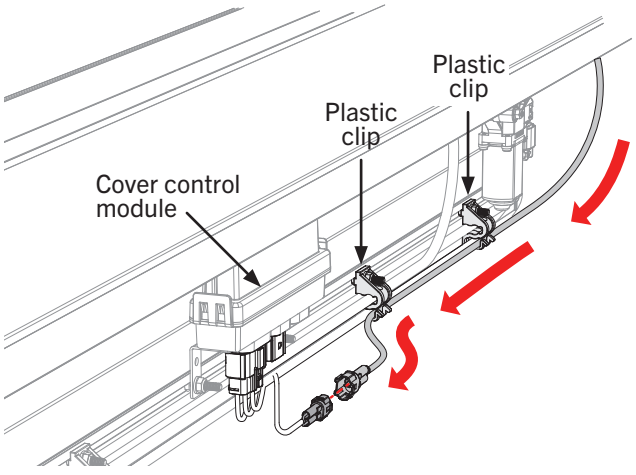

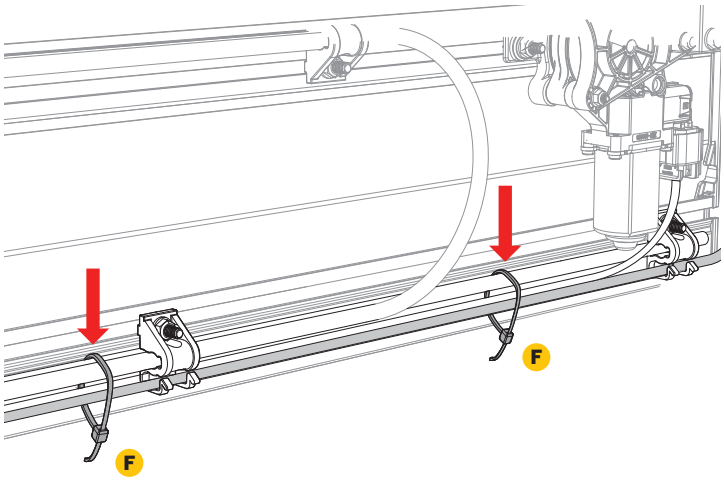

©RealTruck Group, Inc., 2026

7 Feed the main wiring harness through the pickup bed hole.

Parts Needed

E 1x Main wiring harness

1. Locate your battery in the engine compartment.
2. Determine if your battery is on the driver or passenger side of the vehicle.
3. Route the main wiring harness on the same vehicle side as the battery.
4. Feed the battery terminal connection end of the main wiring harness (E) into the available pickup bed hole.
5. Bring the wire down between the bed and the cab.

NOTE: Leave enough wire harness slack in the pickup bed to allow connection to the cover control module in step 18.

CAUTION: If there is not a suitable hole in the bed, you can drill one, but use great caution. Be aware of lines and anything else behind drill surfaces. Keep the wires away from moving parts and exhaust.

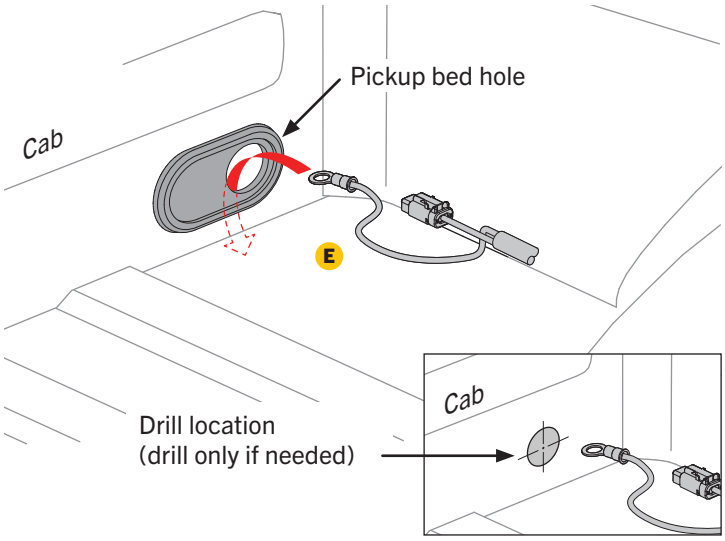

8 Route the main wiring harness toward the battery.

Parts Needed

F 1x Zip tie

1. Route the main wiring harness (E) along the frame rails on the underside of vehicle.
2. Secure the wiring harness near the battery with a zip tie (F).

IMPORTANT: Keep the wire as high as possible to prevent damage when driving. Keep wires away from moving parts and exhaust.

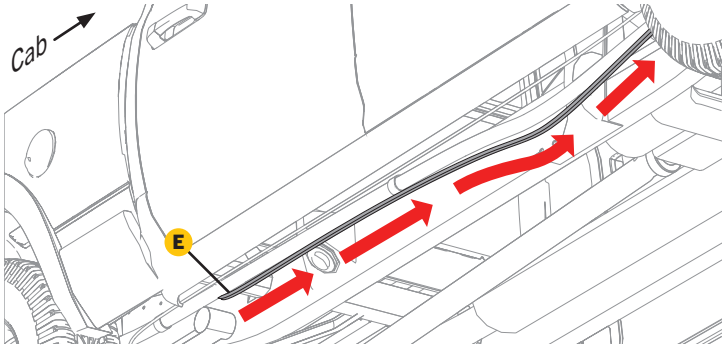

9 Connect the negative battery terminal connector to the vehicle battery. ⚠

Parts Needed

F 4x Zip ties

1. Use a ratchet and necessary socket to connect the negative (-) ring terminal on the main wiring harness to the ground on/near the battery.
2. Connect the positive (+) ring terminal on the main wiring harness to the positive terminal on the battery.
3. Connect the jumper wire to the main power harness with the in-line connector.
4. Start from the battery and neatly organize and secure the main wiring harness with the provided zip ties (F).

IMPORTANT: Zip tie the wires away from moving parts and hot areas like the exhaust.

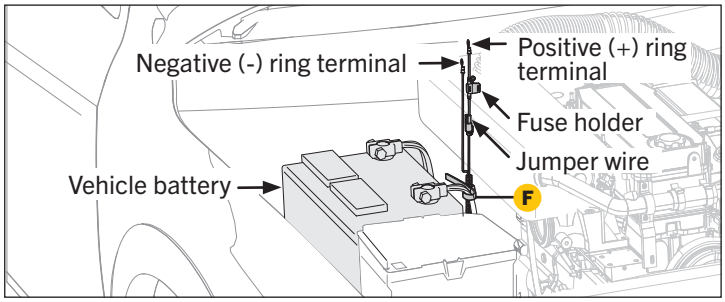

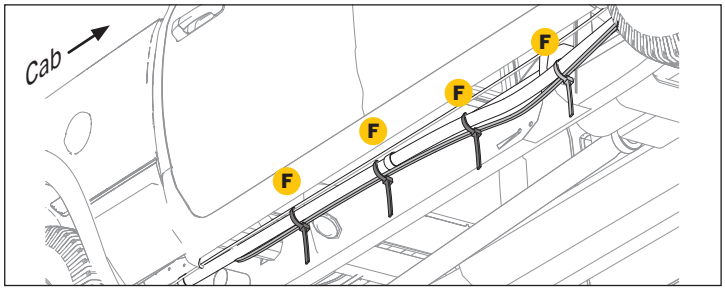

©RealTruck Group, Inc., 2026

10 Temporarily remove the 30A fuse and disconnect the negative battery terminal.

1. Remove the APR-30A rated fuse from the fuse holder.
2. Disconnect the negative battery terminal.

IMPORTANT: It is important to remove the fuse and negative battery terminal for safety. Live wires may arc unintentionally if touched to a metal surface. This could blow a fuse and cause cover failures.

11 Remove the protective film and lift the cover assembly onto the truck. ⚠

1. Remove all protective film from the cover (C).
2. **With two people**, lift the assembly onto the truck.
3. Position the canister portion near the bulkhead/cab.
4. Be sure the front seal of the cover lays flat and is forward toward the cab.

IMPORTANT: Use two people to lift the cover assembly onto the truck.

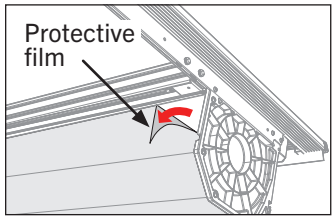

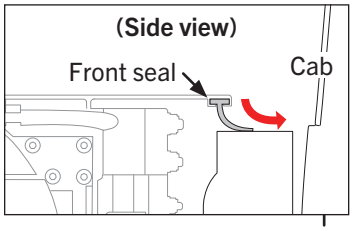

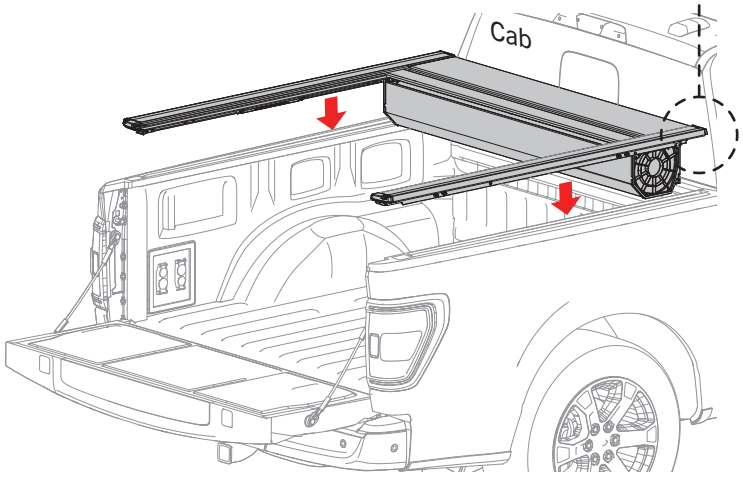

12 Position the cover assembly.

1. With the cover in place, the front seal should lay flat on the bulkhead, but must not extend past the bed rail cap.
2. Trim the seal as needed, so it lays flat.
3. Move the cover (C) toward the tailgate and position both rails 1/8" (3.2mm) from the tailgate.
4. Use the shipping brackets removed in step 1 for spacing between the end of rail and the tailgate.

NOTE: The lower rail flange should touch the lower portion of the shipping bracket when spaced properly.

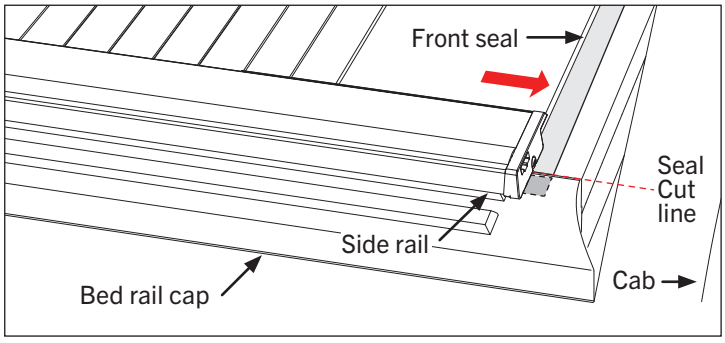

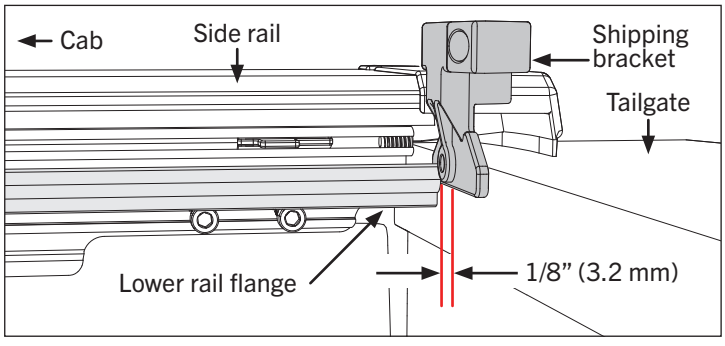

©RealTruck Group, Inc., 2026

13 Position clamps onto side rail and truck bed rail.

Parts Needed

G 4x Clamp kits

1. Locate the adjustment screws, both front and back, on the passenger side rail (A).
2. Position the clamps (G) between the adjustment screws.
3. Tuck the adjustable top jaw of the clamp firmly into the top inside corner of the sheet metal on the truck bed rail.
4. If the jaw does not contact firmly into the corner of the bed flange, remove the clamp and loosen the screws to adjust the jaw.
5. Re-tighten the screws to fully engage the lock washers.
6. Repeat on the driver side rail (B).

NOTE: Always make sure that two sets of teeth are fully engaged.

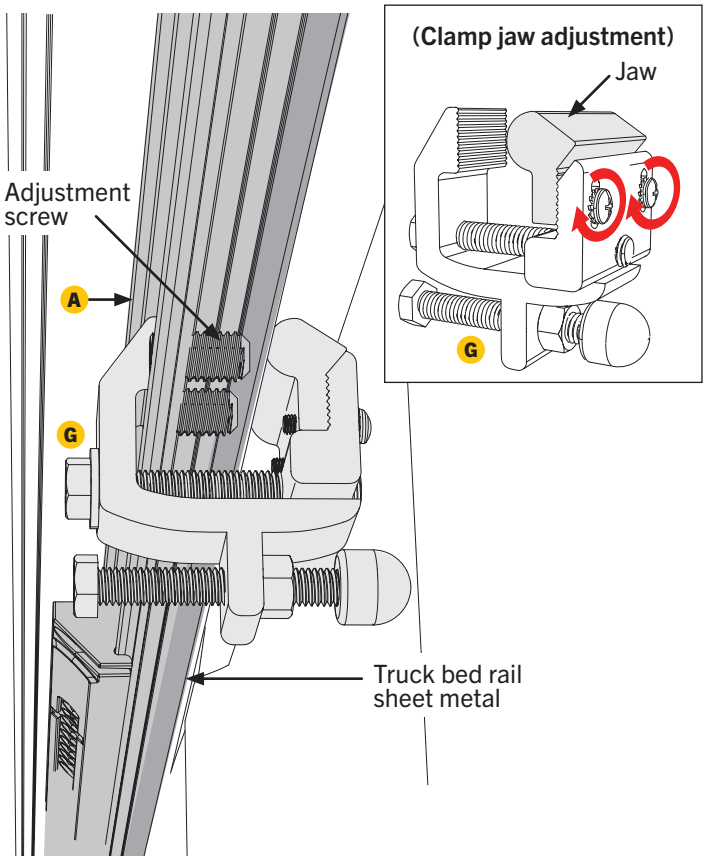

14 Tighten the clamp kits.

1. Using a 9/16" wrench, tighten the clamps (G) to **6.7 ft-lbs. (9,1 Nm)**.
2. Push down on the passenger side rail (A) while tightening.
3. Pushing down positions the rail best to minimize water intrusion, but do not push down too close to the top of the tailgate - it will interfere with opening and closing the tailgate.
4. Repeat on the driver side rail (B).

NOTE: Tighten the clamp bolts to **6.7 ft-lbs. (9,1 Nm)**. Due to variations in vehicle designs, the clamps may fit differently on your truck than on our test vehicles. Retrax is not responsible for cover-to-vehicle installation. Nor is Retrax liable for any damages resulting from attachment, installation, or use.

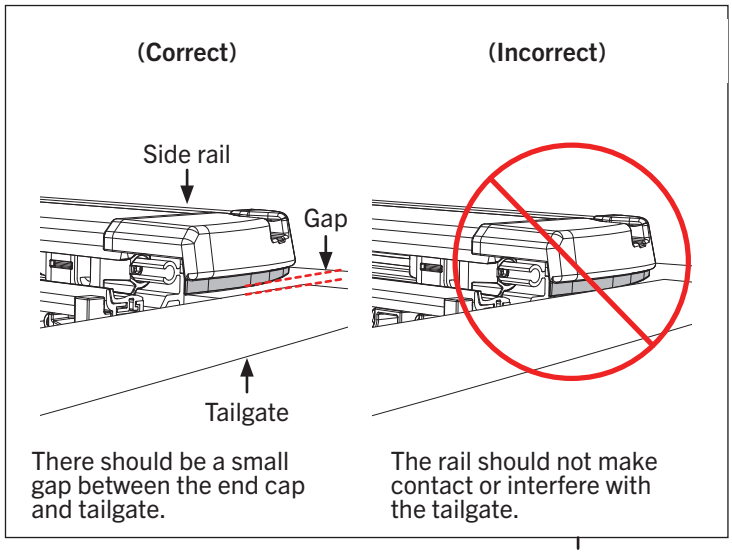

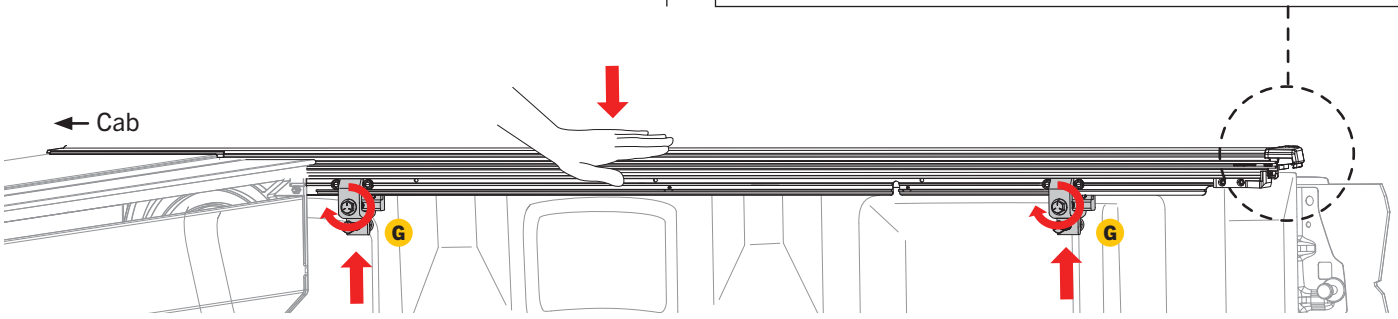

©RealTruck Group, Inc., 2026

15 Verify that the side rails are parallel.

1. Measure the distance at point A from the top inside of the rails.
2. Verify that points B and C measure +/– **1/16" (1.6 mm)** as at point A from the top inside of the side rails.
3. Proceed to step 17 if the rails are parallel.

IMPORTANT: It is important that the rails are parallel. If the rails are not parallel, proceed to step 16 to make adjustments.

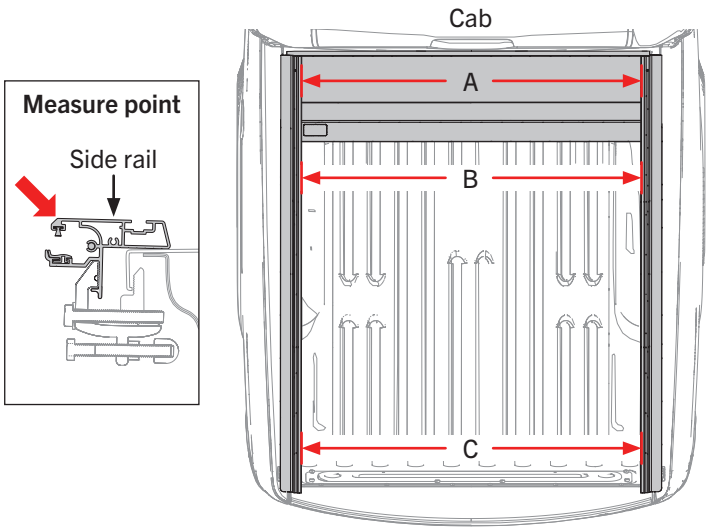

16 Adjust the side rails if they are not parallel.

Parts Needed

J 1x 6mm Allen wrench

1. Remove the clamps (G) and turn the white side rail adjustment screws with the 6mm Allen wrench (J) to adjust the rails.
2. One complete turn = 1/16" (1.6 mm). Turn both screws.
3. If the rails measure too close together, turn the screws counter-clockwise.
4. If the rails measure too far apart, turn the screws clockwise.
5. When properly adjusted, tighten the clamps as in steps 13-14 then proceed to step 17.

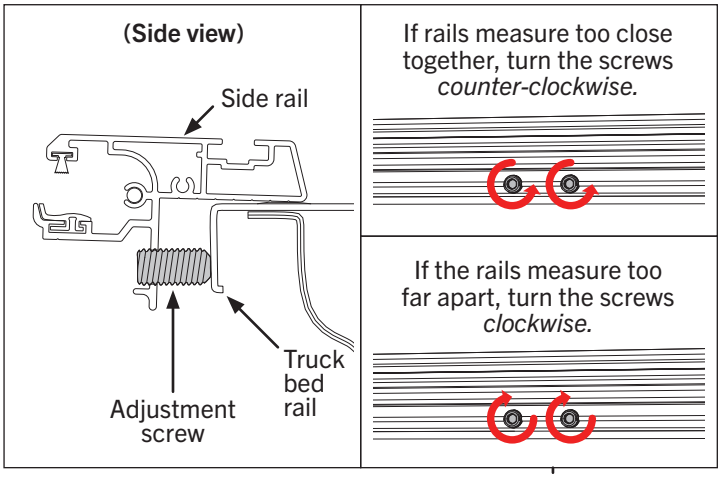

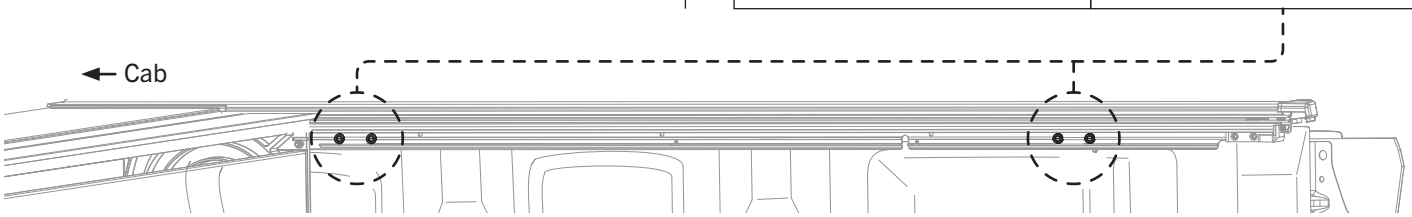

17 Set the stand-off bolts and tighten the jam nuts.

1. When the measurements are correct from step 15 or 16, tighten each stand-off bolt on each clamp so that there is approximately a 2° upward tilt to each rail.
2. Once stand-off bolt is set, tighten the jam nuts to **6.7 ft-lbs. (9,1 Nm).**

NOTE: Tighten the jam nuts to **6.7 ft-lbs. (9,1 Nm).**

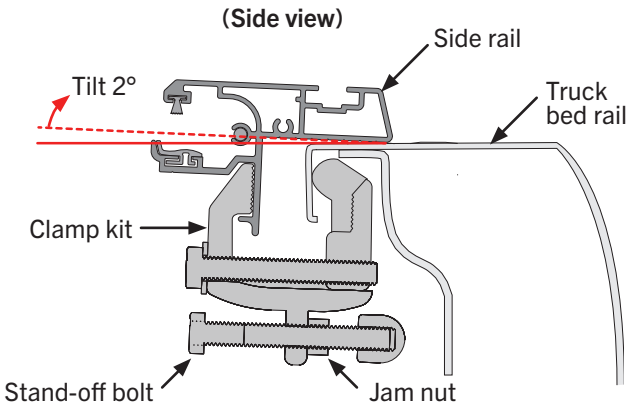

©RealTruck Group, Inc., 2026

18 Attach the main wiring harness connector to the cover control module. ⚠

Parts Needed

F 1x Zip tie

1. Locate the main wiring harness (E) installed in steps 7-9.
2. Attach the connector on the wiring harness to the connector on the cover module on the back of the cover (C).
3. Once connected, secure the main wiring harness to the cover (C) with the provided zip tie (F), as shown.

(Back of cover)

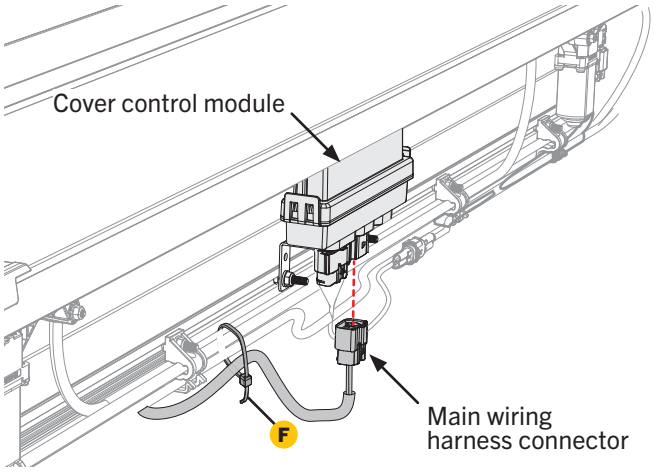

19 Neatly organize and secure extra slack in the main wiring harness. ⚠

Parts Needed

F 3x Zip tie

1. Go back underneath the vehicle where you zip-tied the main wiring harness (E).
2. Pull out all extra slack in the harness.
3. Neatly organize and secure the extra slack using a zip tie (F).

IMPORTANT: Keep the wires away from moving parts and hot areas like the exhaust.

(Underside of vehicle)

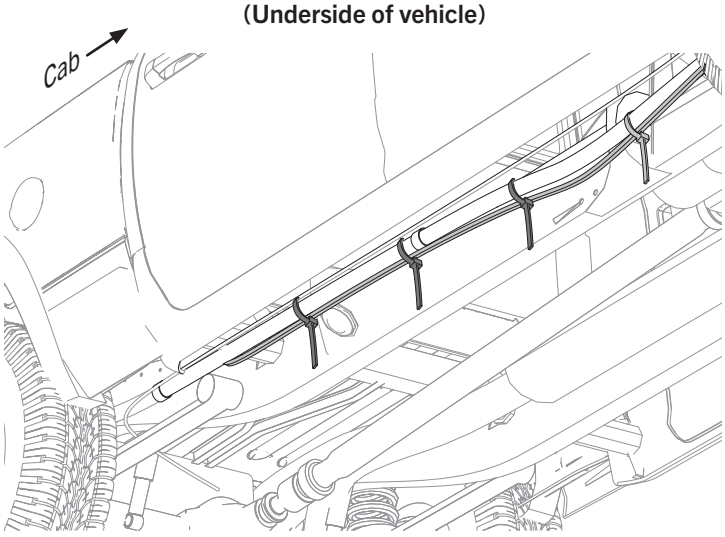

20 Install drain tubes.

Parts Needed

D 2x Drain tubes

1. Insert a drain tube (D) into the cover (C) on both the driver and passenger sides.
2. Rotate it to the right (clockwise). The fitting will click twice when secure.
3. Generally, route the drain tubes out through a hole drilled in the factory bed plug. Otherwise use a suitable existing hole.
4. Alternatively, you can drill a new hole, but use great caution - be aware of lines and anything else behind where you drill.

NOTE: For better water drainage, be sure to route the drain hose out of the truck in the most direct line possible.

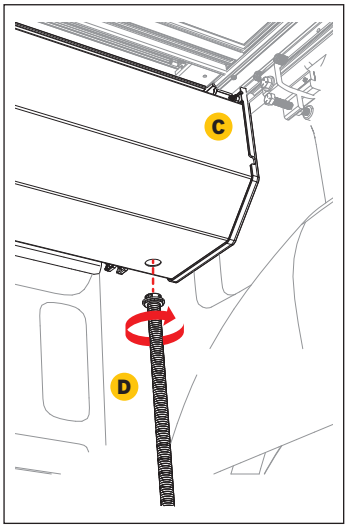

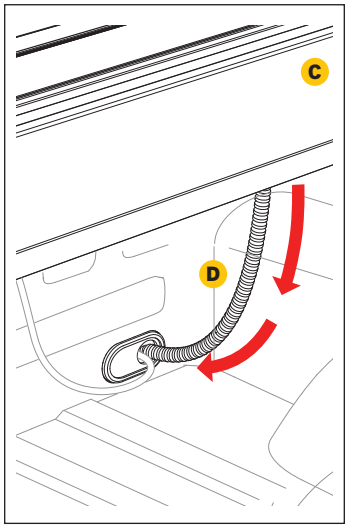

©RealTruck Group, Inc., 2026

21 Trim and install the T-slot seal.

Parts Needed

M 1x T-slot seal

1. Use scissors or a utility knife to cut the T-slot seal (M) into two pieces, both to the length of the rail minus the end caps, as shown.
2. Insert the seals into the T-slot on each rail from the top.

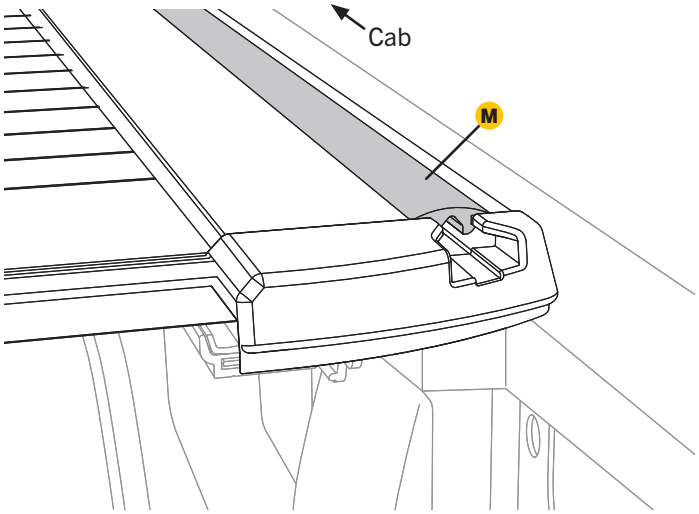

22 Reconnect the negative battery cable and fuse. ⚠

1. Use a ratchet and necessary socket to connect the negative (-) terminal on the main wiring harness to the ground on/near the battery.
2. Reinsert the 30A fuse into the fuse holder.

IMPORTANT: Fuse rating is APR-30A.

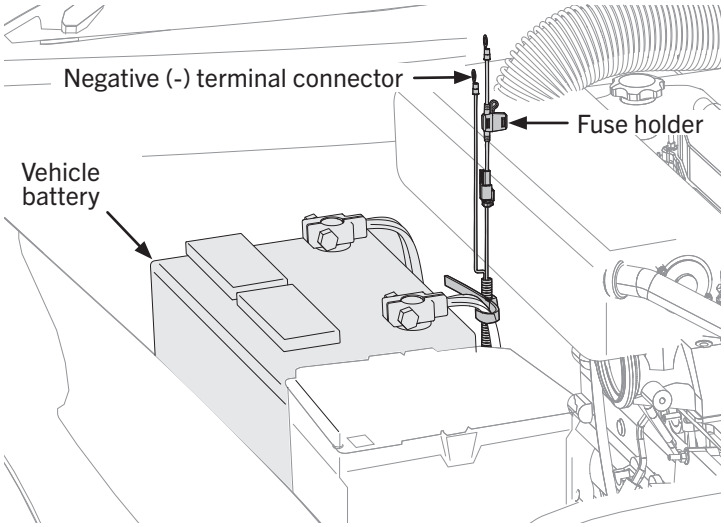

©RealTruck Group, Inc., 2026

CALIBRATING THE TONNEAU COVER SYSTEM

Parts Needed

L 1x Remote kit

Read before calibrating:

- Perform this step after the cover is installed.
- To calibrate the drive cables, they must traverse the length of the rail in both directions. While in calibration mode, the cover and/or drive cables will travel at a slower than normal speed.
- The calibration process will need to be performed every time the system enters pairing mode, or if the power is reset to the cover module.
- You can perform the calibration process if at any time the carriages become unaligned with one another.
- While performing the calibration process, the Anti-Pitch feature of the cover will not function.
- You can complete the calibration process with or without the cover connected to the drive carriages. We recommend performing the initial calibration cycle with the cover disconnected from the carriages.

---

1. Disconnect the cover from the drive carriages in each rail.
2. Press the “close” button 2 times on the Remote (L) to send the carriages down to the tailgate end of the side rails.
3. Once the cables have reached the tailgate end of the rails and stopped moving, press the “open” button 2 times on the remote (L). The drive carriages should return to the cab end of the cover.

NOTE: As the carriages reach the tail panel of the cover, they will engage and the calibration process is complete.

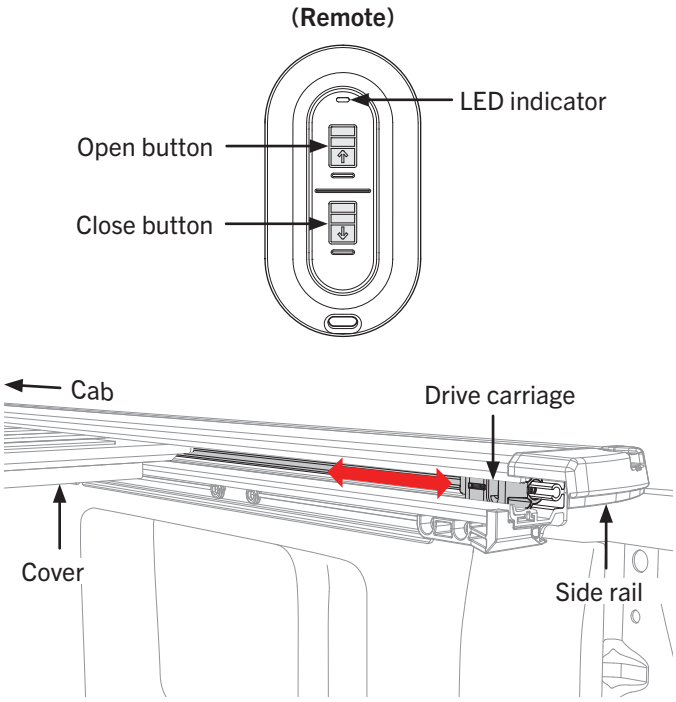

REMOTE KIT MOUNTING OPTIONS

1. Use the adhesive strip for mounting in truck beds or hard surfaces inside of the cab.
2. Use the attachment clip for mounting on a sun visor inside the vehicle.

IMPORTANT: Clean the mounting area on hard surfaces before applying adhesion strip.

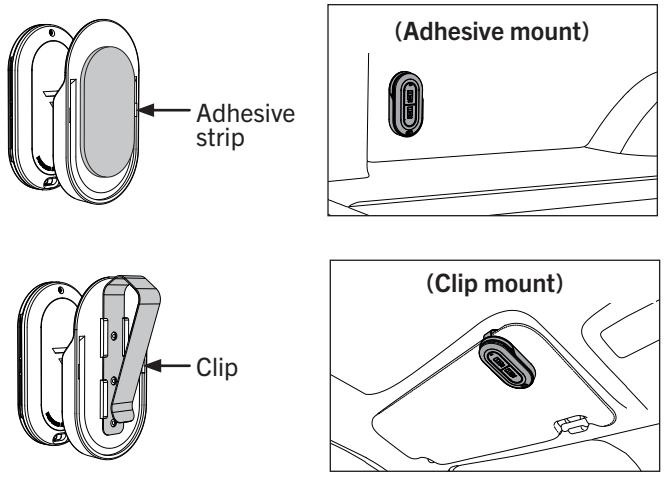

©RealTruck Group, Inc., 2026

MANUAL DISCONNECT GUIDE

1. To operate the manual disconnect, first locate the knob on the underside of the cover. Next, rotate the knob 1/4 turn to disengage the cover from the drive system. While holding the knob in the retracted position, push or pull the cover. The cover should move freely.
2. To re-engage the cover to the drive system, push or pull the knob 1/4 turn again and manually push the cover back into engagement with the drive system. Alternatively, follow the steps below for the automatic cover connection

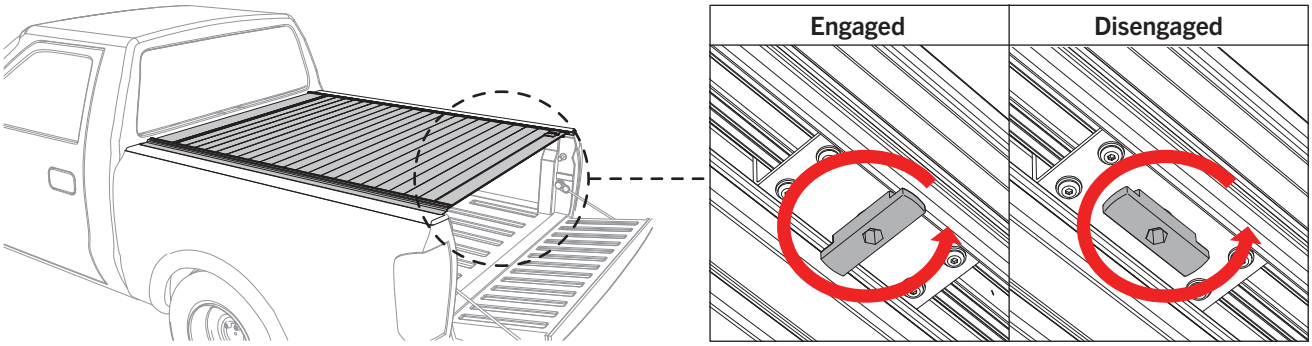

TROUBLESHOOTING

1. To create more of a seal between the cover (C) and the tailgate, back the set screws out.

NOTE: It is paramount to move each set screw the same number of turns. For example, to bring the cover 1/8" (3.2 mm) closer to the tailgate, back each set screw out 2.5 revolutions.

IMPORTANT: Make sure the set screws are not backed out too far, or the cover will not make contact with the cover stops, which is not advised.

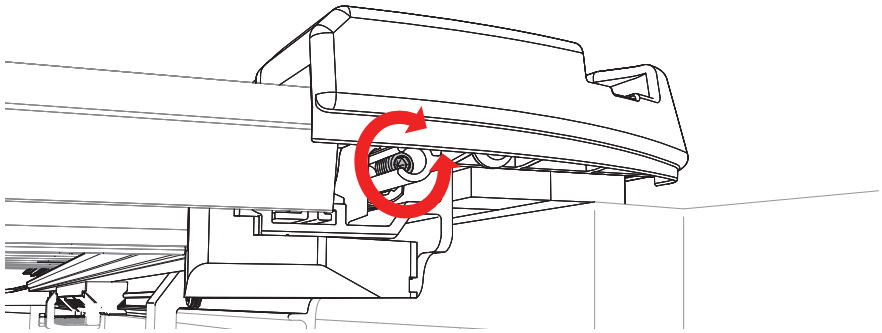

AUTOMATIC COVER CONNECTION

1. With the cover in the disengaged state, operate the cover electronically with the key fob, keypad, or phone, so that the drive system brings the carriage in both rails toward the stationary cover.
2. Once the carriages reach the tail slat end of the cover, the cover will start moving and snap into engagement. Cycle the cover to the fully open or fully closed position to ensure proper cover engagement.

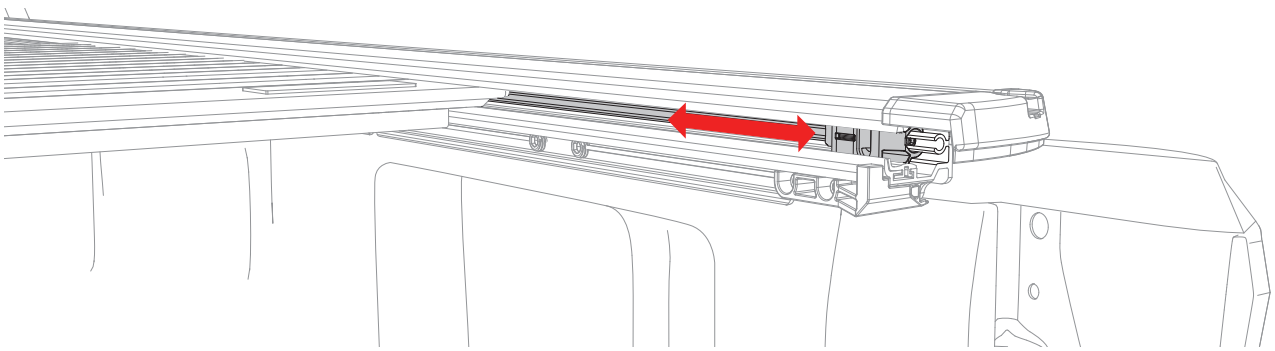

©RealTruck Group, Inc., 2026

CARE AND MAINTENANCE

- While performing the calibration process, the Anti-Pitch feature of the cover will not function.
- Clean with mild automotive soap and water only. Do not use any strong chemicals or cleaners.
- Do not wax your Retrax cover. The weather-stripping on your cover may absorb soapy residue from a car wash, so we recommend wiping down the inside of your rails from time to time.
- If you drive frequently in dusty conditions, periodically clean dirt and dust from inside the rails and spiral canister with a wet towel. To further improve cover performance, you can apply a thin film of plastics-safe, silicone-based lubricant.
- Periodically check that the cover is securely attached to your truck bed. Inspect the clamps and front mounting bolts to make sure they were properly installed and have not come loose or been knocked out of adjustment during operation. Covers that are used with high frequency, or that are subject to vibrations and impact from rough roadways, may require adjustment.

Remote operation and battery replacement

If the LED indicator on the remote does not light up, you may need a new battery. The remote uses a CR2450 button battery.

1. To replace the battery, remove the screw from the back of the case. Locate the small notch along the outer seam.
2. Insert a flat tool, like a coin or screwdriver, and gently twist it side to side to separate the plastic halves.

   IMPORTANT: Do not pull the casing apart from just one spot. This can snap the internal plastic clips.
3. Check the battery orientation. Look at whether the positive (+) or negative (-) side of the coin battery faces up before removing it. Slide a fingernail or a small plastic tool under the battery to lift it out of its slot.
4. Replace the battery, then align the front and back plastic shells and squeeze them together tightly until you hear them click closed on all sides.

Bed light operation

The remotes have a range of up to 200 feet in optimal conditions. Objects in the way or signal congestion may weaken the signal. The bed light turns on while the cover is in motion and turns off 20 seconds after movement stops.

1. To turn on the bed light, press both buttons on the remote at the same time for 2 to 4 seconds. The bed light stays on for 8 minutes and turns off automatically.

Using the cover with the remote

1. Press the close button two times to close the cover.
2. Press the open button two times to open the cover.

Cinch mode

Use cinch mode to secure loose cargo in place against the tailgate.

1. Press the close button two times. The cover will meet resistance and retract a couple of inches.
2. Press the close button two times again. The cover will close and cinch the cargo in place.

Remotes

If your remotes are stolen, lost, or destroyed, call customer service to purchase a new remote kit and instructions on how to erase all remotes from memory and pair the new remotes.You can pair up to 4 remotes to the cover at one time. If you need more remotes, call customer service to purchase an extra remote kit and instructions on how to pair the new remotes. If the remotes do not operate the cover, a factory reset may be needed. Call customer service for reset instructions.

⚠ SAFETY INSTRUCTIONS

- Do not tow your vehicle from the rear with the cover on your vehicle. If towing from the rear is required, remove the cover from the vehicle and store it properly.
- Secure all large and heavy cargo with straps.
- Never allow children or pets to occupy the truck bed while the cover is closed.
- The cover is not airtight. Special care is required to keep cargo clean and dry.
- Tonneau covers won't prevent theft of contents inside the truck box.

©RealTruck Group, Inc., 2026

LIMITED WARRANTY

For warranty information and registration, scan the QR code or visit https://realtruck.com/warranty-policies/

WARRANTY INFORMATION & REGISTRATION

INSTALLATION INSTRUCTIONS

For a digital copy of your installation guide, scan the QR code or visit https://realtruck.com/installation-instructions/

DIGITAL INSTRUCTIONS

©RealTruck Group, Inc., 2026

Part# 4000-319 Rev. 9-10-26